Final

Work Plan / Site Safety Submission
Volume III - Agency Plans
Chemical Warfare Materiel Site EE/CA
Fort McClellan, Alabama

Contract No. DACA87 - 95 - D - 0018

Prepared for

U. S. Army Corps of Engineers
Huntsville Center

Presented by

PARSONS ENGINEERING SCIENCE, INC.
5390 Triangle Parkway
Suite 100
Norcross, Georgia 30092

September 2000

FORT MCCLELLAN CHEMICAL SITE EE/CA
WORK PLAN/SITE SAFETY SUBMISSION
VOLUME CONTENT SUMMARY

VOLUME I - WORK PLAN

EXECUTIVE SUMMARY

SECTION 1 PROJECT OVERVIEW

SECTION 2 WORK, DATA, AND COST MANAGEMENT PLAN

SECTION 3 INTRUSIVE EXCAVATION PLAN

SECTION 4 CHEMICAL DATA QUALITY MANAGEMENT AND FIELD SAMPLING PLAN

SECTION 5 SITE SPECIFIC GEOPHYSICAL INVESTIGATION PLAN

SECTION 6 ENVIRONMENTAL PROTECTION PLAN

SECTION 7 CONVENTIONAL ORDNANCE HANDLING PLAN

SECTION 8 INVESTIGATIVE DERIVED WASTE AND SCRAP MONITORING AND DISPOSAL PLAN

SECTION 9 MOBILIZATION & DEMOBILIZATION PLAN

SECTION 10 QUALITY CONTROL PLAN

Appendix A Statement of Work

Appendix B Comments and Responses

Appendix C Resumes of Key Staff and Contributors

Appendix D Glossary

Appendix E Explosives Safety Submission

VOLUME II - SITE SAFETY AND HEALTH PLAN

SECTION 1 INTRODUCTION

SECTION 2 SITE DESCRIPTION

SECTION 3 PURPOSE AND SCOPE OF FORT MCCLELLAN EE/CA PROJECT

SECTION 4 STAFF ORGANIZATION, QUALIFICATIONS, AND RESPONSIBILITIES

SECTION 5 JOB HAZARD ANALYSIS

SECTION 6 ACCIDENT PREVENTION

SECTION 7 TRAINING

SECTION 8 PERSONAL PROTECTIVE EQUIPMENT

SECTION 9 MEDICAL SURVEILLANCE AND EMERGENCY MEDICAL SUPPORT

SECTION 10 ENVIRONMENTAL AND PERSONAL MONITORING

SECTION 11 HEAT AND COLD STRESS

SECTION 12 SITE CONTROL

SECTION 13 PERSONNEL AND EQUIPMENT DECONTAMINATION

SECTION 14 EMERGENCY RESPONSE AND CONTINGENCY PLAN

SECTION 15 SOPs, ENGINEERING CONTROLS, AND SAFE WORK PRACTICES

SECTION 16 LOGS, REPORTS, AND RECORD KEEPING

Appendix A Safety Considerations During Trenching and Excavation

Appendix B Emergency Response and Fire Prevention Plan

Appendix C Example Forms for Site Safety and Health Activities

Appendix D Material Safety Data Sheets

Appendix E Personal Protective Equipment (PPE) Program for Fort McClellan

Appendix F Draft Memoranda of Agreement for Emergency Support

Appendix G Air Monitoring Plan For Industrial Chemicals (Parsons ES) and Chemical Agents

Appendix H Hearing Conservation Program
Appendix I Respiratory Protection Program
Appendix J Hazard Communication Program
Appendix K Lockout/Tagout Program
Appendix L Personnel and Equipment Decontamination Station SOPs
Appendix M Electrical Safety
Appendix N Confined Space Entry
Appendix O Medical Surveillance, Control/Access to Employee Medical Records and Emergency Care
Appendix P Safe Procedures for Handling, Storage and Use of Pressurized Cylinders
Appendix Q Equipment and Vehicle Safety

VOLUME III - SUPPORTING AGENCY PLANS

INTERIM HOLDING FACILITY PLAN - PMNSCM .....
TECHNICAL ESCORT UNIT SUPPORT PLAN - TEU .....
PROTECTIVE ACTION PLAN - Mobile District Corps of Engineers .....

U.S. Army
Program Manager for
Chemical Demilitarization

Product Manager for
Non-Stockpile Chemical Materiel

Fort McClellan, Alabama
Interim Holding Facility Plan

Final
Revision 1

December 1999

EXECUTIVE SUMMARY

This Interim Holding Facility (IHF) Plan provides a scope of effort intended to support the onsite transportation and storage of recovered chemical warfare materiel (CWM) at Fort McClellan (FTMC), Alabama. This IHF Plan was prepared in conjunction with the Site Safety Submission.

The U.S. Army Program Manager for Chemical Demilitarization (PMCD) is responsible for the destruction of all United States CWM. The Product Manager for Non-Stockpile Chemical Materiel (PMNSCM) is responsible for destroying non-stockpile chemical materiel (NSCM) which includes recovered CWM. The PMNSCM will support the U.S. Army Corps of Engineers, Mobile District (CESAM) and the U.S. Army Technical Escort Unit (TEU) activities at FTMC. The onsite transportation and storage of recovered CWM is the responsibility of PMCD.

The PMCD is committed to public input and to timely and accurate information exchange with all stakeholders. This commitment includes a continuing pro-active public outreach and involvement program. PMCD Public Outreach and Information Office (POIO) has initiated a national strategy that encompasses exchanging information with partners at the national, regional, and local levels prior to initiating disposal or treatment options.

Telephone numbers and points of contact for FTMC and the U.S. Army Engineering and Support Center, Huntsville (CEHNC) are located in section 8 of this IHF Plan.

For additional information and comments, contact:

Mr. Bob Jones
Project Manager for Non-Stockpile Chemical Materiel
Attn: SFAE-CD-P
Aberdeen Proving Ground, Maryland 21010-5401
Phone: 800-488-0648 or 410-436-7439
FAX: 410-436-8738
rjones@c-pmcd.apgea.army.mil.

FTMC is located in eastern Alabama approximately half way between Birmingham, Alabama, and Atlanta, Georgia.

If CWM is recovered during the remedial investigation, it will be stored in an IHF at FTMC. Currently, the State of Alabama will not allow offsite transport to another chemical storage site within the state, therefore any recovered CWM will remain in storage at FTMC until onsite disposal equipment can be brought to the site. This option will be reevaluated at the conclusion of the project to ensure it remains the most prudent alternative.

The IHF hazard analysis (HA) presented in annex A examines the risks associated with onsite transportation and storage of recovered CWM. Potential incidents are discussed qualitatively and procedures that may be implemented to mitigate the incidents are provided. To assign quantitative values to potential risk, risk assessment codes (RACs) are identified for each potential accident scenario. The HA concludes that the CWM should not challenge the integrity of the IHF, the IHF protects the public and environment, and the operation can be safely performed. In addition, the total carrier accident risk for transporting CWM onsite is 1.67×10^{-7}.

The HA is based on the storage of five MRCs in the IHF: three MRCs containing chemical agent identification set (CAIS) items [one with mustard agent (H or HD), one with lewisite (L), and one with nitrogen mustard (HN-1)]; one MRC containing either a

155mm projectile containing sarin (GB), HD, or phosgene (CG), or a 4.2-inch mortar containing HD or CG; and one MRC containing a drum with 5 gallons of HD.

The maximum credible event (MCE) is defined as a worst-case accident scenario resulting in the release of chemical warfare agent and has a reasonable probability of occurrence. An accident scenario meeting the requirement of being credible and leading to a release of agent was not identified by the HA, which considered accident scenarios relating to storage, handling, and onsite transportation of recovered CWM sealed inside MRCs.

(This page intentionally left blank.)

TABLE OF CONTENTS

Section/Paragraph	Title	Page
EXECUTIVE SUMMARY		i
LIST OF ILLUSTRATIONS		ix
LIST OF TABLES		ix
1	INTRODUCTION	1-1
1.1	Objectives	1-1
1.2	Assumptions	1-1
1.3	Interim Holding Facility Regulatory Requirements	1-3
1.4	Background	1-4
1.5	Potential Chemical Warfare Materiel	1-5
2	ORGANIZATION	2-1
2.1	U.S. Army Program Manager for Chemical Demilitarization	2-1
2.2	Fort McClellan	2-1
2.3	U.S. Army Corps of Engineers, Mobile District	2-1
2.4	U.S. Army Engineering and Support Center, Huntsville	2-1
2.5	U.S. Army Soldier and Biological Chemical Command/U.S. Army Technical Escort Unit/U.S. Army Edgewood Chemical Biological Center	2-3
3	INTERIM HOLDING FACILITY DESCRIPTION	3-1
3.1	Background	3-1
3.2	Interim Holding Facility Location and Accessibility	3-1
3.2.1	Location	3-1
3.2.2	Roads	3-1
3.2.3	Through Traffic	3-2
3.3	Interim Holding Facility Construction	3-2
3.3.1	Design and Construction Materials	3-2
3.3.2	Ventilation	3-2
3.3.3	Monitoring Ports	3-2
3.3.4	Fire Suppression System	3-3
3.3.5	Lightning Protection	3-3
3.4	Interim Holding Facility Requirements	3-3
3.4.1	Electrical Power	3-3
3.4.2	Physical Security Requirements	3-4
3.4.3	Water	3-5
3.4.4	Communication	3-5
3.5	Interim Holding Facility Equipment	3-5
3.5.1	Handling Equipment	3-5
3.5.2	Safety Equipment	3-6

TABLE OF CONTENTS (Continued)

Section/Paragraph	Title	Page
4	IHF ACTIVITIES	4-1
4.1	General	4-1
4.1.1	Personal Protective Equipment	4-1
4.1.2	Training	4-1
4.1.3	Contingency Planning	4-4
4.1.4	Onsite Transportation	4-4
4.2	Preactivation Activities	4-4
4.2.1	Inspect IHF	4-5
4.2.2	Inspect Equipment	4-5
4.2.3	Inspect Records/Reports Procedures	4-9
4.2.4	Transportation Route	4-10
4.3	Predeparture Activities	4-10
4.3.1	Cargo Configuration and Order of Movement	4-10
4.3.2	Safety Briefing and Route Plan	4-10
4.3.3	Verify Contingency Personnel and Systems in Place	4-10
4.3.4	Execute Loading Procedures	4-10
4.3.5	Inspect and Monitor Containers	4-10
4.3.6	Initiate Chain of Custody	4-11
4.3.7	Perform Communications Check	4-11
4.3.8	Give Notification of Departure	4-11
4.4	En Route Activities	4-11
4.4.1	Mechanical Problems	4-11
4.4.2	Accident without Damage to Cargo	4-11
4.4.3	Accident with Damage to Cargo	4-12
4.4.4	Public Disturbance or Traffic Obstruction	4-12
4.5	Prearrival Activities	4-12
4.5.1	IHF Inspection	4-12
4.5.2	IHF Open and Close Procedures	4-12
4.6	Arrival Activities	4-14
4.6.1	Pretransfer Activities	4-14
4.6.2	CWM Transfer Activities	4-15
4.6.3	Post-Transfer Activities	4-19
4.7	Support Activities	4-19
4.7.1	IHF Surveillance, Maintenance, and Repair	4-19
4.7.2	Security	4-19
5	MONITORING	5-1
5.1	Types of Monitoring	5-1
5.1.1	First Entry Monitoring	5-1
5.1.2	Surveillance Monitoring	5-1
5.1.3	Contingency Monitoring	5-3
5.1.4	Monitoring During Onsite Transportation	5-11

TABLE OF CONTENTS (Continued)

Section/Paragraph	Title	Page
5.2	Roles and Responsibilities	5-11
5.3	Monitoring Chemicals of Concern	5-12
5.3.1	Chemical Agents	5-12
5.3.2	Industrial Chemicals	5-13
5.4	Monitoring Devices	5-14
5.4.1	MINICAMS®	5-14
5.4.2	Depot Area Air Monitoring System	5-14
5.4.3	Colorimetric Techniques	5-14
6	EMERGENCY RESPONSE CONTINGENCY PLAN	6-1
6.1	Introduction	6-1
6.2	Objective	6-1
6.3	Notifications	6-2
6.4	Interim Holding Facility	6-3
6.4.1	Contingency Planning	6-3
6.4.2	Personnel	6-3
6.4.3	Emergency Response Resources	6-4
6.5	Contingency Plans	6-5
6.5.1	Hazards Associated with Chemical Warfare Materiel	6-5
6.5.2	Fire	6-8
6.5.3	Medical Emergencies	6-10
6.5.4	Local Hospitals	6-11
6.5.5	Hazardous Material Handling	6-11
7	ROLES AND RESPONSIBILITIES	7-1
7.1	U.S. Army Program Manager for Chemical Demilitarization	7-2
7.2	U.S. Army Corps of Engineers, Mobile District	7-3
7.3	U.S. Army Soldier and Biological Chemical Command/Technical Escort Unit/Edgewood Chemical Biological Center	7-4
7.4	U.S. Army Engineering and Support Center, Huntsville	7-5
7.5	Fort McClellan	7-5
8	PUBLIC OUTREACH	8-1
9	CONCLUSIONS	9-1

ANNEX A INTERIM HOLDING FACILITY HAZARD ANALYSIS
ATTACHMENT A-1 HAZARD CONTROL LOG WORKSHEETS
ATTACHMENT A-2 DERIVATION OF TRUCK ACCIDENT RATES
ANNEX B CHEMICAL AND PHYSICAL DATA

TABLE OF CONTENTS (Continued)

Section/Paragraph	Title
ANNEX C	MATERIAL SAFETY DATA SHEETS
ANNEX D	HAZARDOUS WASTE MANIFEST FORMS AND INSTRUCTIONS AND OTHER TRANSPORTATION FORMS
ANNEX E	GLOSSARY OF TERMS
ANNEX F	ACRONYMS/ABBREVIATIONS
ANNEX G	REFERENCES
ANNEX H	QUESTIONS AND ANSWERS FOR FTMC IHF PLAN

LIST OF ILLUSTRATIONS

Figure	Title	Page
1-1	Location of FTMC	1-2
1-2	Location of IHF and Investigation Sites with Suggested Transportation Routes	1-6
2-1	Organization for FTMC IHF Plan	2-2
4-1	Fort McClellan IHF Inspection Checklist	4-6
4-2	DD Form 1911 (Materiel Courier Receipt)	4-16
4-3	Container Information Form	4-17
4-4	Interim Holding Facility Inventory Log	4-18
5-1	First Entry Monitoring	5-2
5-2	Example of a First Level Contingency Monitoring Array	5-6
5-3	Initial Monitoring During Emergency Response	5-7
5-4	Second Array Monitoring During Emergency Response	5-8
5-5	Emergency Response in No or Variable Wind Directions	5-9
5-6	Surveillance Monitoring of the Restriction Area	5-10

LIST OF TABLES

Table	Title	Page
5-1	Monitoring Equipment and Levels	5-4

(This page intentionally left blank.)

SECTION 1
INTRODUCTION

The Department of Defense (DoD) has designated the Department of the Army (DA) as the Defense Executive Agent for the destruction of all United States chemical warfare materiel (CWM). The U.S. Army Program Manager for Chemical Demilitarization (PMCD) has, in turn, been given the responsibility for destroying CWM. The Product Manager for Non-Stockpile Chemical Materiel (PMNSCM) is responsible for destroying the five categories of non-stockpile chemical materiel (NSCM), one of which is recovered CWM. This document examines the handling, onsite transportation, and temporary storage of recovered CWM at Fort McClellan (FTMC), Alabama. Figure 1-1 shows the location of FTMC.

1.1 Objectives

This Interim Holding Facility (IHF) Plan provides information about the plans to perform onsite transportation and storage of CWM in a safe, secure, and environmentally sound manner.

To support the premise that the CWM can be transported and stored safely, a hazard analysis (HA) was performed to evaluate the plans and procedures presented in this IHF Plan. The complete HA is presented in annex A.

1.2 Assumptions

When required, assumptions about site conditions and applicable regulations to CWM storage activities are made to complete the work assignment. This Plan was prepared using the following assumptions:

a. The recovered CWM is packaged in Department of Transportation (DOT)-approved containers known as multiple round containers (MRCs).

Figure 1-1. Location of FTMC

b. The recovered CWM is classified as hazardous waste by Army Regulation (AR) 50-6, Chemical Surety.

c. All required environmental studies and documentation will be determined and completed by FTMC in accordance with federal and state environmental laws and regulations prior to the execution of this Plan.

d. IHF-related operations will be performed in a manner that is protective of workers, the public, and the environment.

1.3 Interim Holding Facility Regulatory Requirements

IHF operations will follow DA and other regulatory guidelines. An evaluation of regulatory requirements that may be applicable to IHF operations is presented in the Generic Site Scoping Study [U.S. Army Chemical Materiel Destruction Agency (USACMDA, 1993)]. Some of the major requirements for this plan include the following:

a. The U.S. Environmental Protection Agency (USEPA) identification number must be obtained [40 Code of Federal Regulations (CFR) 264.11] by FTMC as a generator of the CWM.

b. Applicable federal and state requirements for worker training and for the storage of hazardous waste must be met. These requirements include those found in the Comprehensive Environmental Response, Compensation, and Liability Act (CERCLA) and the Occupational Safety and Health Act (OSHA).

c. Security guidelines in AR 190-11 and AR 50-6 must be followed.

d. The IHF must comply with the requirements for a hazardous waste storage facility, which include a secondary containment system

(40 CFR 264.175) and separate storage of incompatible wastes with separate containment structures (40 CFR 264.172).

e. CWM hazardous waste must be characterized according to 40 CFR 264.13, then manifested, labeled, and reported in accordance with 40 CFR 264.70 through 76, and applicable state regulatory requirements.

f. Appropriate signs must be posted restricting access to the facility (40 CFR 264.14).

g. Inspection procedures (40 CFR 264.15) for the IHF must be recorded and available onsite for inspection (40 CFR 264.74).

h. All facility personnel involved with hazardous waste management must be properly trained in Hazardous Waste and Emergency Response (HAZWOPER) in accordance with 40 CFR 1910. Personnel must be familiar with 40 CFR 264.50 through 56 to deal with emergency procedures and activate a facility contingency plan.

i. The Alabama Department of Environmental Management (ADEM) will regulate the IHF according to hazardous waste regulations found in ADEM Administrative Code 335-14.

1.4 Background

FTMC began as an artillery range for the Fourth Alabama Artillery during the Spanish American War. It was established as Camp McClellan during World War I and became FTMC in 1929. The Chemical Corps School was established at FTMC in 1951 and deactivated in 1973. Two major areas at FTMC involved the use of chemical agents: the Chemical Corps School and Replacement Center for the Chemical Corps, which

was active from 1951 to 1973; and the U.S. Army Combat Developments Command Chemical, Biological, Radiological Agency, which was active from 1962 to 1973.

Potential CWM that may exist at FTMC is a result of training exercises conducted by the Chemical Corps School. These exercises trained soldiers to handle chemical munitions, to detect contamination, and to conduct decontamination.

Fieldwork for a remedial investigation/feasibility study (RI/FS) began in April 1994. To date, no chemical warfare agents or their breakdown products have been detected. The current project involves investigation of 14 sites. Work at nine of these sites will involve excavation of pits or trenches. Four of the nine sites where excavations will be performed may contain buried chemical munitions (sites 1, 2, 3, and 14 in figure 1-2). Also, one site (site 2) may contain a buried mustard drum. Figure 1-2 shows the location of the 14 sites. The figure also indicates proposed transportation routes from the four sites where munitions or a mustard drum may be recovered to the IHF.

FTMC is in the process of being closed under the provisions of the Base Realignment and Closure (BRAC) Program. By the time this IHF Plan is implemented, most of the military activities at FTMC will have ceased and the installation will be under the control of a BRAC Office with a BRAC Environmental Coordinator exercising responsibility for environmental matters.

1.5 Potential Chemical Warfare Materiel

For purposes of developing this plan and conducting the HA, it is assumed that five MRCs containing items recovered from four different locations will be stored in the IHF. The five MRCs consist of:

- An MRC 7 x 27 containing recovered CAIS items filled with mustard (H or HD)

- An MRC 7 x 27 containing recovered CAIS items filled with lewisite (L)

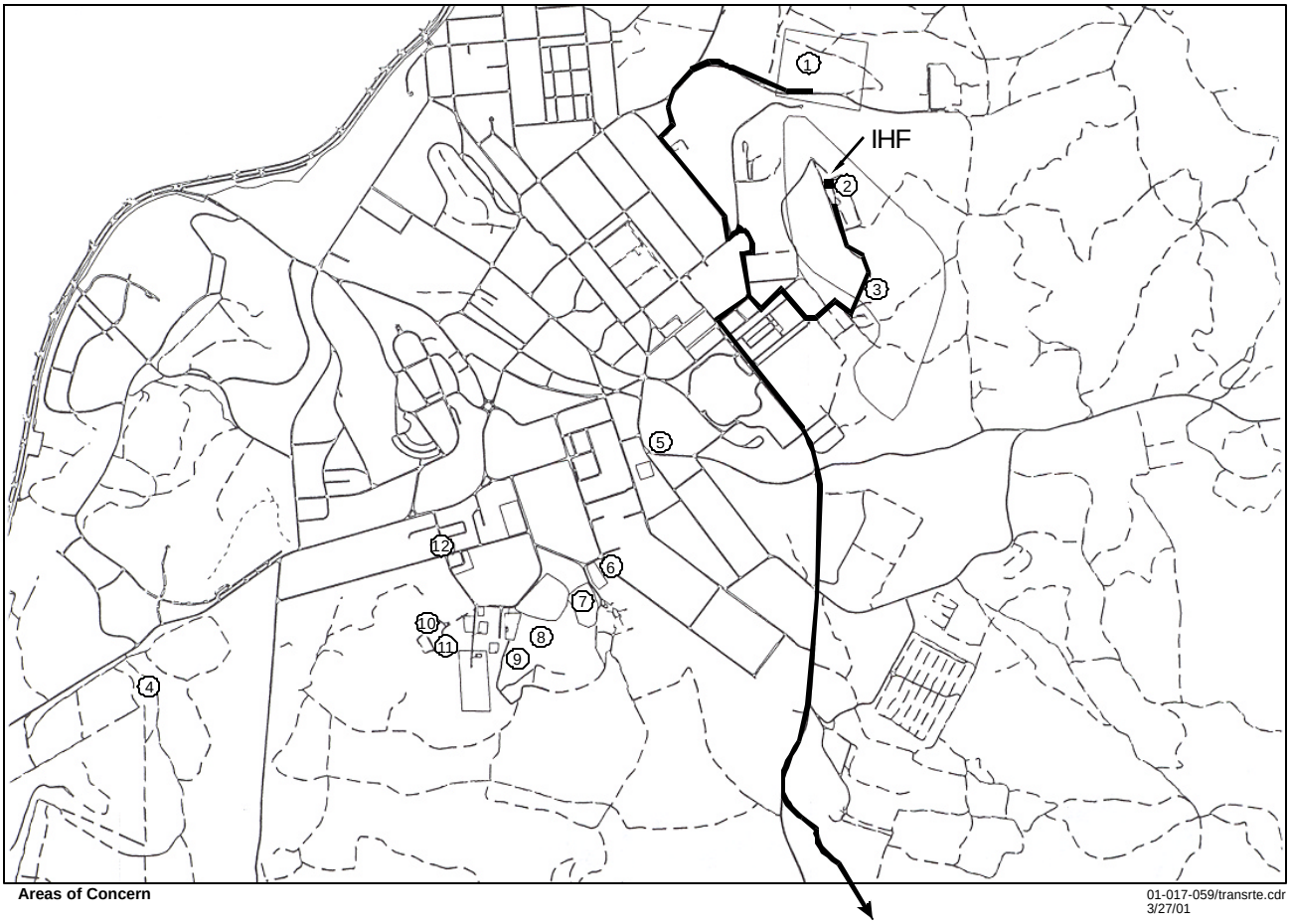

Areas of Concern

01-017-059/transrte.cdr
3/27/01

1. Training Area 31
2. T-38 (Reservoir Ridge)
3. Smoke Ranges
4. T-4 Biological Warfare Area
5. Agent ID Area
6. Cane Creek Training Area
7. Naylor Field
8. Blacktop Training Area
9. Dog Training Area
10. Old Burn Pit
11. Field Personnel Decontamination Area
12. Old Toxic Training Area
13. Five Mustard Spill Sites (Not Shown)
14. Range 24A

Figure 1-2. Location of IHF and Investigation Sites with Suggested Transportation Routes

- An MRC 7 x 27 containing recovered CAIS items filled with nitrogen mustard (HN-1)

- An MRC 7 x 27 or an MRC 9 x 41 containing either a recovered 155mm projectile filled with sarin (GB), HD, or phosgene (CG) or a recovered 4.2-inch mortar filled with either HD or CG.

- An MRC 12 x 56 or 55-gallon drum overpack containing a recovered can or drum of HD.

Regarding the CAIS, it is possible that items from several types of CAIS may be found. CAIS contain a variety of chemical agents and industrial chemicals that are either neat, in solution, or adsorbed to charcoal. Possible chemical agents include H, HD, L, and HN-1. The industrial chemicals include chloroform (as a solvent for other chemicals), CG, cyanogen chloride (CK), chloropicrin (PS), and tabun (GA)-simulant.

A brief description of various CAIS is presented as follows:

a. *K951/952 Gas Identification Set, Instructional, M1.* Contains forty-eight 1.4-ounce Pyrex ampules: 12 containing 5 percent H in chloroform, 12 containing 5 percent L in chloroform, 12 containing 50 percent PS in chloroform, and 12 containing CG.

b. *K953/954 War Gas Identification Set, Instructional, AN-M1A1.* Contains eight 1.4-ounce ampules each of CG, L (5 percent in chloroform), HD (5 percent in chloroform), CK, HN-1 (10 percent in chloroform), and GA-simulant (a mixture of benzonitrile, diethyl malonate, heptanoic acid, ethyl caprate, ethyl myristate, and ethyl heptanoate).

c. *K941, Toxic Gas Set, M1.* Contains 24 glass bottles, each containing 3.5 ounces of H or HD.

d. *K942, Toxic Gas Set.* Consists of 28 heat-sealed glass bottles. Each bottle is 1.875 inches in diameter and approximately 4.625 inches long containing 3.8 ounces of neat HD.

Only recovered CAIS items confirmed or suspected of containing chemical agents will be placed inside an MRC and stored in the IHF.

Based on the history of FTMC, only two types of munitions are considered: a 155mm projectile and a 4.2-inch mortar. The 155mm projectile might contain either GB, HD, or CG. The 4.2-inch mortar might contain HD or CG. If any of these items are recovered, they will be stored in the IHF. There is no record of armed munitions filled with chemical agents being fired at FTMC. Therefore, it is not expected that any armed CWM munitions will be recovered. If any are discovered, explosive ordnance disposal personnel will be notified.

Finally the plan considers the possibility of recovering a drum containing up to 5 gallons of HD.

In summary, the potential chemical agents and industrial chemicals that may be recovered at FTMC are H or HD, L, HN-1, CG, CK, PS, GA-simulant, and GB. Only items confirmed or suspected of containing chemical agent H, HD, L, or GB (and CG if found in a munition) will be stored in the IHF. CAIS Items confirmed of containing industrial chemicals (CG, CK, PS, or GA-simulant) will be turned over to U.S. Army Corps of Engineers, Mobile District (CESAM) for disposal as non-chemical agent hazardous wastes.

The chemical and physical properties of the chemicals that might be recovered and stored in the IHF are presented in annex B. Health and safety information is provided in the Material Safety Data Sheets (MSDSs) or equivalent document in annex C.

Throughout the rest of this document, the term CWM will be used to refer to any or all of the recovered items unless the information being presented is peculiar to only one agent or item. In those cases, the particular agent or item will be identified.

(This page intentionally left blank.)

SECTION 2
ORGANIZATION

The primary organizations that will participate in IHF activities are presented in figure 2-1. Specific details of each organization's roles and responsibilities are provided in section 7.

2.1 U.S. Army Program Manager for Chemical Demilitarization

PMCD has the program responsibility for ensuring that the onsite transportation and storage of CWM at FTMC are accomplished in a safe and environmentally acceptable manner.

2.2 Fort McClellan

Fort McClellan will ensure that public outreach, medical support, physical security, and backup emergency response are available for IHF operations. FTMC is considered to be the generator of the recovered CWM, but will allow the U.S. Army Technical Escort Unit (TEU) to manage the CWM during storage in the IHF.

2.3 U.S. Army Corps of Engineers, Mobile District

CESAM is conducting the remedial investigation at FTMC. CESAM is responsible for oversight of its contractors.

2.4 U.S. Army Engineering and Support Center, Huntsville

The U.S. Army Engineering and Support Center, Huntsville (CEHNC) is the Army Center of Excellence for unexploded ordnance and will provide support to CESAM for intrusive investigation of the suspect CWM sites. CEHNC will have oversight of its

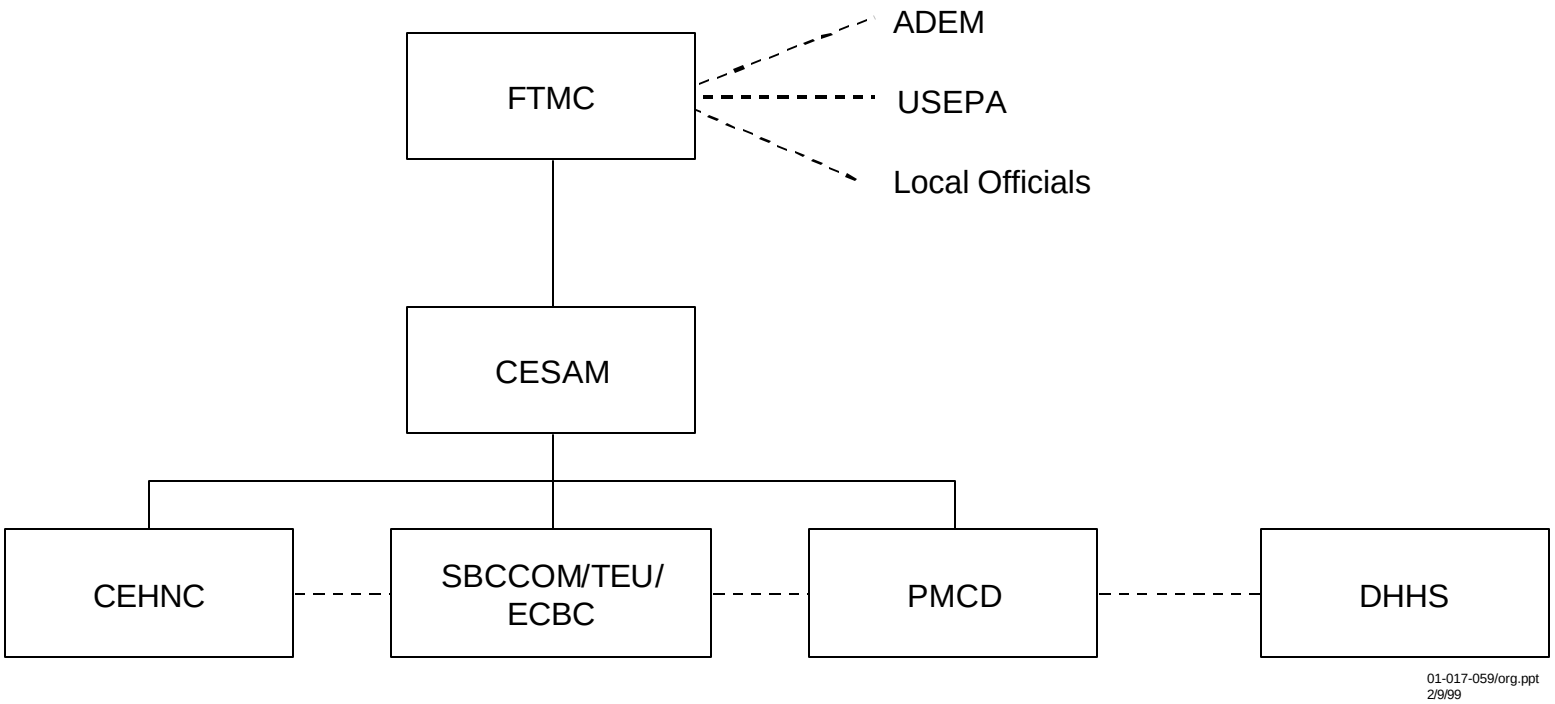

Figure 2-1. Organization for FTMC IHF Plan

contractor for work at the investigation sites. CEHNC and its contractor will provide support to TEU during a CWM recovery operation.

2.5 U.S. Army Soldier and Biological Chemical Command/U.S. Army Technical Escort Unit/U.S. Army Edgewood Chemical Biological Center

The TEU and other elements of the U.S. Army Soldier and Biological Chemical Command (SBCCOM) will be responsible for providing support for CWM recovery at FTMC, as well as for supporting the CEHNC during intrusive activities at the investigation sites. If CWM is discovered, the TEU will perform recovery and take physical custody of recovered CWM for assessment, packaging, onsite transportation, and storage in the IHF. The TEU will advise and respond as needed in emergency situations involving CWM.

The U.S. Army Edgewood Chemical Biological Center (ECBC) will provide monitoring and laboratory services for identification of CWM. A private contractor will be used for hazardous waste characterization and to run split samples with ECBC for CWM determinations. ECBC may also provide material handling equipment (such as a crane) for use during IHF operations.

(This page intentionally left blank.)

SECTION 3
INTERIM HOLDING FACILITY DESCRIPTION

3.1 Background

The IHF will be operated at FTMC to store the CWM that has been recovered during remedial investigation operations. The purpose of the IHF is to provide safe, secure, and segregated storage of recovered CWM. Figure 1-2 shows the location of the IHF at FTMC.

3.2 Interim Holding Facility Location and Accessibility

3.2.1 Location. The FTMC IHF will be located at Facility 355, which is a fenced area adjacent to the FTMC hazardous waste storage area (Bldg. 348).

3.2.2 Roads. Roads to the IHF from main roads are passable and will be maintained as passable for equipment and vehicles that will be used in mobilization, operation, and demobilization of the IHF. Anticipated vehicles with special requirements for road weight and overhead clearance are:

a. Tractor with 40-foot trailer, 60,000-pound road weight and 13.6-foot overhead clearance (to deliver the IHF to the site)

b. A 20-ton mobile crane, 51,000-pound road weight, with 11-foot overhead clearance (to off-load the IHF from its transport vehicle).

During implementation of this IHF Plan, FTMC will ensure that IHF access roads are maintained to meet the needs of the anticipated traffic. There is sufficient turnaround capability for the most demanding vehicle anticipated at the IHF site.

3.2.3 Through Traffic. The IHF site is fenced and the gate is controlled to preclude access by unauthorized persons.

3.3 Interim Holding Facility Construction

3.3.1 Design and Construction Materials. The IHF (see figure 5-1) is a portable storage building designed to store hazardous waste. The building is 8 feet wide by 16 feet long by 8 feet high and is capable of being transported on a flatbed truck without special DOT permits. The weight and size of the building require it to be loaded and unloaded with a 20-ton crane.

The interior of the IHF is approximately 100 square feet of clear space for storage and walkway. This area is sufficient to store up to 15 containers with a 15 x 15-inch footprint and to provide enough room to maneuver the containers within the building. A secondary containment sump is located below the floor and is equipped with an accessible exterior drain. The building has interior and exterior light fixtures. The door is located in the center on the long side of the building and is equipped with two hooded, high security locking hasps to accommodate padlocks.

3.3.2 Ventilation. The IHF is ventilated by passive airflow through louvered vents located on each end. The controls for the louvered vents are accessible from outside the IHF. The vents are normally closed when CWM is being stored. The IHF is equipped with air conditioning.

3.3.3 Monitoring Ports. The IHF has two monitoring ports near the entry door, one 6 inches from the floor and one 6 inches from the ceiling, for sampling the interior air quality of the IHF. Each port is 2.5 inches in diameter and has a threaded cap, which allows the monitoring sample lines to be placed inside the IHF. When CWM is stored inside, the interior air quality of the IHF will be monitored before personnel enter. First entry monitoring procedures are discussed in section 5.

3.3.4 Fire Suppression System. The IHF is equipped with an internal self-actuating dry chemical fire suppression unit and is constructed with 2-hour fire-rated walls.

3.3.5 Lightning Protection. For the IHF to meet the requirements of AR 385-64, lightning protection will be installed in accordance with National Fire Protection Association (NFPA) Lightning Protection Code NFPA78, and testing of lightning protection will be done in accordance with Army procedures.

3.4 Interim Holding Facility Requirements

IHF requirements will be coordinated among PMCD, CESAM, FTMC, and CEHNC. CESAM will prepare the site to receive the IHF.

3.4.1 Electrical Power. A weather-protected distribution panel is located on the exterior of the IHF for connection of 100-ampere, 230/240-volt, single-phase, 60-cycle electrical service. The distribution panel is on the exterior to provide maintenance access without entering the IHF. The panel accommodates external outlets. All branch circuits are detailed inside the distribution panel.

The IHF is provided with one weather-protected external outlet positioned near the monitoring port. The outlet has ground fault interrupter circuit protection for operator safety.

The IHF is equipped with at least one waterproof interior light. The light fixture is Underwriters Laboratory (UL)-tested for class 1, division 1 hazardous locations. The light is rated for minimum of 100 watts and protected with metal guards. There is one interior light switch.

There is one externally mounted, photocell-activated lighting fixture on the front of the building. During periods of darkness, the exterior lighting is activated.

3.4.2 Physical Security Requirements. The IHF site will have the following physical security requirements to reduce potential vulnerabilities associated with the storage of recovered CWM at FTMC.

a. *Barriers.* A chain link fence surrounds the IHF site. The fence is a deterrent for casual observers and provides a clear boundary. TEU will verify that the fence is 6 feet high, constructed in accordance with commercial practice, and meets the requirements of this specification. The fence must be chain link (galvanized, aluminized, or plastic-coated woven steel) with 2-inch mesh, and 9 gauge diameter wire.

b. *Lighting.* Security lighting for the area will be provided by a fixture mounted on the outside of the IHF.

c. *Signs.* The fence surrounding the IHF must be posted with signs, which indicate that the area is restricted, dangerous, and that unauthorized entry is illegal. The signs must be approximately 18 x 24 inches and legible from a distance of 25 feet. A large sign (approximately 4 x 6 feet) describing the conditions of entry will be posted at the gate. The gate sign will read, "Danger-Unauthorized Personnel Keep Out." When chemical agents are actually being stored in the IHF, appropriate placards will be placed on the front of the IHF to show types of chemical agents present.

d. *Guard Force.* When CWM is in storage, CESAM will provide either a 24-hour armed guard or an intrusion detection system plus periodic surveillance including checking the security of the IHF gate and locks. Any out-of-the-ordinary circumstances will be immediately reported to FTMC, the TEU, and CESAM.

e. *Access Control.* When the IHF is being operated during receipt and storage of CWM, access controls will be implemented in the vicinity of the IHF so that direct access to recovered CWM will be limited to the TEU.

f. *Locks and Keys.* The gate to the fence around the IHF, as well as the doors to the IHF, will be locked when not in use. Using the proper locking hardware will provide significant delay for unauthorized entrance. TEU will maintain control of the keys to the IHF. The key to the gate in the security fence will be controlled by CESAM.

g. *Containment.* The CWM will be packaged in MRCs. Secondary containment will be provided by a built-in sump under the floor of the IHF.

3.4.3 Water. The IHF does not require connection to a water supply system. Each organization will provide drinking water for its workers. TEU will provide a portable eyewash station to be located outside of the IHF during operations. Water for fire protection and decontamination operations will be supplied by FTMC.

3.4.4 Communication. The IHF does not require installation of communication systems. Hand-held radios operating on an assigned frequency are the primary means of communication. Portable telephones may also be used.

3.5 Interim Holding Facility Equipment

3.5.1 Handling Equipment. The following CWM handling equipment will be available at the IHF:

a. *Dolly, Handcart.* To move MRCs into and around the inside of the IHF.

b. *Ramp.* A ramp is used to maneuver the dolly or handcart into and out of the IHF.

c. *Tool Kit.* Hammer, screwdrivers, pliers, and various small tools for minor repairs that may be required.

d. *Lift, 1,000-pound Capacity.* To remove larger objects from the vehicle and place them on the ground.

3.5.2 Safety Equipment. During operation of the IHF, safety equipment will be readily available to all workers. All equipment will be clearly marked, inspected to ensure operability, and conveniently located for use at the IHF. In addition to communications and lighting equipment mentioned previously, safety items that will be on hand include:

a. *Personal Protective Equipment.* Protective equipment will be available in the TEU response vehicle. The following list of items will be provided:

- Level B OSHA personal protective equipment (PPE)
- Gloves
- Eye protection
- Respirators.

b. *Eyewash.* A portable eyewash station will be located outside the entrance to the IHF.

c. *First-Aid Supplies.* A first-aid kit will be available onsite. It will be easily accessible, clearly displayed, and marked. A kit will be available in the TEU vehicle, as well.

d. *Fire Extinguishers.* Two ABC-rated fire extinguishers will be available. These are to be inspected to ensure operability.

e. *Spill Kit.* A spill kit will be available to provide quick and easy access in case of a material spill.

f. *Air Monitoring Equipment.* Air monitoring equipment includes devices for both low-level and gross-level detection. Section 5 describes the various types of monitoring equipment.

SECTION 4
IHF ACTIVITIES

4.1 General

This section covers training requirements for personnel involved in IHF operations, as well as the activities involved in the operation of the IHF and handling of the CWM. Recovery, storage, and onsite transportation of the CWM will be tracked and accurate records maintained.

4.1.1 Personal Protective Equipment. During CWM handling activities, TEU personnel will dress in OSHA Level D PPE with a slung mask, leather work gloves, and safety shoes. OSHA Level D may only be used if the following conditions are met and agent was not detected:

a. Materials were packaged within an MRC.

b. MRC and first entry monitoring were conducted in accordance with section 5 and agent concentrations were below 1.0 time-weighted average (TWA).

4.1.2 Training. Each agency participating in the IHF activities will provide an employee training program complying with, but not limited to, the requirements of 29 CFR 1910.120(e) and DA Pamphlet (Pam) 385-61. Training will be provided on hazardous waste operations, PPE use, heavy equipment operation (if needed), hazards of the chemicals that may be encountered, and any other topics of concern to the transportation activities. By the time this plan is implemented, all personnel will have completed at least 40 hours of training in health and safety issues associated with hazardous substance site work. Documentation of training requirements will be the responsibility of each agency.

4.1.2.1 Health and Safety Training. Health and safety training will be conducted prior to the job start up to ensure that personnel have a thorough understanding of the Emergency Response and Contingency Plan for the IHF activities (section 6), standing operating procedures (SOPs), and physical and chemical hazards of the site. The following topics will be addressed in the health and safety training:

a. Names and titles of employees and their duties

b. Persons responsible for safety and health

c. Acute and chronic effects of exposure to hazardous substances that may be present, potential routes of exposure for these substances, exposure limits, and the level of personal exposure that can be anticipated

d. Monitoring procedures and the functions, limitations, and maintenance of monitoring equipment

e. SOPs

f. Site control measures

g. PPE

h. Emergencies.

4.1.2.2 Site-Specific Training. Site-specific training will be provided by TEU for all employees, contractors, and subcontractors who have met the requirements of 29 CFR 1910.120. Site-specific training will include operational training and safety meetings.

4.1.2.3 Operational Training. TEU operational training will include procedures related to the storage of CWM. Topics addressed will include:

a. Handling CWM containers
b. Storing CWM
c. Storage emergency measures.

4.1.2.4 Safety Meetings. Personnel involved in the storage activities must attend a safety meeting at the beginning of the IHF operations. This meeting, conducted by the TEU, will include items such as specific health and safety issues, storage activities planned, changes in plans, PPE, personnel and equipment decontamination, potential chemical and physical hazards, and contingency actions.

4.1.2.5 Hazard Information Training.

a. *Hazard Communication Training.* In accordance with the OSHA Hazard Communication Standard (29 CFR 1910.1200 and 1926.59), copies will be available of MSDSs for each of the suspected hazardous chemical materials that are to be stored. The hazard communication training will be conducted in accordance with 29 CFR 1910.1200 and 1926.59. Training will include, but not be limited to, all hazards or potential hazards associated with transportation activities and any hazardous chemical materials to be stored.

b. *Chemical Warfare Materiel Training.* All personnel involved with storage of CWM will undergo training concerning the CWM, although site activity involving CWM or contamination resulting from these agents will only involve the TEU. The intent of this training is to inform all personnel of the hazards associated with CWM. The TEU personnel have undergone U.S. Army training required to qualify and maintain proficiency in their respective military and civilian occupational specialties.

4.1.3 Contingency Planning. If conditions are observed that threaten the health of the public, workers, or the environment, or if an agent leak is confirmed that requires immediate remedial action, a response will be performed in accordance with the Emergency Response Contingency Plan described in section 6 of this Plan and in the Site Safety Submission. The TEU will implement decontamination per TEU procedures. The site coordinator will notify the supervisory, emergency response, and contingency personnel who are not already at the storage facility to respond to an accident/incident. FTMC will be notified, and they will notify the regulators of any release of hazardous materials. Only the TEU and TEU authorized persons will enter the IHF while CWM is in storage.

4.1.4 Onsite Transportation. Onsite transportation at FTMC consists of moving the recovered and overpacked CWM from an investigation site to the IHF. From each site, the most direct route will be taken to the IHF that avoids uncessary transit through congested parts of the installation. Two escort vehicles may be used, one ahead of and one behind the cargo vehicle. All personnel participating in the transportation operation will receive a safety briefing by the TEU. Vehicle operators and assistant operators will have clear instructions and/or maps identifying the route they will follow. The TEU will verify that emergency response personnel are available, and that spill response kits and monitoring equipment are operational before execution of loading.

Preapproved procedures will be executed to load the overpack(s) onto the transport vehicle. Each overpack will be inspected and monitored to verify its integrity in accordance with section 5 of this Plan. Tie-downs and bracing will be inspected to ensure containers are adequately secured. A communication check will be made with each piece of communications equipment on each vehicle before departure, en route, and upon arrival at the IHF.

4.2 Preactivation Activities

Before activation of the IHF Plan, TEU will be responsible for ensuring that sufficient space is available for storage as planned. The facility manager will perform a

preactivation storage facility inspection of the IHF internal and external structure, IHF equipment, and IHF paperwork. The preactivation inspection procedures described below will be used in conjunction with the IHF Inspection Checklist (figure 4-1) which provides a more specific listing of the things that should be examined during an inspection. The results of the inspection will be reviewed with the TEU, PMNSCM, and the CESAM Site Safety Coordinator.

4.2.1 Inspect IHF. The storage facility manager will perform an internal and external inspection of the IHF.

a. Inspect IHF building for sound structure, water leaks, and cracks.

b. Inspect inside the IHF. Note any nonstandard conditions or deficiencies.

c. Confirm that no debris or prohibited materials (for example, paint, oil, rags, or tools) are present.

d. Confirm that aisles are adequate for CWM handling equipment and inspection.

4.2.2 Inspect Equipment. All handling equipment and safety equipment used for the CWM transfer and storage operations will be inspected to ensure that the needed equipment is on hand and operable.

a. Inspect emergency eyewash station. Water will be a steady flow and clear.

b. Confirm serviceability of radios and cellular phones. All features will be operating.

Fort McClellan

IHF Inspection Checklist

Period Covered: From _____ to _____

Inspector:
Date:
Time:

	MON		TUES		WED		THUR		FRI		SAT		SUN	
	Pass	Fail	Pass	Fail	Pass	Fail	Pass	Fail	Pass	Fail	Pass	Fail	Pass	Fail
Outside														
Signs posted on IHF entrance gate	☐	☐	☐	☐	☐	☐	☐	☐	☐	☐	☐	☐	☐	☐
Area secure, gate closed and locked, IHF door closed and locked	☐	☐	☐	☐	☐	☐	☐	☐	☐	☐	☐	☐	☐	☐
Storage Area														
Building structurally sound	☐	☐	☐	☐	☐	☐	☐	☐	☐	☐	☐	☐	☐	☐
Area clean of debris	☐	☐	☐	☐	☐	☐	☐	☐	☐	☐	☐	☐	☐	☐
Aisle space adequate for emergency response	☐	☐	☐	☐	☐	☐	☐	☐	☐	☐	☐	☐	☐	☐
All containers on pallets	☐	☐	☐	☐	☐	☐	☐	☐	☐	☐	☐	☐	☐	☐
All containers sealed	☐	☐	☐	☐	☐	☐	☐	☐	☐	☐	☐	☐	☐	☐
No leaks, spills, leaking containers, or residue	☐	☐	☐	☐	☐	☐	☐	☐	☐	☐	☐	☐	☐	☐
Containers turned so that labels are visible	☐	☐	☐	☐	☐	☐	☐	☐	☐	☐	☐	☐	☐	☐
Inspect container labels														
composition of waste	☐	☐	☐	☐	☐	☐	☐	☐	☐	☐	☐	☐	☐	☐
quantity of waste	☐	☐	☐	☐	☐	☐	☐	☐	☐	☐	☐	☐	☐	☐
generator	☐	☐	☐	☐	☐	☐	☐	☐	☐	☐	☐	☐	☐	☐
date of acceptance	☐	☐	☐	☐	☐	☐	☐	☐	☐	☐	☐	☐	☐	☐
Inspect secondary containment sumps	☐	☐	☐	☐	☐	☐	☐	☐	☐	☐	☐	☐	☐	☐

Figure 4-1. Fort McClellan IHF Inspection Checklist (Sheet 1 of 3)

Fort McClellan

IHF Inspection Checklist (Continued)

Period Covered: From _____ to _____

	MON		TUES		WED		THUR		FRI		SAT		SUN	
Inspector: Date: Time:	Pass	Fail	Pass	Fail	Pass	Fail	Pass	Fail	Pass	Fail	Pass	Fail	Pass	Fail
Equipment														
Emergency shower/eyewash operable	☐	☐	☐	☐	☐	☐	☐	☐	☐	☐	☐	☐	☐	☐
Absorbent available	☐	☐	☐	☐	☐	☐	☐	☐	☐	☐	☐	☐	☐	☐
Inspect fire extinguishers	☐	☐	☐	☐	☐	☐	☐	☐	☐	☐	☐	☐	☐	☐
Gloves available	☐	☐	☐	☐	☐	☐	☐	☐	☐	☐	☐	☐	☐	☐
Eye protection available	☐	☐	☐	☐	☐	☐	☐	☐	☐	☐	☐	☐	☐	☐
Respirators available	☐	☐	☐	☐	☐	☐	☐	☐	☐	☐	☐	☐	☐	☐
Protective clothing available	☐	☐	☐	☐	☐	☐	☐	☐	☐	☐	☐	☐	☐	☐
Spill kit available and complete	☐	☐	☐	☐	☐	☐	☐	☐	☐	☐	☐	☐	☐	☐
Tool kit available and complete	☐	☐	☐	☐	☐	☐	☐	☐	☐	☐	☐	☐	☐	☐
Records/Reports														
Waste logs complete, accurate and up-to-date	☐	☐	☐	☐	☐	☐	☐	☐	☐	☐	☐	☐	☐	☐
Manifests logged and filed	☐	☐	☐	☐	☐	☐	☐	☐	☐	☐	☐	☐	☐	☐
Copies of returned manifests	☐	☐	☐	☐	☐	☐	☐	☐	☐	☐	☐	☐	☐	☐
Emergency Response Contingency Plan on file	☐	☐	☐	☐	☐	☐	☐	☐	☐	☐	☐	☐	☐	☐
Sample records on file	☐	☐	☐	☐	☐	☐	☐	☐	☐	☐	☐	☐	☐	☐
Discrepancy reports prepared and filed	☐	☐	☐	☐	☐	☐	☐	☐	☐	☐	☐	☐	☐	☐
Incident reports for spills on file	☐	☐	☐	☐	☐	☐	☐	☐	☐	☐	☐	☐	☐	☐

Comments:

_____

_____

Figure 4-1. Fort McClellan IHF Inspection Checklist (Sheet 2 of 3)

Fort McClellan

IHF Inspection Checklist (Continued)

Corrective Action:

Mon:	Item: _____ Date: _____		Action Taken: _____ Signature: _____	
Tue:	Item: _____ Date: _____		Action Taken: _____ Signature: _____	
Wed:	Item: _____ Date: _____		Action Taken: _____ Signature: _____	
Thur:	Item: _____ Date: _____		Action Taken: _____ Signature: _____	
Fri:	Item: _____ Date: _____		Action Taken: _____ Signature: _____	
Sat:	Item: _____ Date: _____		Action Taken: _____ Signature: _____	
Sun:	Item: _____ Date: _____		Action Taken: _____ Signature: _____	

Figure 4-1. Fort McClellan IHF Inspection Checklist (Sheet 3 of 3)

c. Inspect supply of absorbent material available for spill cleanup. Spill kit and other emergency items, including decontamination supplies, will be clearly visible and accessible.

d. Check lights for serviceability.

e. Check that safety equipment, eye protection, gloves, personal protective gear, and respirators will be available.

f. Inspect fire extinguishers. Fire extinguisher inspection tag will be up-to-date.

g. Confirm that adequate tools are available (hammer, variety of screwdrivers, pliers, duct tape, and other miscellaneous items).

4.2.3 Inspect Records/Reports Procedures. The following recordkeeping items will be reviewed. If there are any discrepancies, action must be taken to correct problems cited.

a. Review last inspection report.

b. Inspect any outstanding deficiencies from last report.

c. Ensure that all data in waste logs are complete and up-to-date.

d. Ensure that a completed copy of the hazardous waste manifest, if needed, has been returned to generator (FTMC).

The results of the inspection will be reviewed with the TEU, PMNSCM, and the CESAM Site Safety Coordinator.

4.2.4 Transportation Route. A specific transportation route from each investigation site must be verified before this IHF Plan is implemented. Figure 1-2 shows suggested routes, which will be as direct as possible.

4.3 Predeparture Activities

Before recovered CWM is taken from an investigation site, the TEU will notify FTMC, CESAM, and TEU personnel at the IHF of the pending transport. IHF personnel will prepare for receipt of the material and CESAM will notify emergency response personnel.

4.3.1 Cargo Configuration and Order of Movement. The TEU will determine cargo configuration based on the number of containers to be moved and the design of the cargo vehicle. Two escort vehicles may be used, one ahead of and one behind the cargo vehicle.

4.3.2 Safety Briefing and Route Plan. All personnel participating in the transportation operation will receive a safety briefing by the TEU. Vehicle operators and assistant operators will have clear instructions and maps identifying the route they will follow.

4.3.3 Verify Contingency Personnel and Systems in Place. The TEU will verify that emergency response personnel are available and that spill response kits and monitoring equipment are operational before execution of loading procedures.

4.3.4 Execute Loading Procedures. Preapproved procedures will be executed to load the overpack(s) onto the cargo vehicle at the investigation site.

4.3.5 Inspect and Monitor Containers. Each overpack will be inspected and monitored to verify its integrity. Tie-downs and bracing will be inspected to ensure containers are adequately secured.

4.3.6 Initiate Chain of Custody. Because all transportation is onsite, a Resource Conservation and Recovery Act (RCRA) manifest is not required. However, chain-of-custody will be initiated by completing a DD Form 1911, Materiel Courier Receipt. A DD Form 836, Shipping Paper and Emergency Response Information for Hazardous Materials Transported by Government Vehicles, will also be required. A hazardous waste manifest will be required, in accordance with 40 CFR 262, before the CWM can be transported offsite.

4.3.7 Perform Communications Check. A communications check will be made with each piece of communications equipment on each vehicle before departure in accordance with the TEU operations plan.

4.3.8 Give Notification of Departure. Upon departure of the transport vehicle, notification will be made to CESAM, PMNSCM, and FTMC.

4.4 En Route Activities

En route activities from an investigation site to the IHF will be performed by the TEU. TEU personnel in the transport vehicle will be in contact with IHF personnel. Halting procedures will be established and used when the transport vehicle is required to stop for the following circumstances.

4.4.1 Mechanical Problems. Procedures will be in place to stop the vehicle as safely and as quickly as possible. Escort personnel will attempt to move the disabled vehicle so as not to impede other traffic. PMNSCM and CESAM will be notified of the situation. The cargo will be secured until the vehicle can be repaired or a replacement vehicle has been provided. Before restarting transportation, the TEU will account for all personnel and cargo.

4.4.2 Accident without Damage to Cargo. Procedures will be in place for the transport vehicle to stop as safely and quickly as possible and for TEU personnel to

inspect the cargo for leaks, secure loose cargo, and administer first aid. PMNSCM, FTMC, and CESAM will be notified of the situation.

4.4.3 Accident with Damage to Cargo. Emergency response procedures or leaking CWM are addressed in section 6.

4.4.4 Public Disturbance or Traffic Obstruction. Procedures will be developed to allow the transportation team to respond to an unexpected blockage of the transportation route. If necessary, the transport vehicle and escorts will stop, the TEU will communicate their status to CESAM and PMNSCM, choose an alternate route, and react according to the situation.

4.5 Prearrival Activities

Prearrival activities will occur at the IHF before the CWM is delivered. To prepare for arrival of the CWM, the following tasks must be completed.

4.5.1 IHF Inspection. The TEU will perform a daily internal inspection of the IHF whenever new material enters the IHF or when material is removed from the IHF for transport or destruction. The IHF inspection will be conducted to ensure that the storage operations are conducted in accordance with CERCLA requirements and this IHF plan.

All equipment used to unload the CWM and transfer it to the storage facility will be inspected to ensure that the needed equipment is on hand and operable. Safety and contingency response equipment will be checked to ensure it is available and operational.

4.5.2 IHF Open and Close Procedures. TEU personnel will be responsible for opening the IHF and performing IHF operations. Likewise, when the operations are finished for the day, TEU personnel will close and secure the facility. Coordination with

TEU will be maintained to ensure that the facility is open and ready to receive CWM. The IHF open/close procedures are as follows.

4.5.2.1 Open the IHF. TEU will open the IHF to receive CWM and to prepare and stage CWM for offsite transportation. The procedures to open the IHF are described below.

a. Notify CESAM Site Coordinator and security of pending opening.

b. Establish site access controls at IHF.

c. Notify and position emergency response personnel for the pending arrival of the CWM as required by the contingency plans.

d. Open IHF gate.

e. Inspect IHF.

f. Perform first entry monitoring. Follow instructions for air monitoring procedures (section 5).

g. If monitoring indicates agent is not present above 1.0 TWA, begin IHF operations.

h. If monitoring indicates agent contamination, begin contingency response as required by the contingency plan (section 6).

4.5.2.2 Close the IHF. Close procedures will be observed following acceptance of the CWM items at the IHF and transfer of the items into storage at the IHF (paragraph 4.6.2), or following removal of items from the IHF for onsite disposal or offsite shipment. TEU will perform the following procedures to close the IHF.

a. Confirm that CWM is stored in designated areas, is labeled, and that labels are filled out completely and are easily visible.

b. Observe containers for signs of agent leakage. If agent leakage is suspected, all operators will exit the IHF. In case of an emergency, TEU will follow emergency response contingency plan procedures or appropriate SOP.

c. Turn off interior lights.

d. Secure IHF doors and locks.

e. Notify CESAM Site Coordinator and security of IHF closure.

f. Secure and lock IHF gate.

g. Upon closing the IHF for the last time on any given day, notify and inform the CESAM Site Coordinator and security that the IHF is being secured for the day.

4.6 Arrival Activities

4.6.1 Pretransfer Activities. When the CWM arrives at the IHF from the investigation site, an inspection and inventory of the CWM items will be performed as described below.

a. *Inspect Containers.* TEU will inspect the containers for damage during transit.

b. *Unload CWM from Vehicle.* The CWM will be placed at the entrance of the IHF.

c. *Conduct Inventory.* The TEU will conduct a joint inventory with the FTMC representative using the DD Form 1911 Materiel Courier Receipt (figure 4-2) and the Container Information Form (figure 4-3). The TEU will initial and date the receipt of CWM on the shipping form. These forms and the IHF Inventory Log (figure 4-4) will serve as a chain-of-custody inventory and will ensure that CWM has been accounted for as required. In addition, the TEU will inventory the CWM at the completion of each CWM transfer.

4.6.2 CWM Transfer Activities. The procedures for transferring the CWM into the IHF are as follows:

a. Open the IHF in accordance with paragraph 4.5.2.

b. Move containers into IHF by hand or use handcart for heavy containers.

c. Place containers so that labels are clearly visible.

d. Do not stack MRCs.

e. Leave sufficient aisle space so that emergency access to any of the containers in the IHF is possible.

f. Perform physical inventory of CWM containers received. Perform physical inventory of all CWM containers in the IHF. Compare total quantity in stock with shipping forms on file.

g. File shipping form with others previously received.

h. Close and exit the IHF in accordance with paragraph 4.5.2.

MATERIEL COURIER RECEIPT	SHIPPER'S CONTROL/DOCUMENT NO.
SHIPPER	SUPPLY ACCOUNT NUMBER
DESTINATION	SUPPLY ACCOUNT NUMBER

PRIVACY ACT STATEMENT

AUTHORITY 5 U.S.C., Sec 552a (PL 93 579)

PRINCIPLE PURPOSES: To provide a receipt for transfer of controlled materiel. The use of the SSAN is required and is necessary to provide positive identification of the individuals receipting for the materiel.

ROUTINE USES: To document transfer of materiel from a shipper to a courier, courier to courier and/or receiver.

DISCLOSURE IS VOLUNTARY: Since the SSAN must be used, refusal to provide SSAN may be grounds for action to

I certify by my signature that I have received the materiel listed on this form and am aware of the applicable safety and security requirements.

SHIPMENT TRANSFERS

FIRST	LOCATION OF TRANSFER	DATE(YR/MO/DAY)
RECIPIENT'S PRINTED NAME (LAST, FIRST, M.I.)	ORGAN. OR ACCOUNT NO.	
SIGNATURE	SOCIAL SECURITY NUMBER	
SECOND	LOCATION OF TRANSFER	DATE (YR/MO/DAY)
RECIPIENT'S PRINTED NAME (LAST, FIRST, M.I.)	ORGAN. OR ACCOUNT NO.	
SIGNATURE	SOCIAL SECURITY NUMBER	
THIRD	LOCATION OF TRANSFER	DATE (YR/MO/DAY)
RECIPIENT'S PRINTED NAME (LAST, FIRST, M.I.)	ORGAN. OR ACCOUNT NO.	
SIGNATURE	SOCIAL SECURITY NUMBER	
FOURTH	LOCATION OF TRANSFER	DATE (YR/MO/DAY)
RECIPIENT'S PRINTED NAME (LAST, FIRST, M.I.)	ORGAN. OR ACCOUNT NO.	
SIGNATURE	SOCIAL SECURITY NUMBER	
FIFTH	LOCATION OF TRANSFER	DATE (YR/MO/DAY)
RECIPIENT'S PRINTED NAME (LAST, FIRST, M.I.)	ORGAN. OR ACCOUNT NO.	
SIGNATURE	SOCIAL SECURITY NUMBER	

SHIPMENT DESCRIPTION

LINE NUMBER	QUANTITY	SERIAL NUMBERS	REMARKS

DD FORM 1911 83 MAY

PREVIOUS EDITION MAY BE USED UNTIL 31 DEC 82

Figure 4-2. DD Form 1911 (Materiel Courier Receipt)

CONTAINER INFORMATION

Generator Information:

Container #_____

Contents: 1)_____

2)_____

3)_____

4)_____

5)_____

Date: _____ Certified: _____
signature

CONTAINER INFORMATION

Generator Information:

Container #_____

Contents: 1)_____

2)_____

3)_____

4)_____

5)_____

Date: _____ Certified: _____
signature

Figure 4-3. Container Information Form

Interim Holding Facility Inventory Log

Date Rec'd	Rec'd By	Container Number	Date Shipped	Shipped By

Figure 4-4. Interim Holding Facility Inventory Log

4.6.3 Post-Transfer Activities. Following the successful transfer of CWM from the transportation vehicle to the IHF, the TEU will verify that the transport vehicle and handling equipment are not contaminated before they are released from the IHF site. This can be accomplished by physically checking the vehicle or piece of equipment, by collecting vapor samples, and by using low-level monitors and detectors listed in the monitoring procedures (section 5). If contamination is found, the truck or piece of equipment will be decontaminated and confirmed uncontaminated before it leaves the IHF site.

4.7 Support Activities

At the conclusion of the remedial investigation, storage options for CWM in the IHF will be evaluated to determine how long the items will remain at FTMC. The following activities will be performed as long as CWM is stored in the IHF at FTMC.

4.7.1 IHF Surveillance, Maintenance, and Repair. When TEU is not onsite, CESAM will ensure that monthly external inspections of the IHF and surveillance monitoring using the Depot Area Air Monitoring System (DAAMS), as described in section 5, are conducted. Maintenance and repair of the IHF structure or equipment is the responsibility of CESAM and will be performed in a timely manner. If the structure or equipment cannot be repaired, a replacement will be provided by PMCD.

4.7.2 Security. The IHF must be secure at all times. The gate to the IHF storage area and IHF doors must be secured when the facility area is unoccupied.

4.7.2.1 Security Patrol. The security patrol (provided by CESAM) will monitor security of the IHF. If no CWM is in storage, the security patrol will periodically check the building as they would any other building. When recovered CWM is stored in the IHF and if an intrusion detection system (IDS) is installed, the security patrol will visit the facility once every 24 hours to observe conditions. The patrol will check the integrity of the fence, including the gate and lock, and observe the condition of the IHF and surrounding area. If there are signs of unauthorized activity or if any out-of-the-ordinary

circumstances are noticed, FTMC, CESAM, and TEU will be notified. The security guard will not enter the IHF under any circumstances. If there is reason to suspect that the integrity of the IHF has been compromised, the TEU will conduct first entry monitoring and an inventory and inspection of stored items.

If CWM is stored in the IHF and there is no IDS, or the IDS system is not working, then there will be a 24-hour armed guard posted at a location where access to the IHF can be monitored until the IDS is operational.

4.7.2.2 Control of Site Access. Access to the storage site must be controlled to ensure that no personnel, beyond the minimum necessary, are exposed to hazards from CWM transfer and storage operations. Prior to arrival of the CWM, the IHF area will be checked to ensure that no unauthorized persons are onsite. The area will be controlled to prevent access by unauthorized or unnecessary personnel. Only authorized personnel (known or approved by the TEU supervisor) will be given access to the facility.

SECTION 5
MONITORING

The possible chemical agents and industrial chemicals of concern that may be recovered during excavation activities include HD, VX, GB, CG, and BZ. Monitoring will be performed using the sampling devices at the concentration levels specified in this plan. The frequency and location of the sampling described by this IHF Plan are based on the type of monitoring required by DA Pam 385-61.

5.1 Types of Monitoring

5.1.1 First Entry Monitoring. First entry monitoring will be conducted by the TEU prior to entering the IHF. The appropriate monitor(s) will be used for the chemical(s) of concern being stored in the IHF. First entry monitoring procedures will be based on AR 385-61, DA Pam 385-61, and AR 50-6. Before entry into the IHF, monitoring will be conducted remotely (see figure 5-1) using low-level, near real-time (NRT) air monitoring equipment (MINICAMS®) to ensure that interior airborne chemical agent concentrations are below the TWA levels.

5.1.2 Surveillance Monitoring. Surveillance monitoring of the IHF containing recovered CWM will be conducted to check the integrity of the overpack containers and to identify any chemical leakage. Surveillance monitoring will be conducted during any thirty-day period when there is CWM in storage unless first entry monitoring has been conducted. The appropriate monitor(s) will be used for the specific chemical or chemicals of concern stored in the IHF. Surveillance monitoring will not negate the requirements for first entry monitoring. CESAM will be responsible to ensure surveillance monitoring is performed.

CESAM, TEU, PMCD, and FTMC will be contacted immediately if a reading over the workplace exposure level is obtained from surveillance monitoring.

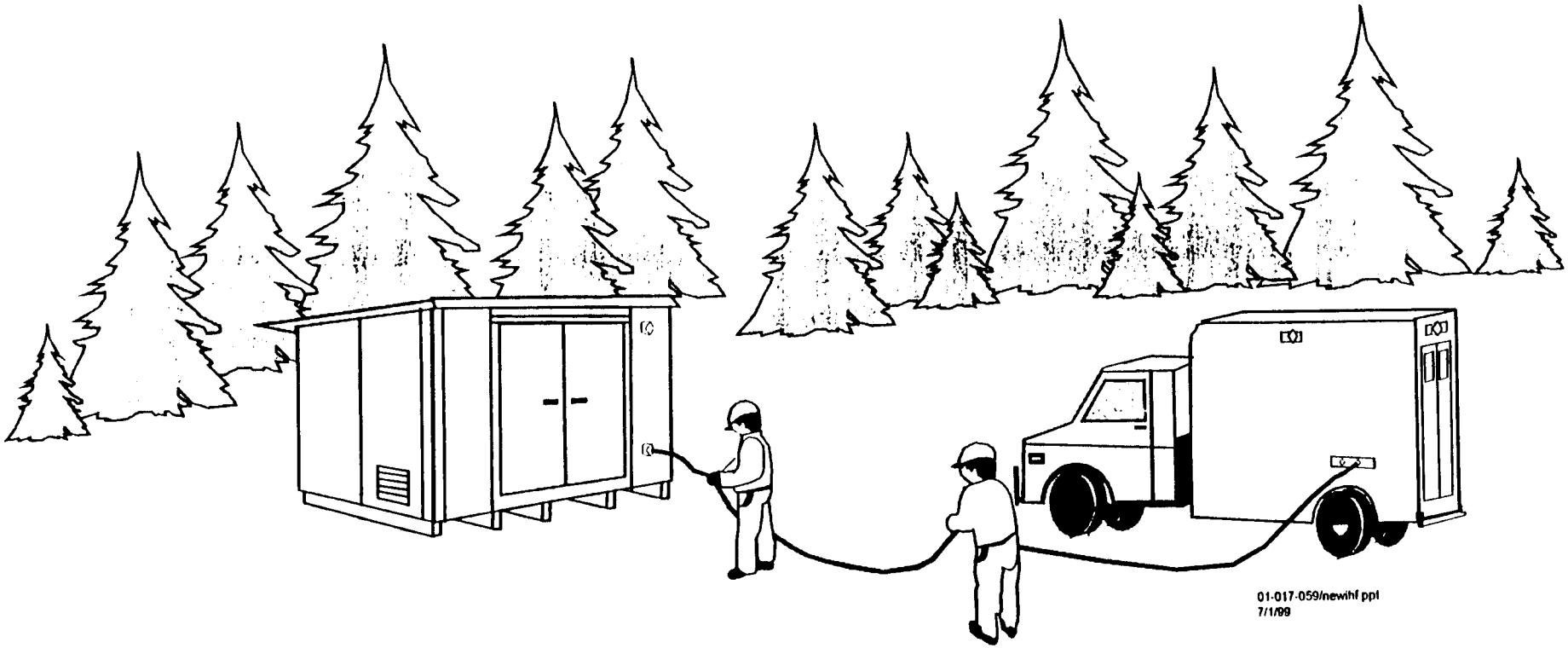

Figure 5-1. First Entry Monitoring

5.1.3 Contingency Monitoring. Contingency monitoring will be conducted during an emergency response contingency action (section 6). An emergency response will be initiated upon detection of a release in the IHF during first entry monitoring, during periodic surveillance monitoring, or as a result of a catastrophic event (damage to the IHF from external sources or an accident during onsite transportation) indicating a potential release.

5.1.3.1 Release During Storage. Upon detection of a release in the IHF by first entry or periodic surveillance monitoring, the TEU, dressed in OSHA Level B PPE, will conduct first entry monitoring using the appropriate monitoring instruments to confirm the release. The TEU will enter the IHF, identify the source of the release, and contain the leaking item in accordance with TEU operating procedures.

Once the leakage has been contained, the area will be decontaminated by the TEU according to DA Pam 50-6 or Army Technical Manual (TM) 60A-1-1-11, Explosive Ordnance Disposal Procedures, Chemical/Biological Agents and Related Materials; Characteristics, Leak Sealing, Disposal and Decontamination. Continuous monitoring will occur until readings fall below 1.0 TWA (table 5-1) for a minimum of three consecutive sampling periods.

5.1.3.2 Potential Release after Catastrophic Event. If a potential release is suspected in the general area of the IHF as the result of a catastrophic event (that is, integrity of IHF structure and/or contents is in question) or if a potential release is suspected at the scene of an accident during onsite transportation, downwind monitoring will be initiated.

An example array for monitoring at the IHF is shown in figure 5-2. Example arrays for situations involving transport of CWM are shown in figures 5-3 through 5-6. The appropriate monitors (table 5-1) will be used at each monitoring station in the monitoring array.

Table 5-1. Monitoring Equipment and Levels

Chemical of Concern	Type of Monitoring: Instrument	Workplace Exposure Level[a] TWA	Workplace Exposure Level[a] mg/m^3	Estimated Limit of Quantification[b] mg/m^3
Chemical Agent: Mustard (H, HD, HS)	First Entry: MINICAMS®	1.0	0.003	0.0006
	First Entry Confirmation: DAAMS	1.0	0.003	0.0006
	Surveillance: DAAMS	1.0	0.003	0.0006
	Contingency: MINICAMS®	1.0	0.003	0.0006
	Contingency Confirmation: DAAMS	1.0	0.003	0.0006
Lewisite (L)	First Entry: MINICAMS®	1.0	0.003	≤0.003
	First Entry Confirmation: DAAMS	1.0	0.003	0.0006
	Surveillance: DAAMS	1.0	0.003	0.0006
	Contingency: MINICAMS®	1.0	0.003	≤0.003
	Contingency Confirmation: DAAMS	1.0	0.003	0.0006
Sarin (GB)	First Entry: MINICAMS®	1.0	0.0001	0.00002
	First Entry Confirmation: DAAMS	1.0	0.0001	0.00002
	Surveillance: DAAMS	1.0	0.0001	0.00002
	Contingency: MINICAMS®	1.0	0.0001	0.00002
	Contingency Confirmation: DAAMS	1.0	0.0001	0.00002
HN-1	First Entry: MINICAMS®	1.0	0.003	0.0006
	First Entry Confirmation: DAAMS	1.0	0.003	0.0006
	Surveillance: DAAMS	1.0	0.003	0.0006
	Contingency: MINICAMS®	1.0	0.003	0.0006
	Contingency Confirmation: DAAMS	1.0	0.003	0.0006
Industrial Chemical: Phosgene (CG)	First Entry: MINICAMS®	1.0	0.4	≤0.4
	First Entry Confirmation: Colorimetric Tube	Gross Level		0.8
	Surveillance: Colorimetric Tube	Gross Level		0.8
	Contingency: MINICAMS®	1.0	0.4	≤0.4
	Contingency Confirmation: Colorimetric Tube	Gross Level		0.8

Chemical of Concern	Type of Monitoring: Instrument	Workplace Exposure Level[a]		Estimated Limit of Quantification[b]
		TWA	mg/m^3	mg/m^3
Chloroform ($CHCl_3$)	First Entry: MINICAMS®	1.0	9.7	≤9.7
	First Entry Confirmation: Colorimetric Tube	Gross Level		1.94
	Surveillance: Colorimetric Tube	Gross Level		1.94
	Contingency: MINICAMS®	1.0	9.7	≤9.7
	Contingency Confirmation: Colorimetric Tube	Gross Level		1.94

Notes:

[a] Workplace exposure level is an umbrella term encompassing all such levels, including the 8-hour time-weighted average, the permissible exposure limit (for industrial chemicals only), the threshold limit value (for industrial chemicals only), and other levels developed to protect the worker during normal operations. The term TWA is used in place of AEL because the concentration output of the MINICAMS® is expressed in TWA terms.

[b] The lowest level that can be reliably quantified based on sampling and analytical procedures and calibration of the monitor.

DAAMS = Depot Area Air Monitoring System
mg/m^3 = milligram per cubic meter
TWA = time-weighted average

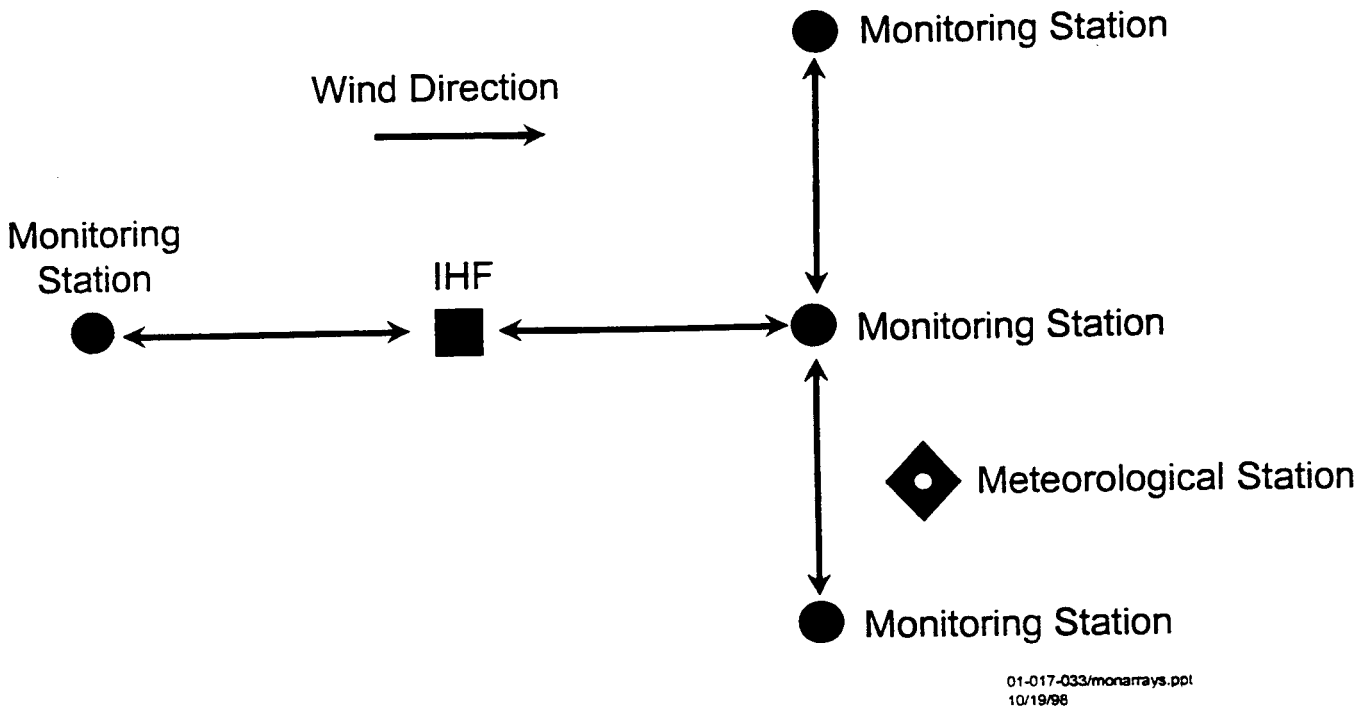

Figure 5-2. Example of a First Level Contingency Monitoring Array

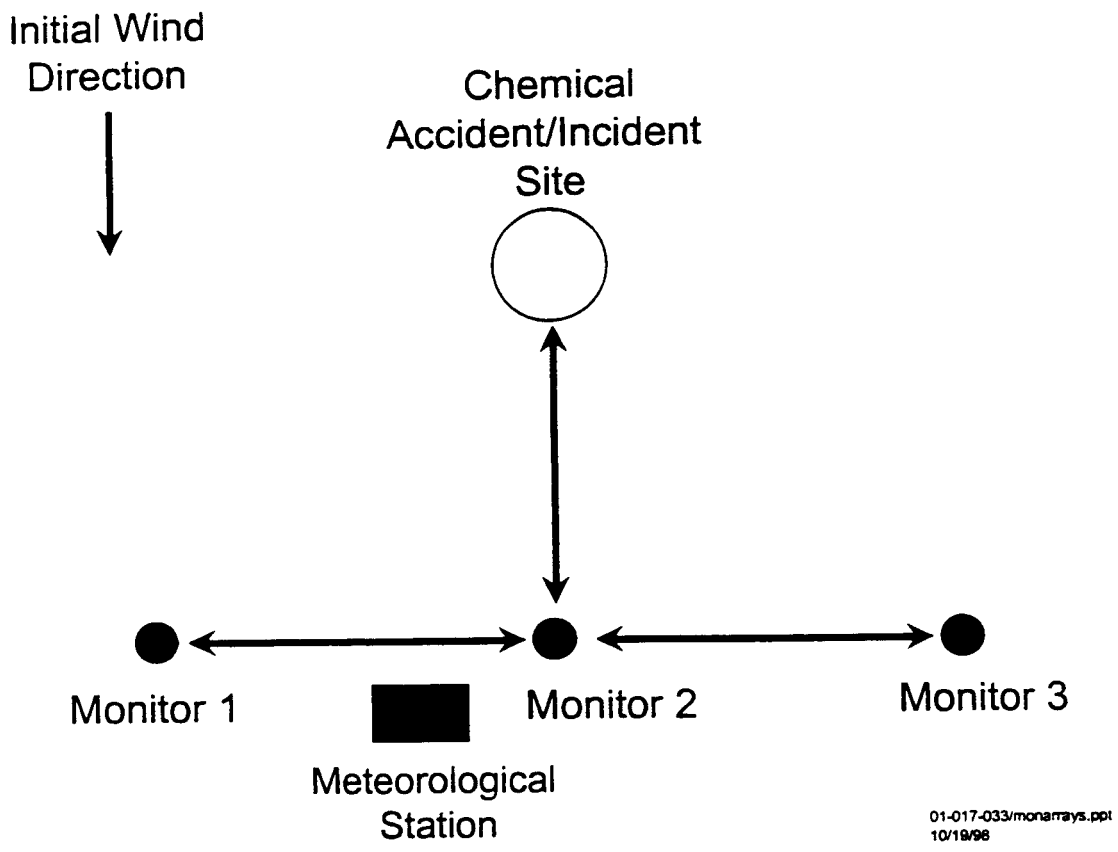

Figure 5-3. Initial Monitoring During Emergency Response

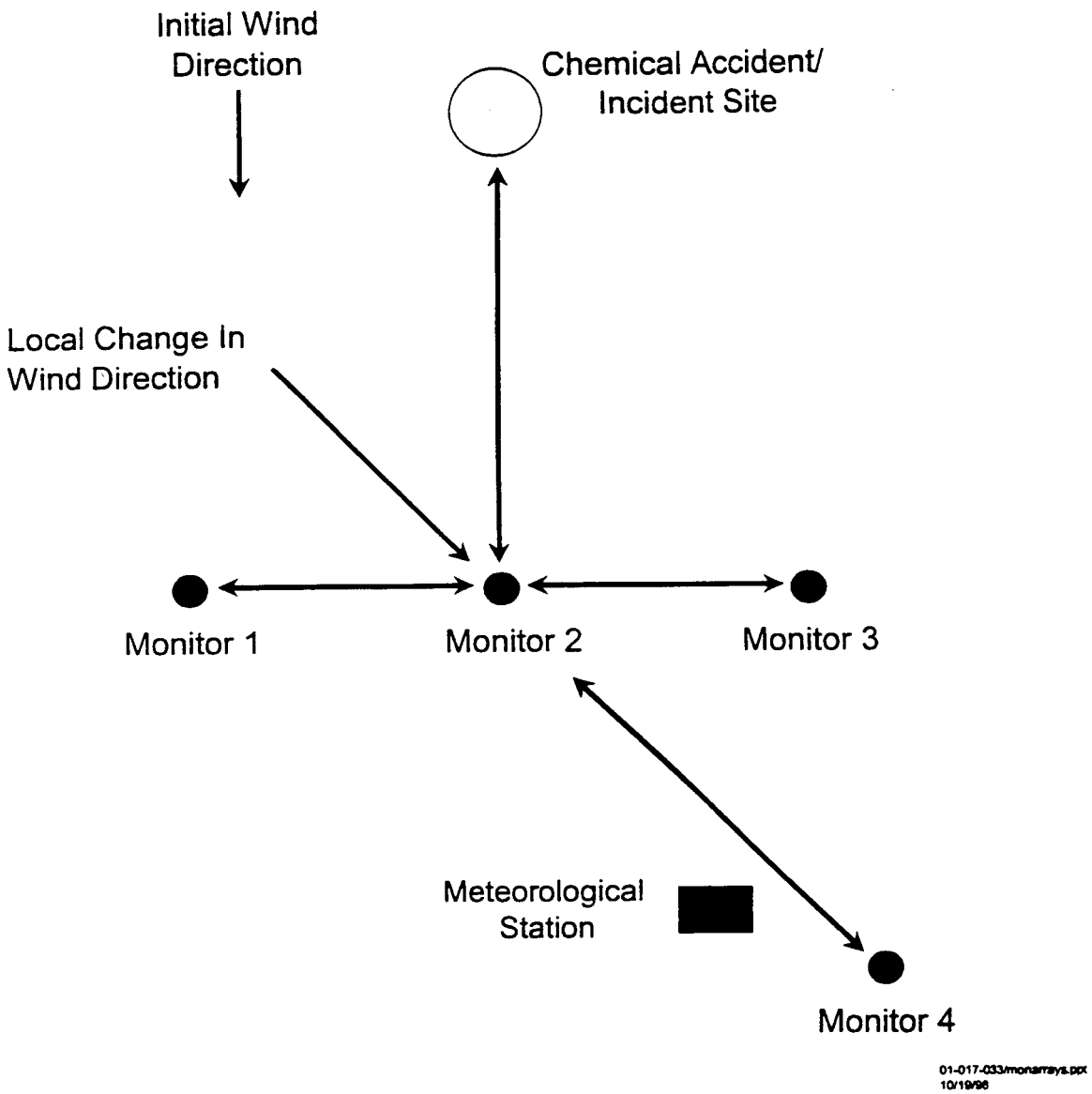

Figure 5-4. Second Array Monitoring During Emergency Response

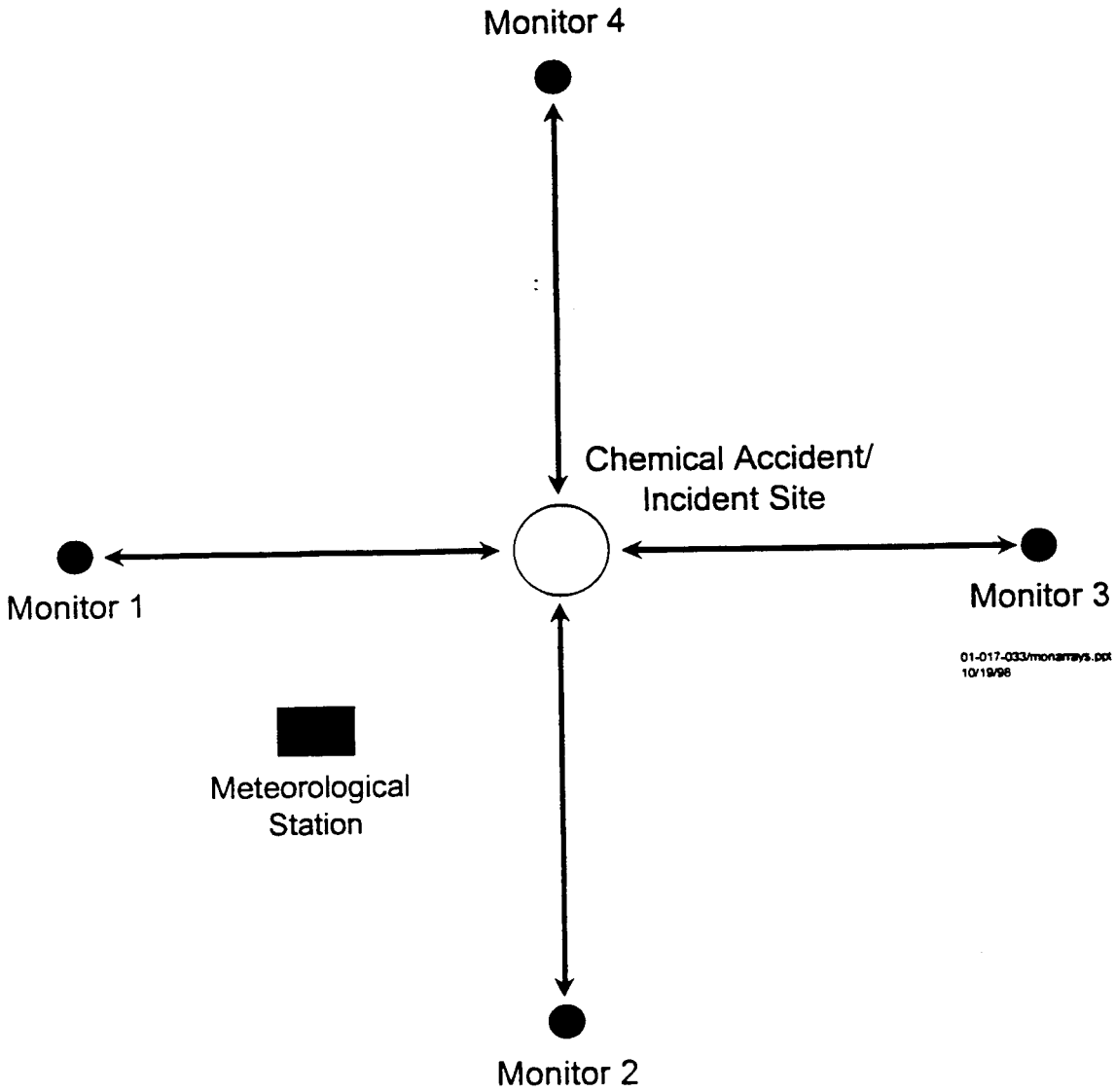

Figure 5-5. Emergency Response in No or Variable Wind Directions

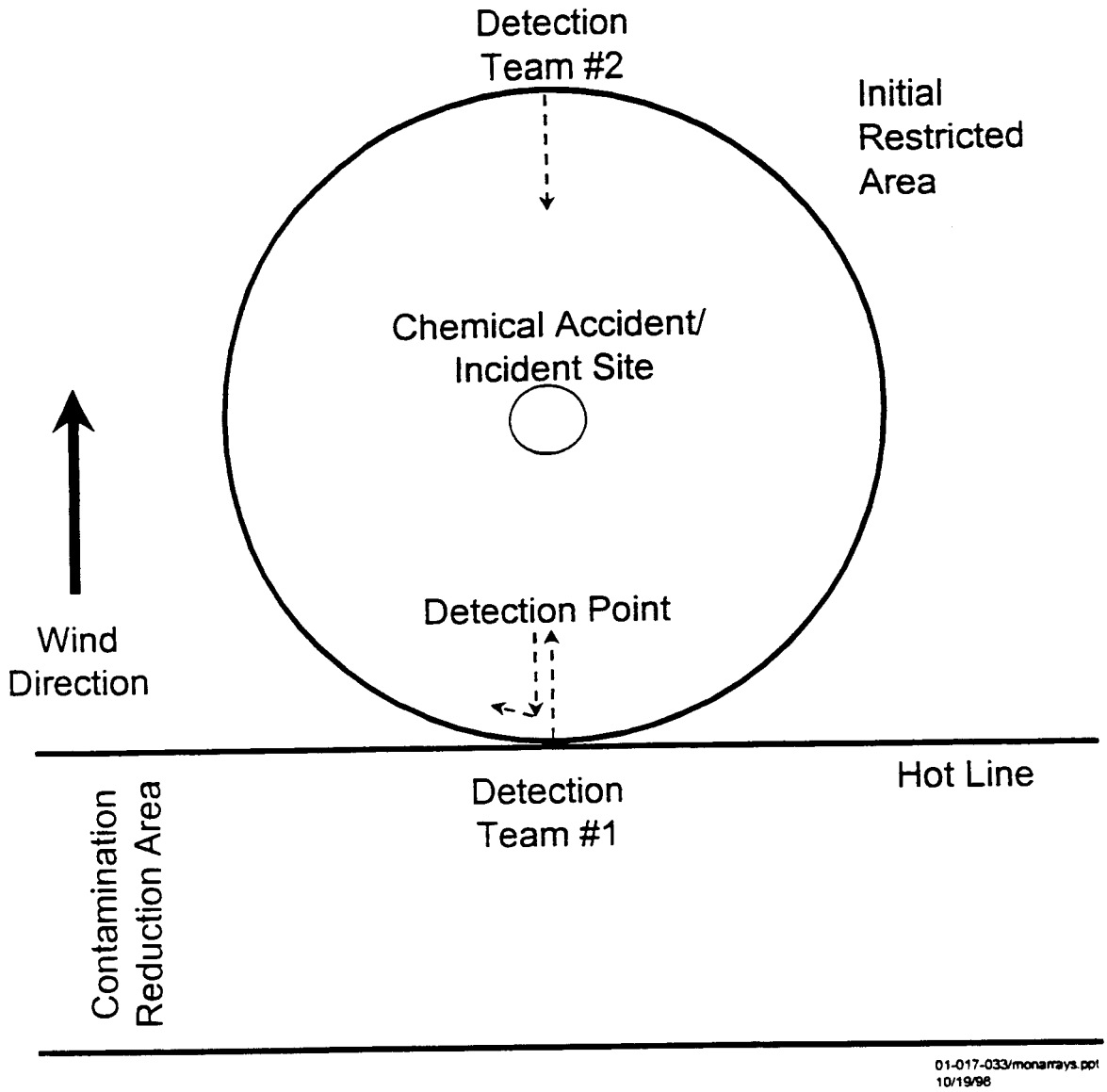

Figure 5-6. Surveillance Monitoring of the Restriction Area

5.1.4 Monitoring During Onsite Transportation. Onsite transportation consists of movements from the investigation site to the IHF. Once overpacked and inspected for onsite transportation, the item may be moved to the IHF. Monitoring of overpacks will not be required during onsite transportation unless an accident serious enough to damage the overpack occurs. Once the item has arrived at the IHF and has been unloaded, the overpacks will again be visually inspected. If the integrity of the overpacks does not appear to be sufficient, or if any evidence of leakage is observed, the item contained in the overpack will be repackaged by TEU (wearing appropriate PPE) and monitored with the appropriate equipment (table 5-1) to ensure the overpack is properly sealed.

5.2 Roles and Responsibilities

The TEU will provide qualified personnel to perform chemical agent monitoring at FTMC during recovery and onsite transportation operations. TEU will:

a. Provide and configure monitoring equipment such as the MINICAMS® and DAAMS to conduct monitoring operations for chemical agents

b. Obtain standards for CG, HD, VX, and GB

c. Obtain appropriate colorimetric tubes (Draeger 81-01521 for CG) for detection of industrial chemicals

d. Record calibration data, instrument parameters, and agent standards (when used) in instrument logbooks

e. Maintain daily printouts of calibration data and monitoring results, including hard copy MINICAMS® monitoring results.

Other TEU responsibilities associated with monitoring are to:

a. Perform D2PC[1] hazard prediction modeling prior to commencing daily operations and ensure that the daily downwind hazard distance does not exceed the distance calculated for the maximum credible event (MCE) discussed in annex A of this Plan

b. Provide the required personnel, equipment, and support vehicles to conduct the operation

c. Provide logistical support and resupply assets to sustain continuous operation throughout the duration of the project

d. Coordinate with CESAM and other onsite organizations to ensure that the monitoring plan is understood and that actions to be taken are known in the event agent is detected

e. Ensure MINICAMS® and DAAMS are tested and serviceable prior to commencing daily operations.

5.3 Monitoring Chemicals of Concern

5.3.1 Chemical Agents.

5.3.1.1 Mustard (HD). The TEU will use a MINICAMS® (see paragraph 5.4.1 for description) for first entry and contingency monitoring. The workplace exposure level for HD is 1.0 TWA [0.003 milligram per cubic meter (mg/m^3)]. DAAMS tubes (see paragraph 5.4.2) will be collected for surveillance monitoring and confirmation monitoring of a MINICAMS® alarm. The estimated limit of quantification for HD using MINICAMS® or DAAMS is 0.0006 mg/m^3.

---

1 D2PC is a U.S. Army-approved personal computer program for chemical hazard prediction.

5.3.1.2 Sarin (GB). GB will be monitored with the MINICAMS® (see paragraph 5.4.1) for first entry and contingency monitoring. The workplace exposure level is 1.0 TWA (0.0001 mg/m^3). DAAMS tubes will be collected for surveillance monitoring of GB and confirmation monitoring of a MINICAMS® alarm (see paragraph 5.4.2). The estimated limit of quantification for GB using DAAMS tubes or MINICAMS® is 0.00002 mg/m^3.

5.3.1.3 Lewisite. L will be monitored using a Lewisite MINICAMS® (see paragraph 5.4.1) for first entry and contingency monitoring. The MINICAMS® will be modified for the detection of L by adding a 1,2-ethanedithiol (EDT) derivative module on the intake end of the sample line and will be configured with a halogen selective detector (XSD). The workplace exposure level for L is 1.0 TWA (0.003 mg/m^3). DAAMS tubes will be collected for surveillance monitoring of L and confirmation monitoring of a MINICAMS® alarm. The estimated limit of quantification for L using DAAMS is 0.0006 mg/m^3 and less than or equal to 0.003 mg/m^3 for MINICAMS®.

5.3.1.4 Nitrogen Mustard (HN-1 and HN-3). Nitrogen mustard will be monitored as HN-3 using MINICAMS® for first entry and contingency monitoring. The workplace exposure level is 1.0 TWA (0.003 mg/m^3). DAAMS tubes will be collected for surveillance monitoring and confirmation monitoring of MINICAMS® alarms. The estimated limit of quantification using DAAMS or MINICAMS® is 0.0006 mg/m^3.

5.3.2 Industrial Chemicals.

5.3.2.1 Phosgene (CG). CG will be monitored using MINICAMS® (see paragraph 5.4.1) for first entry and contingency monitoring. The workplace exposure level is 0.4 mg/m^3. A Draeger colorimetric tube (81-01521) will be used for surveillance monitoring and confirmation of a MINICAMS® alarm. The estimated quantification limit for the Draeger tube is 0.8 mg/m^3.

5.3.2.2 Chloroform. Chloroform will be monitored using a MINICAMS® for first entry and contingency monitoring. The workplace exposure level for chloroform is 1.0 TWA

(9.7 mg/m^3). The MINICAMS® estimated limit of quantification is less than or equal to 9.7 mg/m^3. A Draeger colorimetric tube (67-28861) will be used for surveillance monitoring and confirmation of MINICAMS® alarm. The estimated limit of quantification for the Draeger tube is 1.94 mg/m^3.

5.4 Monitoring Devices

5.4.1 MINICAMS®. Air samples for first entry and contingency monitoring of HD, VX, CG, and GB will be collected and analyzed with MINICAMS®. The MINICAMS® is a low-level, NRT vapor monitor that has been designed to detect nerve and blister agents. The MINICAMS® uses a preconcentration sampler that passes air through a solid sorbent, such as a coarse mesh Tenax®, to collect the sample. The sample is collected at a known flow rate, over a timed sampling cycle, and the sample is desorbed and carried into a gas chromatograph (GC) temperature-programmed capillary column. The appropriate detector is configured for the chemical that is to be monitored.

5.4.2 Depot Area Air Monitoring System. The DAAMS is an air sampling and analysis method that provides surveillance sampling data by using sorbent tubes. The system consists of small, glass, sorbent-packed tubes, a vacuum pump, and flow control hardware. Sorbent tubes will be used for sampling all chemical agents. In the DAAMS method, air is drawn through a tube at a specified flow rate, and contaminant is collected by adsorption onto the tube sorbent packing. After sample collection, the sample is thermally desorbed from the tube into the carrier stream of a GC and subsequently detected using the appropriate detector.

5.4.3 Colorimetric Techniques. Colorimetric techniques are based on specific chemical reactions that lead to the formation of colored reaction products when agents are present above threshold concentrations. Colorimetric tubes, such as Draeger or Enmet tubes, are available for the detection of the industrial chemicals during surveillance monitoring and confirmation of a MINICAMS® alarm.

SECTION 6
EMERGENCY RESPONSE CONTINGENCY PLAN

6.1 Introduction

The Emergency Response Contingency Plan outlines those procedures to be taken in the unlikely event of an accident, emergency, or unintentional release of toxic chemical agent while CWM is being transported onsite and stored at the IHF. These procedures deal specifically with the CWM IHF; however, they rely heavily on those emergency response procedures already prepared by the Army. They include:

- Site Safety Submission
- TEU Regulation 50-1
- TM 60A-1-1-11
- DA Pamphlet 50-6.

In addition, emergency response will consider the Emergency Response Guidebook developed by the Research and Special Programs Identification of the DOT and DA Contingency Plans and Procedures, including Army Regulation 200-1, Environmental Protection and Enhancement, Chapter 8, Oil and Hazardous Substance Spill Contingency and Emergency Response.

6.2 Objective

The primary concerns of emergency response to a chemical accident will be to protect human health by controlling chemical agent release and protecting the environment. It is essential that personnel be prepared in the event of an emergency. All emergency response operations should be performed in the safest manner and in accordance with preapproved contingency plans. The three major types of emergencies that can be encountered are: (1) spills that may include exposure to chemical or hazardous materials, (2) incidents requiring medical help, or (3) fire.

This Emergency Response Contingency Plan complies with 29 CFR 1910.120 and addresses the following elements:

- Planning
- Emergency recognition
- Personnel, authority, and communications
- Emergency alerting, reporting, and evacuation routes
- PPE and emergency equipment
- Procedures for decontamination and medical treatment.

As recommended by the USEPA, this Emergency Response Contingency Plan also includes sections that address procedures to protect the local affected population in the event of an accident or emergency. They are:

- First responders involving the IHF (TEU only)
- First responders not involving the IHF
- First aid and medical information
- Air monitoring plan
- Spill control and countermeasures plan.

6.3 Notifications

FTMC has authority during storage of the CWM. In the event of a chemical accident/incident (CAI), TEU personnel will assume immediate control of the scene and take necessary steps to save lives and protect property. FTMC will notify local and regional authorities in accordance with this Emergency Response Contingency Plan. The TEU personnel will assume a technical advisor role and cooperate fully with local authorities (for example, advice on need for evacuation, size of hazard area, and need for PPE).

6.4 Interim Holding Facility

These procedures outline operational tasks to be performed prior to storing CWM and in the event of an accident or incident involving the overpacked CWM.

6.4.1 Contingency Planning. TEU personnel responsible for responding to emergency conditions will review the emergency procedures described in the Site Safety Submission and ensure that all necessary emergency equipment is ready for use. All personnel training will have been completed prior to operations. All personnel will be briefed on their roles in emergencies, such as firefighting, cleanup, or first aid.

Medical support will be required to respond to chemical accidents or incidents that may affect workers or the public during the transportation or interim storage of the recovered CWM. The procedures provided in this Plan and the Site Safety Submission will address situations that could occur during onsite transportation and storage of recovered CWM.

6.4.2 Personnel. IHF operations will be conducted by TEU and will be done in close coordination with PMCD. The TEU will respond in the event of a CAI during onsite transportation or during storage of CWM. The TEU personnel are trained and equipped for responding to CAIs that may occur. The TEU will have limited capabilities of implementing the same primary public safety measures as those performed by community officials in fixed-site emergency response programs. The TEU will have the proper tools to perform monitoring, first aid, decontamination, fire protection, and leak control.

a. *Training and Certification.* All personnel who participate in the emergency response to a chemical accident will be trained in emergency procedures, first aid, use of PPE, and cardiopulmonary resuscitation (CPR) and will have the basic knowledge of agent exposure symptoms. At a minimum, this will include 29 CFR 1910.120(e) training. All emergency response organizations will have their supervisor and team members familiarize

themselves with the Site Safety Submission, this IHF Plan, and the TEU operations procedures and SOPs applicable to CWM decontamination and spill cleanup.

b. *The TEU Coordination with Support Personnel.* The TEU will be able to coordinate responses with other participating key organizations and local emergency response personnel, who, in turn, will provide them with response management expertise in areas such as public alert, notification, traffic and access control, assistance to affected populations, and initial medical intervention and care.

6.4.3 Emergency Response Resources.

a. *Local.* The Site Safety Submission will be reviewed by the TEU prior to acceptance of CWM at the IHF. This plan specifies the onsite emergency coordinators, local emergency response agencies, and safety and environmental officials. These resources are available for use, if necessary, in the event of a chemical emergency. Transportation of CWM to the IHF will be performed using an escort vehicle followed by the CWM transportation vehicle. Additional vehicles include:

(1) *Medical Support Vehicle.* A vehicle will be available to transport injured personnel to the identified emergency medical facilities.

(2) *Fire Truck Vehicle.* A fire truck will be onsite during recovery and transport operations at the IHF.

Phone contacts for local response resources are presented in the Site Safety Submission. The Site Safety Submission should be referred to for specific instructions and protocol for contacting emergency response organizations.

b. *State-Level Emergency Response Resources.* State-level emergency response resources may be needed to provide secondary supporting activities. However, the necessity for this type of response is remote due to the absence of the public within the operations area.

6.5 Contingency Plans

The Site Safety Submission will be used as a source of reference for emergency planning and implementation.

An accident during CWM transfer into or out of an IHF is more likely than an accident during storage. While the CWM is stored in an IHF, it is unlikely that an emergency will occur; however, this section incorporates those procedures and notifications necessary to respond to the incident.

During storage, emergency response will be provided by TEU when notified by CESAM or FTMC. TEU has been given special training to address response procedures, decontamination methods, and spill cleanup. Highlights of those procedures are provided in the following paragraphs, which outline the personnel, equipment, and procedures to be taken in the event of an emergency.

6.5.1 Hazards Associated with Chemical Warfare Materiel. Handling CWM is addressed in the TEU Operations Plan. Key procedures used to handle this type of situation are discussed in the following paragraphs. They include:

- Isolation
- Notification
- First aid
- Characterization
- Cleanup/disposal.

a. *Isolation.* The following steps are to be taken to isolate the leaking container from the other stored items:

(1) Upon observing a spill or detecting a leak, the TEU will immediately don their masks, proceed to a safe distance upwind, direct other personnel away from the spill, and initiate emergency response actions as appropriate.

(2) Sources of ignition within 50 feet of the spill, including vehicles, will be removed immediately.

(3) Workers who may have been in contact with spilled materials will undergo decontamination.

(4) TEU will take action to identify the contamination and mitigate leaking CWM.

b. *Notification.* The following steps are to be taken to notify the appropriate authorities of an emergency situation:

(1) FTMC is responsible for the FTMC area where the CAI occurred. Persons witnessing or discovering a CAI will contact emergency responders by calling 911.

(2) As conditions dictate, FTMC may make offsite notifications following the Site Safety Submission.

c. *First Aid.* The following actions will be taken, as appropriate:

(1) If workers are unable to evacuate themselves, their rescue will be the responders' first priority after inspecting the scene and securing the CWM.

(2) Responders will wear OSHA Level B, or equivalent, PPE to conduct emergency response actions.

d. *Characterization.* The following characterization steps may be performed:

(1) TEU will investigate the accident site to determine the condition of the involved cargo and areas of possible contamination. Reentry to the area will be conducted in the appropriate level of PPE.

(2) The following three hazard categories will apply, unless evidence indicates otherwise: oxidizing, corrosive, and acutely toxic by skin contact or inhalation (materiel will be presumed to volatilize significantly unless proven otherwise).

(3) At the discretion of the TEU, samples will be collected for field or laboratory testing.

(4) The area of the spill will be determined and documented. The quantity will be estimated. The area will be marked with stakes and barrier tape.

(5) Perimeter air monitoring using DAAMS, both upwind and downwind of the spill, will be conducted by TEU or ECBC. Spill site monitoring will be conducted in accordance with table 5-1.

e. *Cleanup/Disposal.* Damaged containers will be placed in MRCs (or drums of compatible construction) containing suitable loose sorbents. Empty drums will be maintained near the IHF. Contaminated tools and equipment for decontamination or disposal will be collected. Disposal will depend on the identity of the spilled materiel. Unidentified overpacked materiel will be stored in a secondary containment area, pending identification.

6.5.2 Fire. In the unlikely event that a fire during CWM transport or storage occurs, procedures for responding to fire events are as follows:

a. *Isolation.* Upon detecting a fire, the TEU will determine whether the fire is small enough to extinguish with either a portable extinguisher or water that is immediately available. Non-essential personnel will be directed away. First responders will attempt to extinguish the fire provided that:

(1) They are able to approach the fire from the upwind side or opposite to the direction of the fire's progress.

(2) A fire extinguisher rated ABC is readily available.

(3) No known complicating factors are present, such as the likelihood of rapid spread, imminent risk of explosion, or gross contamination. Conditions and common sense may dictate changes in sequence of actions.

(4) Personnel leaving a fire area will account for all other employees in the area as soon as possible.

b. *Notification.* FTMC and CESAM will be notified as soon as possible of the location, size, and nature of the fire/explosion. As conditions dictate, TEU personnel will declare an emergency, initiate the remedial procedures, request assistance from the local fire department, and make necessary notifications as listed in the emergency response notification list. The Site Safety Submission will provide additional details of local notification requirements.

c. *Rescue.* Rescue of employees unable to evacuate themselves will be the first priority of responders.

d. *Firefighting Procedures.* The procedure to perform firefighting involves:

(1) Stopping the transporter (if during movement)
(2) Sounding the alarm
(3) Using the fire extinguisher
(4) Requesting assistance from the fire department.

The following are guidelines to be followed during a response to a fire:

- No attempt should be made to extinguish large fires. These should be handled by the fire department.

- If human life appears to be in danger or if the spread of fire appears to be rapidly progressing, personnel should be moved further upwind, away from the fire.

e. *Fire Extinguishing.* There are three possible classes of fire extinguisher:

(1) Class A (wood, cloth, paper, rubber, many plastics, and ordinary combustible materials). Examples are:

- Water
- Water with 1-percent aqueous film forming foam (AFFF)
- Water with 5-percent AFFF or fluoroprotein
- Foam
- ABC dry chemical
- Halon 1211.

(2) Class B (flammable liquids, gases, and greases). Examples are:

- ABC dry chemical
- Purple K

- Halon 1211
- Carbon dioxide
- Water with 6-percent AFFF.

(3) Class C (energized electrical equipment). Examples are:

- ABC dry chemical
- Halon 1211
- Carbon dioxide.

f. *Protective Clothing.* Based on the conditions, first responders, the TEU or CEHNC personnel, will determine appropriate distances and selection of PPE. Firefighting turn-out gear may be required.

g. *Decontamination.* At the conclusion of firefighting activities, TEU will determine, to the extent practicable, the nature of the contaminants encountered during the incident. The TEU will arrange for equipment to be processed through decontamination, and/or labeled and isolated for further action.

6.5.3 Medical Emergencies. Unless their lives are endangered, seriously injured, or ill, personnel should not be moved until an assessment has been made by a person trained in first aid and CPR. If a CAI injury or illness occurs, full decontamination will be completed and first aid administered before transportation.

First aid should be administered while awaiting an ambulance or paramedics. All injuries and illnesses must be reported to FTMC and to the agency or contractor that employs the injured person. Any person transporting an injured/exposed person to a clinic or hospital for treatment should take along directions to the hospital and information concerning the nature of the injury or illness. Coordination with medical facilities is described in the Site Safety Submission.

6.5.4 Local Hospitals. The following hospital will be contacted for emergency care.

Stringfellow Memorial Hospital
301 East 18th Street
Anniston, Alabama
256-235-8900

6.5.5 Hazardous Material Handling. The onsite emergency response will be performed by the TEU. When a leak or spill occurs, immediate containment and preventive measures must be taken. Procedures for material handling are specified in TEU SOPs. Response operations will be monitored continuously. Upon completion of cleanup efforts for the accident, responsible personnel should notify FTMC and CESAM, collapse the exclusion area, and give the order to resume the transportation or storage operation.

(This page intentionally left blank.)

SECTION 7
ROLES AND RESPONSIBILITIES

The primary participating organizations include PMCD, CESAM, SBCCOM/TEU, FTMC, and CEHNC. The organization is shown in figure 2-1.

The participating organizations involved with onsite transportation and storage of recovered CWM have both shared and individual roles and areas of responsibility. For example, the IHF is operated by TEU for FTMC in close coordination with PMCD and other responsible organizations. The TEU will provide the personnel and equipment to perform the detailed assessment/removal of CWM, package and move recovered CWM to the IHF, and operate the IHF on an interim basis. Close coordination between all organizations will be maintained.

Common responsibilities include:

a. Coordinating with other organizations

b. Performing duties in accordance with accepted health and safety procedures

c. Using established supply procedures and providing the supplies necessary to support their operations

d. Providing emergency response support

e. Developing training plans for use by emergency response teams.

Specific responsibilities for each key organization associated with IHF operations are presented in the following paragraphs.

7.1 U.S. Army Program Manager for Chemical Demilitarization

During IHF activities, PMCD will:

a. Retain program responsibility for ensuring that CWM handling, transportation, storage, and disposal are accomplished in accordance with federal and state safety and environmental regulations; coordinate activities with supporting agencies to transfer and store CWM from investigation sites to the IHF

b. In coordination with TEU, safely maintain, on an interim basis, suspect CWM recovered during site remediation in preparation for final disposition

c. Accomplish an HA to address the relative risk of CWM storage and onsite transportation. Information on health hazards associated with CWM is provided in annex C.

d. Develop and oversee CWM handling programs, such as monitoring (section 5), inspecting, storing, transferring from storage, and emergency response (section 6)

e. Ensure accountability through proper documentation at FTMC

f. Ensure safe, environmentally acceptable storage, transportation, and disposal of CWM in close coordination with associated responsible organizations.

7.2 U.S. Army Corps of Engineers, Mobile District

As the agency conducting the remedial investigation, CESAM will:

a. Exercise site control, per this Plan and the local workplan, during all phases of the remedial investigation operations

b. In close coordination with FTMC, PMCD, CEHNC, and TEU, select the IHF location and exercise control of CWM in the IHF when TEU is not onsite

c. Coordinate standby decontamination, medical support, and emergency response with FTMC, CEHNC, and TEU as needed during all phases of operation

d. Oversee site operations conducted by the remedial investigation contractor and TEU to safely manage recovered CWM awaiting final disposition

e. Support routine maintenance of the IHF

f. Inspect IHF operations to ensure compliance with the CERCLA and this Plan

g. Provide physical security support for IHF operations

h. Coordinate with federal, state, and local environmental agencies.

7.3 U.S. Army Soldier and Biological Chemical Command/Technical Escort Unit/Edgewood Chemical Biological Center

SBCCOM/TEU/ECBC will be responsible for the following activities:

a. Provide support to local and overseeing agencies

b. Perform recovery operations of suspect CWM at FTMC

c. Provide personnel to transport CWM onsite and operate the IHF. TEU personnel will be trained to provide emergency first aid until relieved by responding medical teams in accordance with preapproved contingency plans.

d. Escort CWM during onsite transportation and operate the IHF

e. Perform work site monitoring during recovery, assessment, and packaging, and first entry, surveillance, and contingency monitoring for IHF operations

f. Inspect the IHF periodically for signs of deterioration or other damage that could lead to release of chemical agent

g. Provide first response during emergency situations that occur during recovery, overpacking, transportation, and storage operations

h. Train personnel in IHF operations, including proper lifting techniques and hazard communication training for all chemicals used at the site

i. Provide sampling capability (monitoring equipment and personnel) at IHF for first entry monitoring

j. If necessary, train CESAM contractor personnel to conduct surveillance monitoring of the IHF

k. Provide other direct support during storage of CWM.

7.4 U.S. Army Engineering and Support Center, Huntsville

a. Conduct intrusive investigations of the suspected CWM sites
b. Provide backup support to the TEU during recovery operations
c. Provide public affairs support to FTMC.

7.5 Fort McClellan

In its role as the supported organization, FTMC will:

a. Make an appropriate site available for location of the IHF

b. Coordinate with local agencies for emergency response and medical support

c. Conduct public affairs in coordination with PMCD Public Outreach and Information Office (POIO) and CEHNC Public Affairs Office (PAO)

d. Coordinate with state and local regulatory agencies.

(This page intentionally left blank.)

SECTION 8
PUBLIC OUTREACH

PMCD and PMNSCM are committed to two-way communications with stakeholders interested in the activities described in this IHF Plan. Coordination between FTMC PAO, CEHNC PAO, and PMCD POIO is critical to establishing and maintaining a timely, effective, and accurate information exchange among all interested parties and affected agencies. PMCD POIO should be consulted prior to all public outreach initiatives (that is, public meetings, official meetings, press releases, etc.) so public perception analyses and proactive strategies (position papers, Q&As, etc.) can be developed. All information about the IHF Plan will be distributed through PMCD.

FTMC has overall responsibility for public outreach involving this project and will be the focal point for public inquiries. FTMC will coordinate with all participating agencies to obtain information for public release and to ensure all agencies are aware of the public's concerns. Outreach efforts containing information about the storage of recovered CWM will be coordinated with PMCD POIO before implementation. Likewise, any public concerns relating to the storage of recovered CWM will be shared with PMCD POIO. PMCD/PMNSCM will support FTMC by preparing fact sheets, arranging for experts to answer questions, and integrating site-specific outreach activities into national and regional programs.

Public outreach activities will be planned to accommodate the degree of public interest and to address the specific concerns that are voiced. Specific outreach activities will include:

a. Making information available at a public repository

b. Conducting public availability sessions

c. Issuing press releases or notices prior to key events (such as to advertise an availability session, or announce the conclusion of operations)

d. Interacting with interested individuals, elected officials, and special interest groups.

e. Maintaining a list of interested parties and ensuring that these parties receive information that addresses their concerns

f. Maintaining an outreach presence at the work site or other designated location as warranted.

Annex H contains answers to questions that might be asked about this plan. Further questions should be directed to the individuals listed below. All information about this IHF Plan will be distributed through PMCD. Telephone numbers and points of contact include:

Mr. Hershel Chapman
FTMC PAO
Building 51
Buchner Circle
Ft. McClellan, AL 36205
256-848-5574
chapmanh@mcclellan-emh2.army.mil

Mr. Bob DiMichele
CEHNC PAO
P.O. Box 1600
Huntsville, AL 35807
256-895-1691.

For additional information or comments, contact:

Mr. Bob Jones
Project Manager for Non-Stockpile Chemical Materiel
Attn: SFAE-CD-P
Aberdeen Proving Ground, Maryland 21010-5401
800-488-0648 or 410-436-7439
rjones@c-pmcd.apgea.army.mil
Fax: 410-436-8738.

(This page intentionally left blank.)

SECTION 9
CONCLUSIONS

This FTMC IHF Plan provides a scope of effort that is intended to support the remedial investigation of suspected CWM sites at FTMC. In the event that CWM is recovered, this Plan describes procedures and resources to safely handle, transport, and store the recovered CWM. The CWM will be managed, packaged, and stored as a hazardous waste.

No MCE was identified for the storage, handling, and onsite transportation of recovered CWM sealed in MRCs. None of the accident scenarios identified as leading to release of CWM met the definition of a credible event contained in DA Pam 385-61.

As part of the effort to determine if the proposed IHF operation can be performed in a safe manner, an HA was conducted to identify and evaluate the hazards associated with the proposed activities. The assessment (annex A) developed a comprehensive list of hazards associated with IHF operations. Seventeen hazards were identified from the concept of operations and from historical information. Risk assessment codes (RACs) were assigned to each hazard based on severity of consequence and frequency of occurrence. The HA concluded that onsite transportation and storage of the recovered CWM at FTMC can be performed safely, provided procedures described for the safe handling, movement, and storage of CWM are followed.

The HA calculated a total carrier accident probability for onsite transportation of 1.67×10^{-7}.

(This page intentionally left blank.)

ANNEX A

INTERIM HOLDING FACILITY HAZARD ANALYSIS

ANNEX A

INTERIM HOLDING FACILITY HAZARD ANALYSIS

1. INTRODUCTION

This hazard analysis (HA) was developed to support the Interim Holding Facility (IHF) Plan for Fort McClellan (FTMC), Alabama. It is the product of an analysis of hazards associated with handling, storage, and onsite transportation at FTMC and is performed in accordance with the Non-Stockpile Chemical Materiel Program (NSCMP) System Safety Management Plan (SSMP) [U.S. Army Chemical Materiel Destruction Agency (USACMDA), 1994]. Hazards of the recovery operation, including overpacking recovered items, are discussed in the Site Safety Submission hazard analysis. In the HA, potential incidents that could occur during handling, storage, and onsite transportation are discussed qualitatively. To assign relative values to potential risk, a risk assessment code (RAC) is identified for each hazard or hazardous condition. Recommended controls for reducing either the probability that a hazard will result in an accident or reducing the severity of the consequences of such an accident are included in the discussion of each hazard and summarized in paragraph 5 of this annex and in attachment A-1.

2. CONCEPT OF OPERATIONS

This section provides an overview of the activities performed for chemical warfare materiel (CWM) handling, onsite transportation, and storage. It also describes the IHF facility and the weather and geographic surroundings.

2.1 Interim Holding Facility Activities

IHF operations involve handling, storage, and onsite transportation activities for recovered CWM after the CWM has been sealed inside an overpack container.

Handling includes lifting and placing of CWM into transport vehicles or into the IHF. For purposes of this HA, handling begins once the recovered CWM has been assessed and placed inside of a Department of Transportation (DOT)-approved multiple round container (MRC). Handling generally involves use of mechanical handling equipment such as a forklift or a dolly jack. Onsite transportation is the movement of CWM (inside an MRC) from the recovery site to the IHF for temporary storage. Onsite transportation will be performed with a suitable truck such as a half-ton pickup truck or larger vehicle. Storage will be conducted in an IHF described in paragraph 2.2. Throughout handling, onsite transport, and storage, monitoring will be conducted in accordance with the IHF plan and will include use of near real-time (NRT) monitors, Depot Area Air Monitoring System (DAAMS), and visual inspection of the MRC. Figure A-1 shows the location of the IHF and the proposed transportation routes from the four investigation sites discussed in the IHF Plan.

Personal protective equipment (PPE) and other safety equipment will be readily available while operations are being conducted within the IHF, but this equipment will not be stored at or within the IHF. For specific information on operations and transport routes, refer to section 4 of the IHF Plan.

2.2 Facility Description

The IHF is a portable storage building designed to store hazardous waste, and specifically, recovered CWM. The building is 8 feet wide by 16 feet long by 8 feet high and is capable of being transported on a flatbed truck without special Department of Transportation (DOT) permits.

The interior of the IHF is approximately 100 square feet of clear space for storage and a walkway. A sump equipped with an accessible exterior drain is located below the floor. The IHF has interior and exterior lights. The door is located in the center of the long side of the building and is equipped with two high security hooded locking hasps to accommodate padlocks.

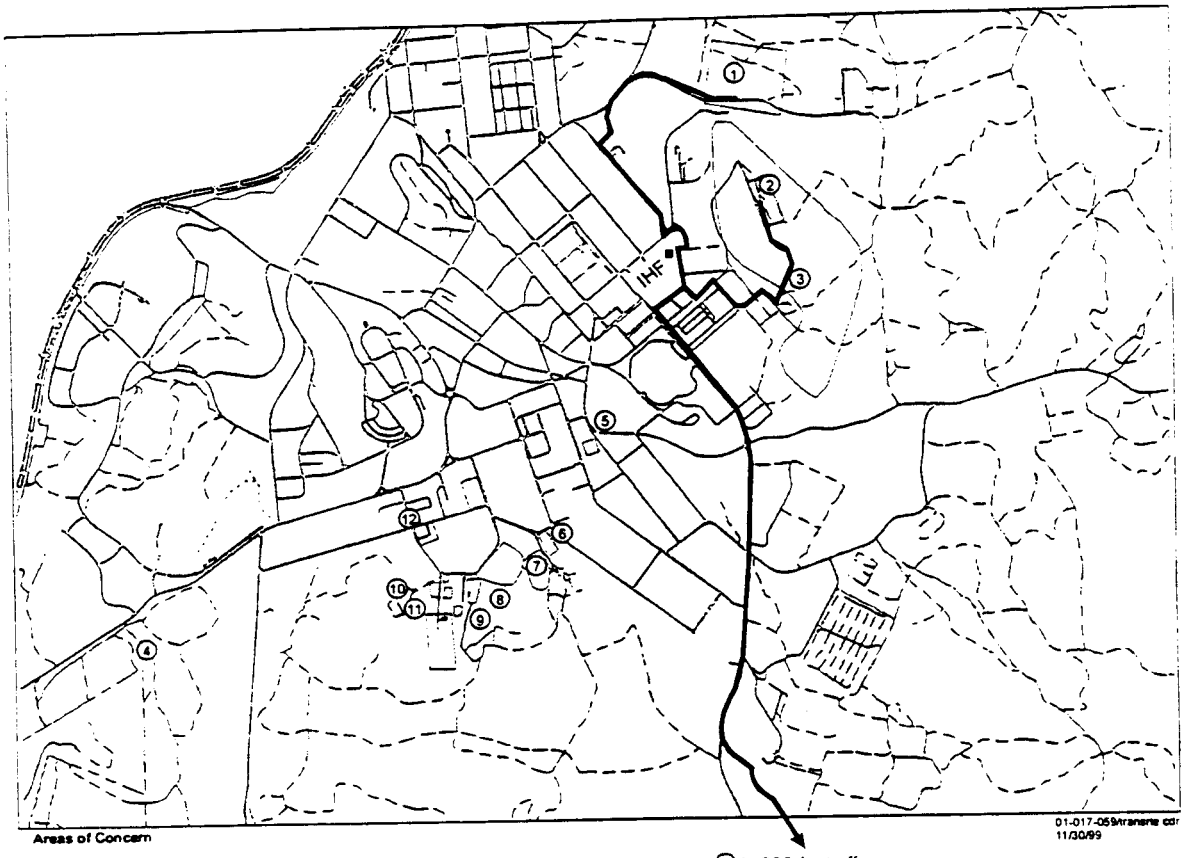

Areas of Concern

① Training Area 31
② T-38 (Reservoir Ridge)
③ Smoke Ranges
④ T-4 Biological Warfare Area
⑤ Agent ID Area
⑥ Cane Creek Training Area
⑦ Naylor Field
⑧ Blacktop Training Area
⑨ Dog Training Area
⑩ Old Burn Pit
⑪ Field Personnel Decontamination Area
⑫ Old Toxic Training Area
⑬ Five Mustard Spill Sites (Not Shown)
⑭ Range 24A

Figure A-1. IHF Location and Ground Transportation Routes

The IHF has two monitoring ports for sampling the interior air of the IHF. Lightning protection will be installed in accordance with National Fire Protection Association (NFPA) Lightning Protection Code NFPA 78. The lightning protection will be tested in accordance with Army procedures. The IHF has an internal self-actuating, dry-chemical fire suppression unit and is constructed with 2-hour fire-rated walls.

2.3 Facility Location

FTMC is located in eastern Alabama approximately halfway between Birmingham, Alabama, and Atlanta, Georgia. FTMC is comprised of about 46,000 acres of wooded and hilly terrain. The IHF will be located at Facility 355 adjacent to the FTMC hazardous waste storage facility (Bldg. 348).

2.3.1 Surroundings. The FTMC IHF will be located at the edge of the installation cantonment area. The nearest regularly occupied building is more than 122 meters from the IHF. The IHF area is a concrete pad surrounded by trees and grass.

2.3.2 Weather. FTMC enjoys a subtropical climate of long warm summers with periods of hot and humid weather and short mild winters. The average annual precipitation is 53 inches of rain, which includes little snow. Temperatures above 37°C occur occasionally while temperatures below -17°C are very rare. Severe weather in the form of thunderstorms occurs occasionally with most of the rain produced in April through October coming from thunderstorms. Some of these thunderstorms produce tornadoes. Destructive winds from hurricanes seldom occur in the area since FTMC is over 200 miles from the nearest coast.

2.4 Chemical Warfare Materiel Characterization

For the purpose of this plan, the potential chemical agents and industrial chemicals that may be recovered at FTMC are mustard (H or HD), lewisite (L), nitrogen mustard (HN-1), phosgene (CG), cyanogen chloride (CK), chloropicrin (PS), or GA simulant and

sarin (GB). These chemicals may be found in CAIS, munitions, or in bulk containers. Only items confirmed or suspected of containing chemical agent H, HD, HN-1, L, or GB (and CG in the case of a munition) will be stored in the IHF. CAIS items confirmed of containing industrial chemicals (CG, CK, PS, or GA simulant) will be turned over to the U.S. Army Corps of Engineers, Mobile District (CESAM) and disposed of using appropriate methods.

For the remainder of this document, the acronym CWM will refer to any of the recovered items individually or collectively unless the information being presented pertains only to one kind of agent or one type of CWM.

2.5 Containment Equipment

All recovered CWM will be placed in MRCs for transportation and storage in the IHF. MRCs provide a safe and logistically sound overpack for chemical munitions. The types of MRCs that will be used at FTMC are the MRC 7 x 27, which will be used for the recovered munition and CAIS, and the 55-gallon drum overpack, which will be used for the drum containing HD. Other sizes of MRCs may be used depending on the shape and condition of recovered items. Figures A-2 and A-3 show diagrams of these containers. MRCs were designed to:

a. Meet the hazardous material packaging criteria required by the DOT
b. Meet Army container requirements for original munitions
c. Provide long-term storage capability
d. Provide capability to be shipped by ground and air transportation.

2.5.1 Multiple Round Container Leak Testing. With the addition of many tests that simulated the temperature and vibrations MRCs are likely to experience during their serviceable life, the test procedures for MRCs (including the MRC 7 x 27 and the 55-gallon drum overpack) exceeded DOT requirements. The goal of the testing is to

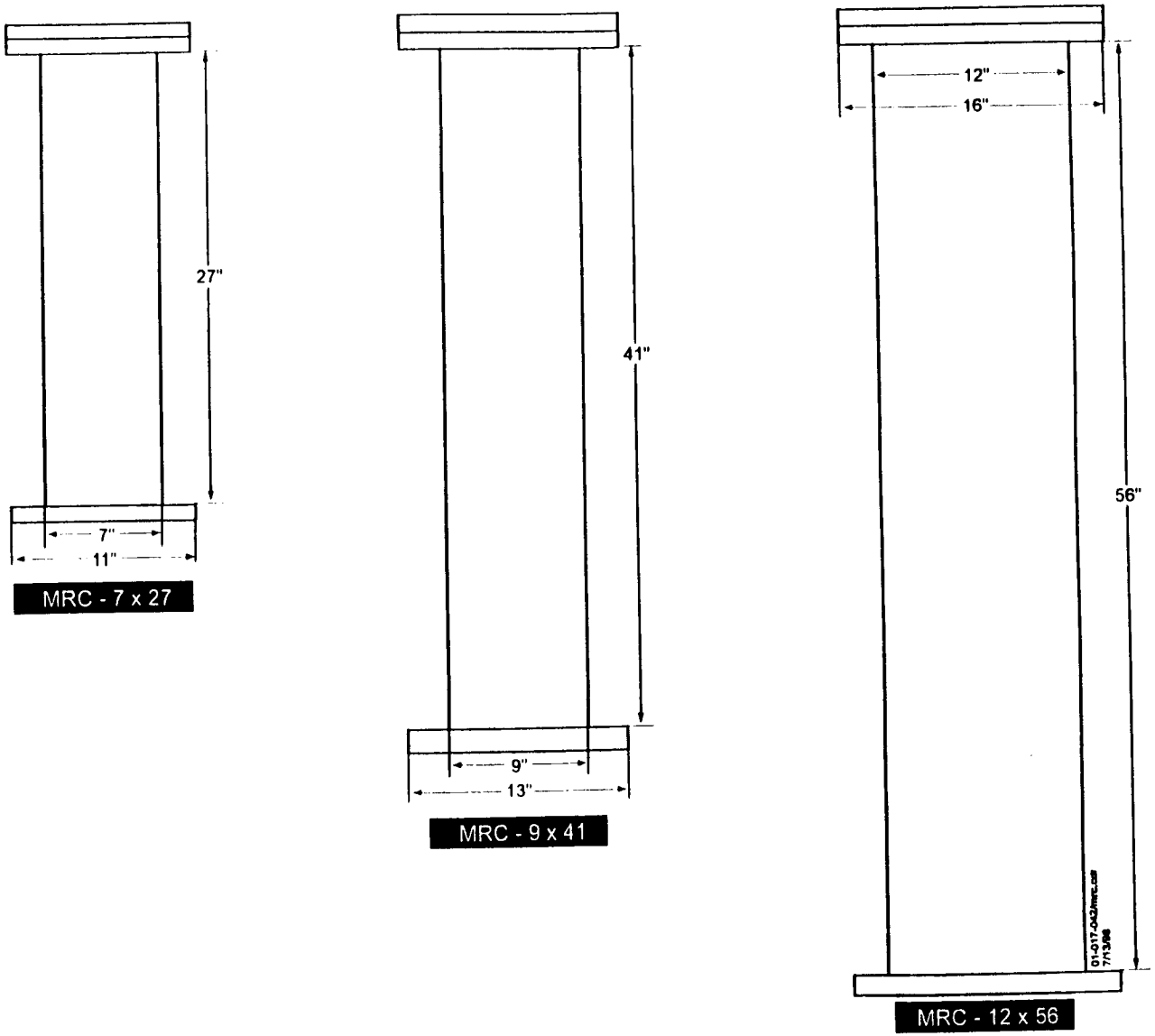

Figure A-2. Multiple Round Containers

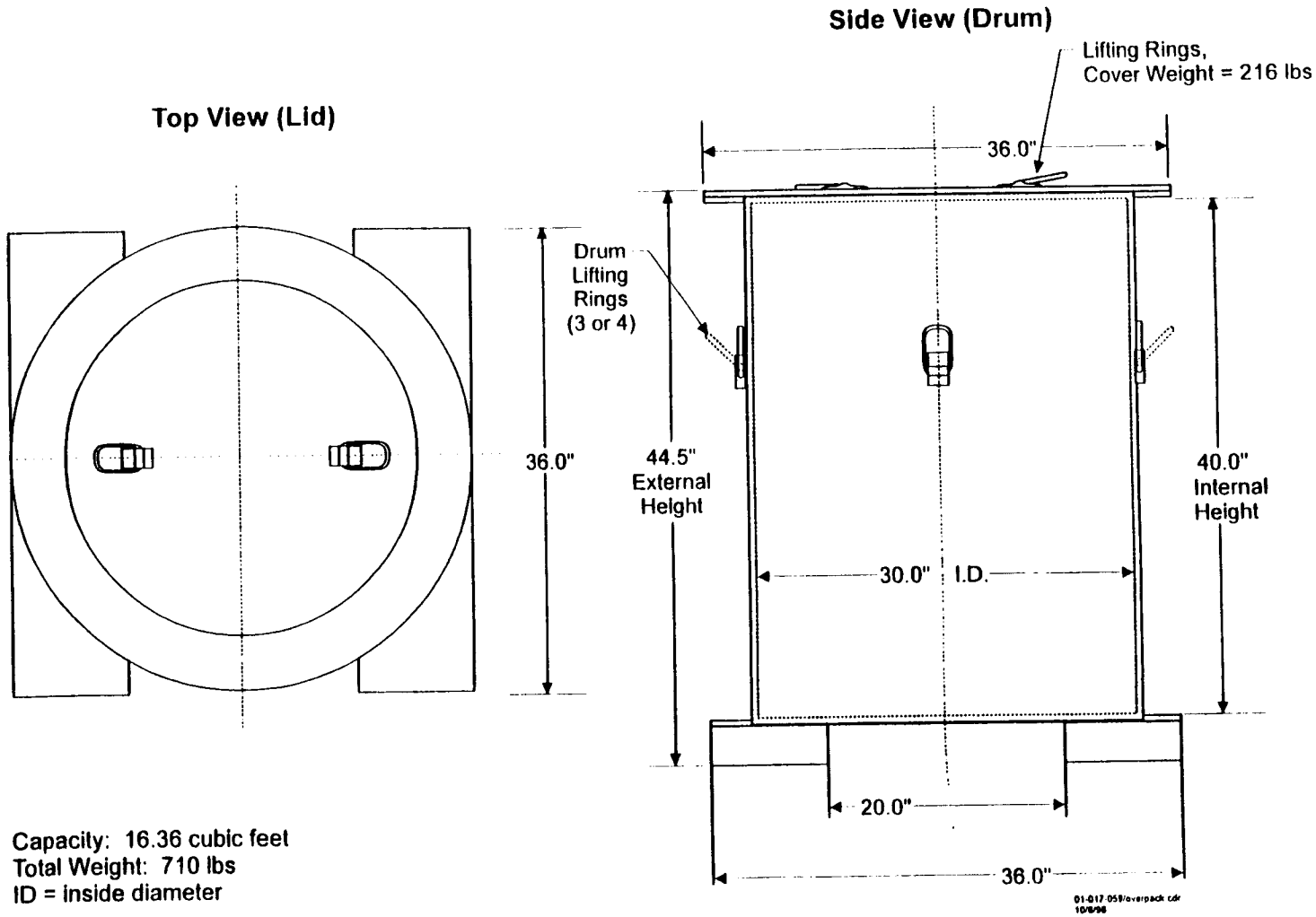

Figure A-3. 55-Gallon Drum Overpack

ensure the integrity, survivability, and serviceability of the containers through multiple reuses. At a minimum, the MRCs were subjected to tests in accordance with the following standards:

- American Society for Testing and Materiels (ASTM) E-499-73 Method A, Helium Leak Testing
- Military Standard (MIL-STD)-453C and MIL-STD-1264B, Radiographic Testing
- Technical Provision (TP)-94-01, Transportability Testing
- MIL-STD-810E Method 514.4, Low and High Frequency Tests
- United Nations Performance Oriented Packaging tests in accordance with 49 CFR Section 178.600, Testing of Non-bulk Packagings and Packages
- MIL-STD-1660 Tests, First Article Tests (compression, vibration, drop, and incline plane).

As a result of this rigorous testing, MRCs, including the MRC 7 x 27 and the 55-gallon drum overpack, have been approved by the DOT and the Army for transportation and storage of recovered CWM.

3. HAZARD ANALYSIS

To aid in the evaluation of identified hazards, potential incident and accident scenarios have been defined and RACs have been assigned in accordance with the NSCMP SSMP. The RACs are based on combinations of hazard severity categories and hazard probability (or frequency of occurrence) categories. Definitions of the hazard severity

and hazard probability categories are listed in tables A-1 and A-2, respectively, and the RAC matrix is given in table A-3.

Paragraphs 3.1 through 3.3 of this annex provide a narrative of potential hazard scenarios, the controls currently in place to mitigate each hazard, and recommendations that will reduce the severity of a hazard or the probability that it will occur, and hence, reduce the RAC ranking. Each hazard is assigned two RAC values. An initial RAC is assigned without accounting for accident prevention measures, while a controlled RAC takes into account efforts to mitigate either the probability that the hazard will result in an accident, or the severity of the accident should one occur. Both the initial RAC and the controlled RAC are reported in attachment A-1. Hazards assigned a RAC 1 or RAC 2 require corrective action prior to implementation of the IHF plan. A RAC 3 or RAC 4 represents that the operation can be conducted safely without any mitigation efforts. However, for RAC 3 hazards, reasonable efforts to reduce accident probability or severity must be implemented even when these efforts do not change the RAC rating.

3.1 Hazards During Storage

3.1.1 Aircraft Crashes into IHF Causing Agent Release. The initiator for this accident scenario is failure of a helicopter or fixed-wing aircraft that results in a crash into the IHF causing fire and a release of agent from the MRCs. The frequency of this event is considered improbable (probability category E) and severity is considered critical (severity category II). This results in the assignment of a RAC 3 (IIE). The structural integrity of the MRCs and the fact that any agent released that is not consumed by fire would be carried to a relatively high altitude by the heat of the fire before dispersing, tends to reduce the frequency of an agent release affecting people. However, the frequency of this event remains improbable (probability category E). The consequence associated with the event also remains critical (severity category II). Based on these frequency and consequence categories, the controlled RAC assigned to this event is RAC 3 (IIE).

Table A-1. Hazard Severity Categories

Description	Category	Mishap Definition
Catastrophic	I	May cause death, system loss, or severe environmental damage.
Critical	II	May cause severe injury, severe occupational illness, or major system or environmental damage.
Marginal	III	May cause minor injury, minor occupational illness, or minor system or environmental damage.
Negligible	IV	May cause less than minor injury, occupational illness, or less than minor system or environmental damage.

Source: Non-Stockpile Chemical Materiel Program System Safety Management Plan (U.S. Army, Chemical Materiel Destruction Agency, 1994).

Table A-2. Hazard Probability Categories

Frequency of Occurrence	Level	Description
Frequent	A	Will be continuously experienced.
Probable	B	Will occur frequently in the life of the system.
Occasional	C	Will occur several times in the life of the system.
Remote	D	Unlikely, but can reasonably be expected to occur in the life of the system.
Improbable	E	Unlikely, but possible to occur in the life of the system.

Source: Non-Stockpile Chemical Materiel Program System Safety Management Plan (U.S. Army, Chemical Materiel Destruction Agency, 1994).

Table A-3. Risk Assessment Codes

Frequency of Occurrence	Consequence Category			
	I Catastrophic	II Critical	III Marginal	IV Negligible
A - Frequent	1	1	1	3
B - Probable	1	1	2	3
C - Occasional	1	2	3	4
D - Remote	2	2	3	4
E - Improbable	3	3	3	4

Hazard Risk Index	Risk Assessment Code	Action Required
IA, IB, IC, IIA, IIB, IIIA	1	Unacceptable - immediate corrective action required. Asst. Sec. Army Decision.
ID, IIC, IID, IIIB	2	Undesirable - reduced priority, corrective action required. Project Manager for Non-Stockpile Chemical Materiel decision.
IE, IIE, IIIC, IIID, IIIE, IVA, IVB	3	Acceptable - low priority for corrective action (may not warrant action). System Safety Program Manager decision.
IVC, IVD, IVE	4	Acceptable - no corrective action required.

Source: Non-Stockpile Chemical Materiel Program System Safety Management Plan (U.S. Army, Chemical Materiel Destruction Agency, 1994)

3.1.2 Fires. Fires at the IHF may be ignited by lightning or spread from another fire in the vicinity of an IHF. Neither the MRCs nor the construction materials of the IHF are flammable. A fire is very unlikely to cause a failure of an MRC. This scenario is assigned a severity of II, critical, and an unmitigated probability of D, remote, resulting in an RAC of 2 (IID). The following mitigation procedures are recommended:

a. No unknown or flammable materials should be stored in the IHF.

b. Other heat sources should not be kept in close proximity to the IHF.

c. Lightning protection devices should be installed and tested in accordance with National Fire Protection Association (NFPA) 78, or equivalent code.

d. A firebreak should be maintained by removing combustible material (wood, packaging, leaves, long grass, etc.) within 50 feet of the IHF.

With these mitigation measures, the hazard probability is reduced to E, improbable, resulting in a mitigated RAC 3 (IIE).

3.1.3 Earthquake Damages IHF Causing Agent Release. The initiator for this accident is an earthquake that exceeds the design criteria for the IHF. The collapse of the IHF damages an MRC resulting in agent release. The structural design criteria for the IHF is a 0.4 g (acceleration due to gravity) earthquake. The probability of an earthquake of this magnitude during IHF operations is remote (probability category D), with a catastrophic consequence (severity category I). This results in a RAC 2 (ID). The ruggedness of the MRC and the light weight of the IHF rafters should prevent damage to the MRCs even if the building is damaged. This reduces the consequence to marginal (severity category III) with no change in probability. This event is assigned a controlled RAC 3 (IIID).

3.1.4 Agent Leak. An MRC containing a leaking CWM item could release chemical agent vapors if the MRC flange cover was not completely sealed. As a result, workers

could be exposed to danger. This scenario is assigned a severity of II, critical. Possible causes include minor defects in manufacturing of the MRCs, or incorrect assembly in the field. Both of these events are considered remote (probability D), resulting in an unmitigated RAC 2 (IID).

First entry monitoring will be conducted prior to entry into the IHF. TEU personnel are trained and equipped to conduct such monitoring, and to respond safely to any leaks detected. With this mitigation, the probability of worker injury is reduced to E, improbable, resulting in a mitigated RAC 3 (IIE).

3.1.5 Tornado Damages IHF Causing Agent Release. The initiator of this accident scenario is a tornado that would damage the structural integrity of the IHF. Tornadoes are likely in the vicinity of FTMC, but the probability of a tornado damaging the IHF is estimated as remote (probability category D), with a marginal consequence (severity consequence III). This results in a RAC 3 (IIID). Winds associated with tornadoes are dispersive in nature, which tends to minimize the exposure of the public to agent that may be released. The ruggedness of the MRC should prevent damage to an MRC even if the IHF is damaged. The consequence from this accident is expected to be negligible (severity category IV). There is no change in the probability category. Based on these frequency and consequence categories, the controlled RAC 4 (IVD) is assigned to this event.

3.1.6 Hurricane Damages IHF Causing Agent Release. The initiator of this accident scenario is a hurricane that would damage the IHF. The probability of this event is estimated to be remote (probability category D) and of critical consequence (consequence category II), for a RAC 2 (IID). The ruggedness of the MRC and light weight of the IHF rafters should prevent damage to an MRC even if the building is damaged. The consequence is considered to be negligible (severity category IV). There is no change in probability category. Based on these frequency and consequence categories, the controlled RAC assigned to this event is 4 (IVD).

3.2 Hazards During Handling

3.2.1 Multiple Round Container Improperly Sealed. A slow leak of chemical agent vapor could result if CWM is ruptured during movement and the MRC is not completely sealed. This event has a marginal consequence (category III) with an occasional frequency (occurrence category C) and is assigned a RAC 3 (IIIC). The container should be pressure checked before use and all gaskets and seals inspected. Surveillance monitoring will detect low-level leaks during storage. Implementing these recommendations reduces the frequency of occurrence to remote (category D), but the marginal consequence (category III) remains the same. This results in the assignment of a controlled RAC 3 (IIID).

3.2.2 Multiple Round Container Punctured. While loading or unloading the cargo truck or moving an MRC from the truck to the IHF, it is possible for the MRC to fall from the forklift to the ground. While falling, it is possible for the MRC to hit the edge of the forklift, or a protruding object. Due to the rigorous construction of the MRCs and the test results generated, it is expected that the MRC will not be punctured. This produces a severity category III (marginal) and a frequency of C (occasional) for a RAC 3 (IIIC). To reduce the likelihood of an MRC being dropped, forklift operators will be trained and certified for forklift operations, preventive maintenance will be performed on the forklift, the forklift will be equipped with a backup alarm, and a ground guide will be used to direct the forklift operator. Implementation of these mitigating measures reduces the accident frequency to improbable (probability category E), which results in a controlled RAC 3 (IIIE).

3.2.3 Dropping of a Multiple Round Container. An MRC may be dropped during loading or unloading operations. Drop testing indicates that there is little chance of an MRC being breached by the short drop that could occur during loading and unloading operations. If dropping an MRC causes the CWM inside to leak, cushioning material within the MRC would absorb the agent. This hazard is judged to be catastrophic (category I), but such an event is judged to be remote (category D). Therefore, a RAC 2

(ID) is assigned. To alleviate some of the possible dangers that could occur from dropping an MRC, it is recommended that workers minimize MRC handling. Implementation of this mitigator will reduce the frequency of an MRC being dropped and lead to an event judged to be improbable (category E). Therefore, a controlled RAC 3 (IE) is assigned.

3.2.4 Lifting Injuries. A worker might be injured while trying to lift an MRC. Lifting injuries are judged to be critical (severity category II), but such an event is judged to be remote (probability category D). Therefore, a RAC 2 (IID) is assigned. Workers are trained in lifting techniques to avoid back injuries. Mechanical lifting aids will be used when necessary. Implementation of these mitigators reduces the probability for this event to improbable (probability category E) with no change in severity category. This allows for an assignment of a controlled RAC 3 (IIE).

3.2.5 Crushing Injuries. The possibility of a worker being pinned or crushed between a transport vehicle and a stationary object must be considered. This hazard is judged to be catastrophic (category I) with its occurrence being remote (category D), resulting in assignment of a RAC 2 (ID). The IHF plan requires the use of ground guides. This procedure, combined with the requirements of a backup alarm on the truck and not allowing vehicles to be driven within 5 feet of the IHF, will further reduce the frequency to improbable (category E). Implementation of these mitigators results in a controlled RAC 3 (IE) for crushing injuries.

3.2.6 Pinching Injuries. Workers will be transporting MRCs from the recovery sites and the IHF. The possibility of a worker's hands or feet being pinched between two objects must be considered. Pinching hazards are considered to be remote (probability category D), but critical (severity category II), resulting in a RAC 2 (IID). Potential pinching hazards will be covered in the daily safety briefing. Workers will work in teams and wear leather gloves and safety shoes to reduce the probability and severity of injuries to hands and feet caused by pinching. Implementation of these mitigators

reduces the frequency to improbable (probability category E) with no change in severity category. This results in a controlled RAC 3 (IIE) for pinching hazards.

3.2.7 Tripping and Falling. Tripping and falling injuries are judged to be critical (severity category II), but such events are judged to be remote (probability category D). Therefore, a RAC 2 (IID) is assigned. Overpacks should be stored in the appropriate place, and as with other materials, should not be placed in aisles. Implementation of these mitigators reduces the frequency of the event to improbable (probability category E) with no change in severity category. This allows for an assignment of a controlled RAC 3 (IIE).

3.2.8 Improper Handling of Decontaminants. Decontaminants are available onsite for use during contingency operations. Table 2 of Army Technical Manual (TM) 60A-1-1-11 lists the following decontaminants:

- Decontaminating solution (DS2)
- Sodium hydroxide (caustic soda)
- Calcium hypochlorite (HTH)
- Sodium carbonate (washing soda)
- Alcoholic caustic solution.

Most of these materials are hazardous and require special handling. Exposure of workers may occur during the mixing of decontaminants or if a container is broken during handling. This scenario is assigned a severity of II, critical, and a probability of D, remote, resulting in a RAC 2 (IID).

TM 60A-1-1-11 specifies that workers wear PPE while mixing decontaminants. The U.S. Army Technical Escort Unit (TEU) personnel are trained in proper mixing techniques and in the proper selection and donning of PPE. With proper training and equipment, the severity is mitigated to III, marginal, resulting in a controlled RAC 3 (IIID).

3.3 Hazard During Onsite Transportation

3.3.1 Lightning Strike. The possibility of lightning striking the truck during onsite transportation should be considered. A lightning strike could result in a fuel fire and accident which could breach an overpack and release agent. Lightning striking the transport vehicle is considered to be improbable (probability category E) with a critical consequence (severity category I), giving this event a RAC 3 (IE). It is recommended that transportation occur only during clear weather. In addition, overpacks should be secured with tie-downs and braces. This mitigation would reduce the consequence to marginal (severity category III) with no change in probability category. This results in a controlled RAC 3 (IIIE).

3.3.2 Single or Multiple Vehicle Accident. The cargo truck could have an accident while transporting recovered CWM. The truck could be involved in a single-vehicle or multiple-vehicle accident, either of which could result in damage to an MRC and leaking of agent. Hazards that could result in a truck accident include mechanical malfunction, driver error, and an accident with a wild animal. These types of accidents are considered to be catastrophic (severity category I), but since the probability of an accident is considered improbable (probability category E), the resulting uncontrolled RAC is 3 (IE). An accident probability of 1.67×10^{-7} (see attachment A-2) was calculated for onsite transportation. The calculation takes into account such safety factors as using an experienced driver, driving in clear weather, and performing preventive maintenance on the truck. These safety measures will reduce the probability of an accident; however, the event retains the same severity and probability categories and is assigned a controlled RAC 3 (IE).

3.3.3 Tornado. If the truck carrying recovered CWM were struck by a tornado, an MRC could be breached and agent released. This would result in a RAC 2 (ID). Weather reports should be checked for indications of tornado activity before transport of the CWM. Transporting recovered CWM only during good weather, reduces the

likelihood of a tornado striking the truck to improbable, giving this event a controlled RAC 3 (IE).

4. MAXIMUM CREDIBLE EVENT

The maximum credible event (MCE) is defined as a worst-case accident scenario resulting in the release of chemical warfare agent and that has a reasonable probability of occurrence. The HA considered accident scenarios that could occur during storage, handling, and onsite transportation of recovered CWM sealed in MRCs and concluded that none of the accident scenarios met the requirement of being both credible and leading to a release of agent.

5. MITIGATION OF HAZARDS

Throughout the report, as possible events have been described, mitigating actions have been recommended. Table A-1-1 in attachment A-1 contains a summary of the handling, transportation, and storage events; possible incidents; and hazards associated with the incidents. In addition, the following paragraphs provide more specific information on how to mitigate hazards associated with handling, transporting, and storing CWM.

The location of the IHF separates it from public areas of the installation. MRCs are substantial and should reduce the possibility of an accidental release caused by natural events such as earthquakes or severe weather. The location is accessible by road. Two-way radio and cellular telephone communications are available.

First entry monitoring will be conducted in accordance with the IHF Plan. Monitoring will include low-level monitoring by MINICAMS® and a visual inspection of the MRCs. This inspection and monitoring will reduce the probability of leaks occurring and will preclude workers from unknowingly entering an immediately dangerous to life and health contaminated area.

When handling CWM, workers should minimize the handling of MRCs to reduce the likelihood of dropping one. Workers will wear work gloves, safety shoes, and use proper lifting techniques and lifting mechanisms. TEU personnel are trained in proper handling techniques and in the use of PPE.

For onsite transportation of CWM, low-level NRT monitoring of CWM will be performed prior to loading the CWM into an MRC, and the MRC will be monitored after it has been packed. Containers will not be stacked and bracing and tie-downs will be used to secure MRCs on the truck. The speed of the vehicle will be limited to 25 miles per hour.

To prevent toppling during storage, containers will not be stacked inside the IHF. Low-level NRT monitoring of the IHF will be performed. MRCs will not be stored in aisles, lightning protection will be provided on the IHF, and a fire break will be maintained around the IHF. Fire extinguishers will be available at all times.

TEU personnel will conduct recovery and IHF operations. They are trained in spill response procedures for the chemicals of concern. Emergency Response Plans are in place that identify procedures to implement and sources of assistance should there be an accident or incident. The use of PPE will protect TEU workers from hazards resulting from release of agent. Radio communication is available in the event of an accident.

Implementation of these mitigators can reduce both the severity and probability of hazards that can occur.

6. SUMMARY

A hazard assessment that encompasses the risk potential of handling, storing, and onsite transportation has been performed for the IHF at FTMC. The proposed site for the IHF is acceptable. Hazards were identified from the concept of operations and from historical information, and RACs were assigned based on consequence severity and

frequency of occurrence. There were 17 hazards identified; all were assigned a controlled RAC 3 or 4. A summary of the identified hazards, along with the assigned RACs are given in table A-4. It is concluded that the operation can be safely conducted.

Table A-4. Summary of Identified Hazards and Risk Assessment Codes

Item	Hazard	Uncontrolled RAC	Controlled RAC
	Storage		
01	Aircraft crashes into IHF causing agent release	3	3
02	Fires caused by lightning, improper location of flammable materials, electrical equipment malfunction, or other heat source	2	3
03	Earthquake damages IHF causing agent release	2	3
04	Agent leak caused by improper sealing of stored MRC	2	3
05	Tornado damages IHF causing agent release	3	4
06	Hurricane damages IHF causing agent release	2	4
	Handling		
07	MRC improperly sealed	3	3
08	MRC punctured	3	3
09	Dropping of an MRC	2	3
10	Lifting injuries	2	3
11	Crushing injuries	2	3
12	Pinching injuries	2	3
13	Tripping/falling injuries	2	3
14	Improper handing of decontaminants	2	3
	Onsite Transportation		
15	Lightning strike	3	3
16	Single- or multiple-vehicle accident	3	3
17	Tornado	2	3

Notes:

CWM = chemical warfare materiel
IHF = interim holding facility
MRC = multiple round container
RAC = risk assessment code

(This page intentionally left blank.)

ATTACHMENT A-1

HAZARD CONTROL LOG WORKSHEETS

Table A-1-1. IHF Hazards

Item	Hazardous Condition	Cause	Effect	RAC	Recommendation	Resolution	Controlled RAC	Remarks
Hazards During Storage								
001	Destruction of IHF	Aircraft crash	Fire; agent not consumed in fire becomes buoyant and is dispersed at height	3 (IIE)	No mitigation possible		3 (IIE)	
002	Fire at IHF	Electrical equipment malfunction, lightning, or other heat source ignites combustible material in vicinity of IHF	Possible agent release	2 (IID)	Do not store flammable materials in or near IHF; install electrical equipment in accordance with electrical code; maintain firebreak; provide lighting protection.		3 (IIE)	MRCs have not been fire tested but are expected to survive all but severe fires. Severe fires would consume agent.
003	Collapse of IHF	Earthquake	None; MRCs should survive	2 (ID)	No mitigation possible or required		3 (IIID)	Ruggedness of MRC should prevent damage.
004	Agent leak	MRC not sealed properly	Toxic atmosphere inside IHF	2 (IID)	Conduct monitoring prior to entry; respond to detected leaks in proper PPE.		3 (IIE)	TEU personnel are extensively trained in leak detection and response:

Table A-1-1. IHF Hazards (Continued)

Item	Hazardous Condition	Cause	Effect	RAC	Recommendation	Resolution	Controlled RAC	Remarks
005	Damage to IHF	Tornado	Release of agent	3 (IIID)	Perform operations during clear weather; use MRCs; have emergency response plan.		4 (IVD)	
006	Damage to IHF	Hurricane	Release of agent	2 (IID)	Perform operations during clear weather; secure MRCs.		4 (IVD)	Ruggedness of MRC should prevent damage.
Hazards During Handling								
007	Uncontrolled release of hazardous chemicals	MRC is not sealed properly or is not vapor tight	Slow leak of chemical agent vapor if CWM was broken during transport	3 (IIIC)	Monitor to detect low-level leaks.		3(IIID)	
008	Uncontrolled release of hazardous chemicals	MRC punctured in fall from forklift		3 (IIIC)	Use qualified equipment operators, avoid excessive moving of MRCs.		3 (IIIE)	
009	Uncontrolled release of hazardous chemicals	Dropping of an MRC		2 (ID)	Minimize handling of MRCs.		3 (IE)	
010	Personal injury	Lifting injury		2 (IID)	Train workers in good lifting techniques and use of mechanical lifting devices.		3 (IIE)	
011	Personal injury	Crushing injury		2 (ID)	Work in teams and use ground guides driving motorized equipment around other workers. Do not drive cargo vehicle within 5 feet of IHF or other structures.		3 (IE)	

Table A-1-1. IHF Hazards (Continued)

Item	Hazardous Condition	Cause	Effect	RAC	Recommendation	Resolution	Controlled RAC	Remarks
012	Personal injury	Pinching injury		2 (IID)	Wear work gloves and safety shoes. Include pinching injuries in safety briefing.		3 (IIE)	
013	Physical hazard	Tripping and falling	Personal injury	2(IID)	Store MRCs properly, keep walkways clear.		3(IIE)	
014	Chemical injury	Improper handling of decontamination chemicals	Personal injury	2(IID)	Train personnel in proper mixing techniques and PPE selection.		3 (IIID)	
Hazards During Onsite Transportation								
015	Fire	Lightning		3 (IE)	Conduct transport operations in good weather.		3 (IIIE)	
016	Truck accident	Single- or multiple-vehicle accident	Personal injury or release of agent	3(IE)	Close roads to other vehicles or use escort vehicles. Use only qualified drivers.		3(IE)	
017	Truck accident	Tornado	Personal injury or release of agent	2 (ID)	Check weather reports prior to travel. Execute road movement in good weather only.		3(IE)	

Notes:

AR = Army Regulation
CWM = chemical warfare materiel
IHF = interim holding facility
MRC = multiple round container
PPE = personal protective equipment
RAC = risk assessment code
TEU = U.S. Army Technical Escort Unit

(This page intentionally left blank.)

ATTACHMENT A-2

DERIVATION OF TRUCK ACCIDENT RATES

ATTACHMENT A-2
DERIVATON OF TRUCK ACCIDENT RATES

This attachment presents a derivation of truck accident rates for the specific road types to be used for transporting CWM from the recovery sites to the IHF. These accident rates are derived by modifying published highway truck accident rate data to account for situation-specific factors. The modifications are made on the basis of the analyst's judgment and supplementary accident data. This approach is taken because the published highway truck accident rates reflect average conditions – generally less stringent controls on traffic, speed, driver training, and other factors than will be the case for CWM transport. A similar analysis approach has previously been used for CWM transport and successfully defended (Rhyne et al., 1985 and 1988).

The truck accident rate data used as a basis for this analysis are described in section A-2.1. An analysis of the factors that affect accident rates and development of the adjusted rates used in this HA are presented in section A-2.2. In section A-2.3, the adjusted accident rates are coupled with mileage estimates for the chosen transport route to estimate the probability of a truck accident during the movement of CWM.

A-2.1 Truck Accident Rates By Highway Class

Truck accident rates have been compiled as a function of road type and surrounding population by various researchers since the early 1980s. The most widely cited values are those published by Harwood and Russell (1990). These rates are presented in table A-2-1. More recently, published data were reviewed for this analysis; however, the Harwood and Russell data are judged to be the best available. The "base" accident rate used in this analysis is the value for two-lane, rural roads, 2.19×10^{-6} accidents per mile. This road type is most similar to the types of roads that make up the CWM transport routes.

Table A-2-1. Truck Accident Rates by Highway Class

Roadway Type	Truck Accident Rate(accidents/mile)
Rural	
Two-lane	2.19×10^{-6}
Multilane, undivided	4.49×10^{-6}
Multilane, divided	2.15×10^{-6}
Freeway	6.40×10^{-7}
Urban	
Two-lane	8.66×10^{-6}
Multilane, undivided	1.39×10^{-5}
Multilane, divided	1.25×10^{-5}
Freeway	2.18×10^{-6}
One-way street	9.70×10^{-6}

Source: Harwood and Russell (1990)

A-2.2 Modification of Accident Rates

A partial listing of the factors that are believed to affect truck accident rates is shown in table A-2-2 (Harwood and Russell, 1990). Data are lacking to correlate accident rates with most of these factors. In addition, some of these factors (for example, time of day and type of truck) are constant for the chosen ground transportation route. The effects of such "global" factors on accident rates are discussed in section A-2.2.1.

Factors that are specific to certain portions of the route are discussed separately in section A-2.2.2.

Table A-2-2. Partial Listing of Factors Considered to Affect Truck Accident Rates

Truck Type or Configuration	Highway
Number of trailers	Function
Number of axles on tractor/trailer(s)	Access control
Cab type	Number of lanes
Cargo area configuration	Lane width
	Shoulder width
Truck Size and Weight	Shoulder surface
Width of trailer	Median width
Length, overall	Horizontal alignment
Length, trailer(s)	Vertical alignment
Empty/loaded	Surface condition (wet/dry/etc.)
Weight, gross	Pavement condition
Weight, trailer	Pavement type
Truck Operations	Traffic
Cargo type	Volume (average daily traffic)
Operator type	Volume (day/night)
Trip type	Percent trucks
Truck Driver	Environment
Age	Visibility
Experience with rig	Weather
Hours of service	Light
Driver condition	
	Temporal Factors
Location	Month/season of year
State	Day of week
Urban/rural	Time of day

Source: Harwood and Russell (1990)

A-2.2.1 Global Factors. Table A-2-3 shows the fractional distribution of truck accidents by accident type. The base case (column 2) shows the average accident distributions described in safety literature. Columns 3 through 6 show how various administrative controls and physical factors can effect accident distributions. The modified fractional distributions shown in the table reflect the cumulative effect of the listed factors, moving from left to right across the table. For example, the distribution shown for operation-specific factors also includes the effects of safe drivers. The effects of these administrative controls and physical factors on the accident type distribution and on accident rate are described in the following paragraphs.

Effects of Safe Drivers. TEU personnel who will operate the cargo trucks and escort vehicles are certified as being proficient. They have passed a physical examination as required by the Motor Carrier Safety Regulations. Their training includes en route procedures, accountability, load limitations, vehicle maintenance standards, and cargo-specific handling procedures. Before movement of any CWM, TEU personnel ensure that the vehicle maintenance documentation is current, inspect the transportation documentation, and inspect the loading of the CWM cargo. Each vehicle will have a driver and one assistant. The TEU Officer in Charge has the responsibility of ensuring that both are alert. The distance between vehicles will be at least one car length for each 10 miles per hour of vehicle speed. Truck speed should be limited to 25 miles per hour.

The TEU's safety practices are at least as sound as those of commercial trucking firms that emphasize a good safety culture. Trucking firms that strongly emphasize safety can achieve a factor of 10 reduction in accident rate (Anonymous, 1990; Anonymous, 1994; Wilson, 1990; U.S. Congress, Office of Technology Assessment, 1988). Truck drivers who reduce their overall accident rate do so primarily by reducing the number of accidents for which they are at fault and to a lesser extent by lowering the accident

Table A-2-3. Truck Accident Type Distributions

Tractor-Trailer Accident Type	Fractional Distribution				
	Base Case[a]	With Safe Drivers Considered	With Operation-Specific Factors Considered	With Escort Considered	With Road Closure Considered
Non-collision					
• Ran off road	0.062	0.00062	0.00012	0.00008	0.00008
• Jackknife	0.077	0.00077	0.00000	0.00000	0.00000
• Overturn	0.072	0.00072	0.00014	0.00009	0.00009
• Separation of units	0.004	0.00004	0.00000	0.00000	0.00000
• Fire	0.006	0.00006	0.00001	0.00001	0.00001
• Other	0.009	0.00009	0.00002	0.00001	0.00001
Collision with					
• Fixed object	0.114	0.00114	0.00023	0.00015	0.00015
• Parked vehicle	0.093	0.00093	0.00019	0.00013	0.00013
• Train	0.005	0.00005	0.00000	0.00000	0.00000
• Non-motorist (for example, pedestrian)	0.015	0.00015	0.00000	0.00000	0.00000
• Other	0.034	0.00034	0.00007	0.00005	0.00005
Multiple-vehicle accident					
• Head-on collision	0.015	0.00280	0.00056	0.00028	0.00002
• Rear-end collision	0.133	0.02490	0.00498	0.00249	0.00025
• Sideswipe	0.185	0.03460	0.00692	0.00346	0.00017
• Angle	0.103	0.01930	0.00386	0.00193	0.00010
• Other	0.070	0.01310	0.00262	0.00131	0.00006
TOTAL	0.997	0.09960	0.01972	0.00999	0.00102
Net Reduction Factor	1	10	50	100	977

[a] Source: Harwood and Russell (1990)

rates of other truck and car drivers by driving defensively. A driver has much more control over single-vehicle accidents than multiple vehicle accidents; safe drivers cannot always prevent other drivers from causing multiple-vehicle accidents.

The second column of table A-2-3 shows the fractional distribution of accident types for average truck drivers, and the third column of this table shows the estimated distribution of accident types for safe drivers (that is, those who achieve a factor of 10 reduction in accident rate). Safe driving practices are most effective in lowering the rate of single-vehicle accidents. Therefore, the distribution in the third column was obtained by (1) lowering the fraction of single-vehicle accident types by a factor of 100 and (2) lowering the fractions of multiple-vehicle accident types such that the overall accident rate reduction factor is 10, as reported in the literature. Mathematically, this procedure is expressed as follows:

$$\frac{A}{100} + \frac{B}{X} = \frac{0.997}{10}$$

where:

A = Fraction of single-vehicle accidents

B = Fraction of multiple-vehicle accidents

X = Reduction factor to be determined for multiple-vehicle accidents.

Values of A and B are obtained from the second column of table A-2-3. Application of this model yields an accident rate reduction factor of 5.34 for multiple-vehicle accidents.

Effects of Operation-Specific Factors. The following factors are expected to produce an additional factor of 5 reduction in accident rate for all accident types.

- Transport of CWM will only occur in good weather.

- Transport of CWM will only occur during daylight hours.

- Trips will be short, which will minimize boredom and fatigue.

- Line-of-sight conditions along the chosen route will be excellent.

- Drivers of vehicles with CWM cargo will be expected to be even more cautious than the typical safe commercial truck driver.

- The TEU's management is more effective than the management of the average trucking firm.

The net result of these considerations is an additional factor of 5 reduction in accident rate. The combination of safe drivers and these operation-specific factors can be expected to reduce the accident rate by a factor of 50 below the published value for two-lane, rural roads.

Effects of Escorting the Cargo Truck. An escort vehicle will precede the cargo truck during ground transportation of CWM. The escort vehicle will be marked with warning signs. Oncoming traffic will not be stopped, and same-direction passing will not be prohibited. The presence of the escort vehicle will alert drivers of other vehicles, thus reducing the rate of multiple-vehicle collisions by a factor of at least 2. The escort vehicle will also reinforce safe driving requirements on the driver of the cargo vehicle; therefore, the rate of single-vehicle collisions is expected to be reduced by an additional factor of 1.5. The overall effect of escorting on the estimated accident rate is a factor of 2 reduction above the reductions achieved by safe driving and operation-specific factors. The cumulative effect of the global factors (safe drivers, operation-specific factors, and escorting) is then a factor of 100 reduction in accident rate, leading to a modified rate of 2.19×10^{-8} accidents per mile.

Effects of Closing Roads. Though road closures are not planned for this project, the rate of most multiple-vehicle accidents could be reduced by an additional factor of 20 by closing the roads along the chosen routes to all other traffic during the CWM transfers.

Such accidents would not be completely eliminated because of the possibility of persons ignoring road closure signs and barricades. The rate of rear-end collisions would only be reduced by an estimated factor of 10 by this action because the escort vehicle could be involved in a rear-end collision with the cargo truck. Single-vehicle accident rates would not be reduced by closing roads.

Closing the roads along the routes to other traffic would further reduce the expected accident rate by approximately a factor of 10.

The cumulative effect of the global factors (safe drivers, operation-specific factors, and escorting) reduces the accident rate by a factor of 100, yielding a modified rate of 2.19×10^{-8} accidents per mile.

A-2.2.2 Route Segment-Specific Factors

The ground transportation routes to the IHF are all two-lane, rural. As discussed previously, the effect of safe drivers, operation-specific factors, and escorting reduces the accident yield by a factor of 100, yielding a modified rate of 2.19×10^{-8} accidents per mile. The accident rate will not increase or decrease based upon local factors and will remain at 2.19×10^{-8} for all ground transportation segments.

A-2.3 Summary

The modified accident rates for the various route segments are shown in table A-2-4 along with the total mileage for each segment. The product of accident rate (accidents per mile) and the mileage for a segment yields the probability of experiencing an accident on that segment for a given trip. The probabilities for the segments in a given route are summed to estimate the accident probability for the route.

Table A-2-4. Modified Accident Rates and Accident Probabilities for Ground Transportation Route

Route Segment	Accident Rate (per mile)	Segment Length (miles)	Number of Trips	Accident Probability
AOC 1 to IHF	2.19×10^{-8}	1.2	1	2.63×10^{-8}
AOC 2 to IHF	2.19×10^{-8}	1.1	2	4.92×10^{-8}
AOC 3 to IHF	2.19×10^{-8}	1.0	1	2.19×10^{-8}
AOC 24 to IHF	2.19×10^{-8}	3.2	1	7.01×10^{-8}
Total ground transport accident probability				1.67×10^{-7}

Note:

AOC = area of concentration
IHF = interim holding facility

(This page intentionally left blank.)

ANNEX B

CHEMICAL AND PHYSICAL DATA

Table B-1. Chemical and Physical Properties of Chemical Agents of Concern

Chemical Name	Levinstein Mustard (H) 70% bis (2-Chloroethyl) sulfide 30% Higher Molecular Weight Polysulfides	Distilled Mustard (HD) Diethyl, 2,2-dichloride sulfide [bis(2-Chloroethyl) sulfide]	Nitrogen Mustard (HN-1) 2,2'-dichlorotriethyl amine	Sarin (GB) Isopropyl methyl phosphonofluoridate	Lewisite (L) Dichloro (2-chlorovinyl) arsine
Short Name	Levinstein Mustard (H)	Distilled Mustard (HD)	Nitrogen Mustard (HN-1)	Sarin (GB)	Lewisite (L)
Chemical Formula	$C_4H_8Cl_2S$	$C_4H_8Cl_2S$	$C_6H_{13}Cl_2N$	$C_4H_{10}O_2PF$	$C_2H_2AsCl_3$
Molecular Weight	159.08 (pure mustard)	159.08	170.08	140.1	207.32
Physical State	Amber to brown oily liquid	Pale yellow oily liquid	Pale amber to yellow oily liquid	Colorless liquid	Colorless to brownish liquid
Vapor Density (relative to air)	Generally exceeds 5.5	5.5	5.9	4.9	7.2
Liquid Density	1.27 g/mL at 25°C	1.27 g/mL at 25°C	1.09 g/mL at 25°C	1.09 g/mL at 25°C	1.89 g/mL at 20°C
Solid Density	N/A	Crystal, 1.37 g/cm^3 at 0°C	N/A	N/A	N/A
Normal Freezing Point	8°C	14.45°C	-34°C	-56°C	-18°C ± at 0.1°C
Boiling Point	Decomposes at about 180°C	217°C extrapolated	66°C at 3 torr 88.5°C at 12 torr 194°C at 760 torr Decomposes before boiling at 760 torr	158°C	190°C
Vapor Pressure	Impurities tend to lower vapor pressure below 0.11 mm Hg	0.11 mm Hg at 25°C	0.25 mm Hg at 25°C	2.9 mm Hg at 25°C	0.394 mm Hg at 20°C
Volatility	Approximately 920 mg/m^3 at 25°C (reported for HD)	610 mg/m^3 at 20°C 920 mg/m^3 at 25°C	2,290 mg/m^3 at 25°C	4,100 mg/m^3 at 0°C 22,000 mg/m^3 at 25°C 29,800 mg/m^3 at 30°C	4,480 mg/m^3 at 20°C
Viscosity	3.95 centistokes at 25°C (HD)	3.95 centistokes at 25°C	N/A	N/A	2.05 centipoise at 77°F
Solubility	0.092 g/100 g H_2O at 22°C. Completely soluble in acetone, CCl_4, CH_3Cl tetrachloroethane, ethyl benzoate, and ether. Completely soluble in 92.5% ethanol above 28.6°C.	0.092 g/100 g H_2O at 22°C. Completely soluble in acetone, CCl_4, CH_3Cl tetrachloroethane, ethyl benzoate, and ether. Completely soluble in 92.5% ethanol above 28.6°C.	Very slightly soluble in water. Freely soluble in acetone and other organic solvents.	Soluble in water.	Insoluble in water and dilute mineral acids. Soluble in organic solvents and oils. Miscible with other chemical warfare agents.
Heat of Combustion	4,500 cal/g	756.03 kcal/mole	N/A	N/A	N/A
Latent Heat of Vaporization	94 cal/g	94 cal/g	N/A	80 cal/g	58 cal/g
Latent Heat of Fusion	26.5 cal/g	26.5 cal/g	N/A	N/A	Unknown
Special Properties			Polymerizes slowly. Hydrolyzes slowly in water.	Decomposes at 150°C	

Table B-1. Chemical and Physical Properties of Chemical Agents of Concern (Continued)

Chemical Name	Levinstein Mustard (H) 70% bis (2-Chloroethyl) sulfide 30% Higher Molecular Weight Polysulfides	Distilled Mustard (HD) Diethyl, 2,2-dichloride sulfide [bis(2-Chloroethyl) sulfide]	Nitrogen Mustard (HN-1) 2,2'-dichlorotriethyl amine	Sarin (GB) Isopropyl methyl phosphonofluoridate	Lewisite (L) Dichloro (2-chlorovinyl) arsine
Flash Point	105°C	105°C (Can be ignited by large explosive charges)	High enough not to interfere with military use	Nonflammable	Does not flash
DOT Classification	Poison A	Poison A	Poison A	Poison A	Poison A
Corrosivity	Brass rapidly corroded. Cast iron poor	Brass rapidly corroded at 65°C; 0.0001 inch/month at 65°C on steel	Corrosive to ferrous alloys beginning at 65°C	Slightly corrosive to steel	None if dry
Decontaminants	Bleaching powder, sodium hypochlorite	Bleaching powder, sodium hypochlorite, fire	Bleach, fire	Bleach slurry, dilute alkali, hot soapy water	Bleach powder, sodium hypochlorite, fire, caustic soda
Stabilizers Commonly Used	Can be stabilized with acridine or naphthoquinoline	Can be stabilized with acridine or naphthoquinoline	N/A	None	

Notes:

cal/g = calorie per gram
DOT = Department of Transportation
g = gram
g/cm^3 = gram per cubic centimeter
g/mL = gram per milliliter
kcal = kilocalorie
mg/m^3 = milligram per cubic meter
mm Hg = millimeters of mercury
N/A = not available

Table B-2. Chemical and Physical Properties of Industrial Chemicals of Concern

Chemical Name	Phosgene (CG) Carbonyl Chloride	Chloropicrin (PS)	Cyanogen Chloride (CK)	Chloroform, Trichloromethane	Benzonitrile (GA Simulant)	Ethyl Malonate (GA Simulant) (Diethyl malonate)	Ethyl Heptanoate (Ethyl Oenanthate; heptanoic acid ethyl ester; ethyl n-heptoate; oenanthic ether; congnac oil, synthetic; oil of grapes)
Short Name	Phosgene (CG)	Chloropicrin (PS)	Cyanogen Chloride (CK)	Chloroform	Benzonitrile (GA Simulant)	Ethyl Malonate (GA Simulant)	Ethyl Malonate (GA Simulant)
Chemical Formula	CCl_2O	Cl_3CNO_2	CCIN	$CHCl_3$	C_7H_5N	$C_7H_{12}O_4$	$C_9H_{18}O_2$
Molecular Weight	98.92	164.38	61.48	119.4	103.12	160.17	158.24 gram/mole
Physical State	Colorless gas at room temperature	Slightly oily liquid	Colorless liquid	Colorless liquid	Liquid, odor of volatile oil of almond	Colorless liquid with sweet ester odor	Colorless liquid
Vapor Density (relative to air)	3.4	5.6	2.1	4.13	3.6	5.52	N/A
Liquid Density	1.37 g/mL at 20°C	1.66 g/mL at 20°C	1.186 g/mL at 20°C	1.47 g/mL at 20°C	1.010 g/mL at 15°C	1.055 g/mL	0.863 g/mL at 25°C
Solid Density	N/A	N/A	N/A	N/A	N/A	N/A	N/A
Normal Freezing Point	-128°C	-69.2°C	-6.9°C	-63.5°C	-12.75°C	-50°C	-66°C
Boiling Point	7.6°C	112°C	13.8°C	61.2°C	188 to 191°C	199°C	189°C
Vapor Pressure	1,400 mm Hg at 25°C 1,173 mm Hg at 20°C	18.3 mm Hg at 20°C	1,000 mm Hg at 25°C	159 mm Hg at 20°C	1 mm Hg at 20°C	1 mm Hg at 40°C	N/A
Volatility	4,300,000 mg/m^3 at 7.6°C	165,000 mg/m^3 at 20°C	6,132,000 mg/m^3 at 25°C	100% at 20°C	N/A	N/A	N/A
Viscosity	0.27 centistokes at 0°C	N/A	N/A	N/A	1.054 centistokes at 100°F	N/A	0.0111 g/cm/sec at 25°C
Solubility	Very slight solubility in water and decomposed by it. Freely soluble in benzene, toluene, glacial acetic acid, and most organic solvents.	Insoluble in water. Soluble in organic solvents, liquid organophosphorus compounds, mustards, phosgene, diphosgene, and Cl_2.	Soluble in water (6.9 g/100 g H_2O at 20°C), alcohol, and ether. Many mixtures with organic solvents are unstable.	0.79 g/100 g H_2O at 20°C. Miscible with alcohol, benzene, ether, carbon tetrachloride, carbon disulfide, and oils.	1 g/100 g H_2O at 100°C. Miscible with common organic solvents.	1 g/50 mL H_2O, miscible with alcohol and ether.	Insoluble in water. Miscible with alcohol, ether, chloroform.
Heat of Combustion	41.8 kcal/mole	N/A	N/A	N/A	N/A	N/A	N/A
Latent Heat of Vaporization	59 cal/g	57.3 cal/g	103 cal/g	N/A	N/A	N/A	N/A
Latent Heat of Fusion	N/A	N/A	41.8 cal/g	N/A	N/A	N/A	N/A
Special Properties	Decomposes at 800°C. Reacts with water to form HCl and CO.		Polymerizes in water; decomposes above 100°C. CK will stand for 30 days at 65°C without excessive decomposition; polymerizes between 40 and 60 days to form $CNCl_3$, a solid. May explode.	Pure chloroform is light sensitive and is usually stabilized with 0.75% ethanol.			

Table B-2. Chemical and Physical Properties of Industrial Chemicals of Concern (Continued)

Chemical Name	Phosgene (CG) Carbonyl Chloride	Chloropicrin (PS)	Cyanogen Chloride (CK)	Chloroform, Trichloromethane	Benzonitrile (GA Simulant)	Ethyl Malonate (GA Simulant) (Diethyl malonate)	Ethyl Heptanoate (Ethyl Oenanthate; heptanoic acid ethyl ester; ethyl n-heptoate; oenanthic ether; congnac oil, synthetic; oil of grapes)
Flash Point	Does not flash	Not flammable, but with strong ignition-heated material in confinement will detonate	Does not flash	Nonflammable	71°C	100°C	66°C (151°F)
DOT Classification	Poison A	Poison A	Poison A	Poison A	Poison	Not Regulated	N/A
Corrosivity	Not corrosive when dry, no appreciable corrosion of steel. Extremely corrosive in presence of moisture.	If dry, has little or no effect on metals	Not corrosive, will polymerize to form solid cyanuric chloride which is corrosive	Chemically active with metals such as aluminum or magnesium powder, sodium, and potassium	N/A	N/A	N/A
Decontaminants	Water followed by 10% solution of caustic soda or sodium carbonate	Large amounts of water or rinse with 5% solution of bisulfite	Aeration, NaOH solution	Sand, diatomaceous earth, and kitty litter are used as absorbent material	Sand, diatomaceous earth, and kitty litter are used as absorbent material	Sand, diatomaceous earth, and kitty litter are used as absorbent material	Large amounts of water
Stabilizers Commonly Used	Stable when dry		Lab sample - 5% anhydrous, powdered TSPP; propylene oxide; or $AsCl_3$	0.75% Ethanol			

Notes:

cal/g = calorie per gram
DOT = Department of Transportation
DS2 = decontaminating solution number 2
g = gram
g/cm^3 = gram per cubic centimeter
g/mL = gram per milliliter
kcal = kilocalorie
mg/m^3 = milligram per cubic meter
mm Hg = millimeters of mercury
N/A = not available
NaOH = sodium hydroxide
TSPP = tetrasodium pyrophosphate

ANNEX C

MATERIAL SAFETY DATA SHEETS

ANNEX C

MATERIAL SAFETY DATA SHEETS

The following pages provide examples of Material Safety Data Sheets (MSDSs) for the chemical agents discussed in this document. Preference was given to Department of Army data sheets prepared by Edgewood Chemical Biological Center (ECBC) [formerly Edgewood Research, Development and Engineering Center (ERDEC)].

Distilled Mustard (HD) - Edgewood Research, Development and Engineering Center, 28 February 1998.

Levinstein Mustard (H) - Department of the Army, Special Report EO-SR-74001, Chemical Agent Data Sheets, Volume 1, pp. 29 through 31, December 1974.

Lewisite (L) - Edgewood Research, Development and Engineering Center, 27 March 1996.

Nitrogen Mustard (HN-1) - Edgewood Research, Development and Engineering Center, 12 January 1990.

Sarin (GB) - Edgewood Research, Development and Engineering Center, 28 February 1998.

Chloroform - Mallinckrodt Inc., 1 January 1987.

Phosgene (CG) - Sigma Aldrich Corporation, October 1994.

Cyanogen Chloride (CK) - TBD

Chloropicrin (PS) - Vermont Safety Information Resources, Inc., 1 January 1985

GA-simulant: **Benzonitrile** - Aldrich Chemical, 8 January 1992.

Diethyl Malonate - Fluka Chemical Corp., 2 June 1994.

Ethyl Heptanoate – Aldrich Chemical, 9 May 1995.

1. Chemical Code or EA Number: H

2. Chemical Name: Levinstein Mustard. Composed of about 70% Bis (2-chloroethyl) sulfide and 30% of usually higher MW polysulfides.

3. Chemical Formulae:

   a. Empirical.

   b. Structural.

4 - 17. Most Levinstein H consists of about 70% pure H with about 30% of polysulfides. The percent of pure H in Levinstein H varies from sample to sample and therefore no specific data can be given on its colligative properties.

The biological properties of H are similar to those given for HD (q.v.).

18. Molecular Weight: Average MW varies with purity, but is generally higher than that of pure mustard (159.08).

19. Purity Range (average):

   a. Laboratory Sample.

   b. Plant Sample. 64 to 69 wt%.

20. Physical Appearance: Amber to dark brown liquid.

21. Vapor Density, Relative to Air: Varies with MW, generally exceeds value for HD of 5.5.

22. Liquid Density: 1.27 g/ml @ 25° C; fairly constant, independent of product purity.

23. Solid Density:

   a. Bulk Density. Not applicable.

   b. Crystal Density. Not applicable.

Levinstein Mustard

24. Normal Freezing Point or Melting Point: approx. 8° C.

25. Boiling Point: Varies with product composition; decomposes around 130° C.

26. Vapor Pressure :

No general value since vapor pressure varies with purity of sample. High molecular weight impurities of H tend to lower vapor pressure below 0.11 torr reported for HD.

27. Volatility: approx. 920 mg/m^3 @ 25° C (reported for HD).

28. Viscosity: See HD.

29. Flash Point: 105° C.

30. Autoignition Temperature: Unknown.

31. Latent Heat of Vaporization: In the range of 94 cal/g reported for HD.

32. Latent Heat of Fusion: See HD.

33. Vapor-Air-Explosive Hazard Range: Not available.

34. Relative Persistency:

a. Soil. Persistent.

b. Surface (Wood, Methal, Masonry, Rubber, Paint).

c. Water. Persistent due to low solubility.

35. Solubility: Similar to HD.

36. Thermal Decomposition Rate (half-life): See HD.

37. Heat of Combustion: 4500 cal/g (calculated from bomb calorimetry for products given in Item 38).

38. Products of Combustion: CO_2, Cl_2, H_2O, H_2SO_4, HCl (bomb calorimetry).

39. Rate of Hydrolysis: See HD.

40. Hydrolysis Products: See HD.

41. Corrosive Properties: Brass rapidly corroded; cast iron poor.

42. Detection Methods and Equipment:

Spotted Disk (SD) Test, Dragendorff Test.

For Liquid: ABCM8 detector paper; M5A1 detector paper.
For Vapor: M15A2, M18A2, M19 kits
(DB-3 Test, blue band detector tube)

43. Decontaminants:

a. Personnel. Flush eyes with H_2O. Protective ointment M1, M5 ointment; M13 kit (liquid on skin). M13 Kit - outer clothing. Shower with soap and water.

b. Equipment. Bleaching powder, DANC, DS2, sodium hypochlorite, fire.

c. Areas. Terrain: Aeration. STB slurry applied by M9 or M12A1 decontaminating apparatus.

44. DOT Classification: Poison A.

45. Stabilizer Utilized:

a. Laboratory Sample. See HD.

b. Production Sample.

46. Types of Containers Required for Storage:

a. RDT&E Quantities. Glass.

b. Stockpile Quantities. One-ton containers, 55-gallon steel drums, steel cylinders.

47. O-D Classification: 3
Compatability Group: A
Chemical Group: A

(This page intentionally left blank.)

MATERIAL SAFETY DATA SHEET

DISTILLED MUSTARD (HD)

SECTION I - GENERAL INFORMATION

DATE: 22 September 1988
REVISED: 28 February 1996

MANUFACTURER'S ADDRESS:

U.S. ARMY CHEMICAL BIOLOGICAL DEFENSE COMMAND
EDGEWOOD RESEARCH DEVELOPMENT, AND ENGINEERING CENTER (ERDEC)
ATTN: SCBRD-ODR-S
ABERDEEN PROVING GROUND, MD 20101-5423

Emergency telephone #' s: 0700-1630 EST: 410-671-4411/4414
After: 1630 EST: 410- 278-5201, Ask for Staff Duty Officer

CAS REGISTRY NUMBERS: 505-60-2, 39472-40-7, 68157-62-0

CHEMICAL NAME:

Bis-(2-chloroethyl)sulfide

TRADE NAMES AND SYNONYMS:

Sulfide, bis (2-chloroethyl)
Bis(beta-chloroethyl)sulfide
1,1'-thiobis(2-chloroethane)
1-chloro-2(beta-chloroethylthio)ethane
Beta, beta'-dichlorodiethyl sulfide
2,2'dichlorodiethyl sulfide
Di-2-chloroethyl sulfide
Beta, beta'-dichloroethyl sulfide
2,2'-dichloroethyl sulfide

H; HD; HS
Iprit
Kampstoff "Lost"; Lost
Mustard Gas
S-Lost; S-yperite; Schewefel-lost
Senfgas
Sulfur mustard; Sulphur mustard gas
Yellow Cross Liquid
Yperite
Y

CHEMICAL FAMILY: Chlorinated sulfur compound

FORMULA/CHEMICAL STRUCTURE:
C4H8Cl2S

$$ClCH_2CH_2-S-CH_2CH_2Cl$$

NFPA 704 HAZARD SIGNAL:

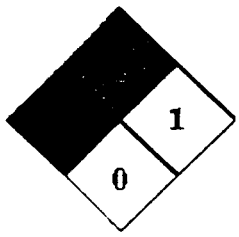

Health - 4
Flammability - 1
Reactivity - 1
Special - 0

SECTION II - HAZARDOUS INGREDIENTS

INGREDIENTS NAME	FORM ULA	PERCENTAGE BY WEIGHT	AIRBORNE EXPOSURE LIMIT (AEL)
Sulfur Mustard	C4H8Cl2S	100	0.003 mg/m3

SECTION III - PHYSICAL DATA

BOILING POINT: 422 F 217 C

VAPOR PRESSURE (mm Hg):

0.072 mm Hg @ 20 C
0.11 mm Hg @ 25 C

VAPOR DENSITY (AIR=1): 5.5

SOLUBILITY IN WATER: Negligible. Soluble in fats and oils, gasoline, kerosene, acetone, carbon tetrachloride, alcohol, tetrachloroethane, ethylbenzoate, and ether. Miscible with the organophosphorus nerve agents.

SPECIFIC GRAVITY (H2O=1): 1.27 @ 20 C

FREEZING POINT: 14.45 C

LIQUID DENSITY (g/cc):

1.268 @ 25 C
1.27 @ 20 C

PERCENTAGE VOLATILE BY VOLUME:

610 mg/m3 @ 20 C
920 mg/m3 @ 25 C

APPEARANCE AND ODOR: Normally amber to black colored liquid with garlic or a horseradish odor. Water clear if pure. The odor threshold for HD is 0.6 mg/m3 (.0006 mg/L).

SECTION IV - FIRE AND EXPLOSION DATA

FLASHPOINT : 105 C (Can be ignited by large explosive charges)

FLAMMABILITY LIMITS (% by volume): Unknown

EXTINGUISHING MEDIA: Water, fog, foam, CO2. Avoid use of extinguishing methods that will cause splashing or spreading of HD.

SPECIAL FIRE FIGHTING PROCEDURES: All persons not engaged in extinguishing the fire should be immediately evacuated from the area. Fires involving HD should be contained to prevent contamination to uncontrolled areas. When responding to a fire alarm in buildings or areas containing agents, firefighting personnel should wear full firefighter protective clothing (without TAP clothing) during chemical agent firefighting and fire rescue operations. Respiratory protection is required. Positive pressure, full face piece, NIOSH-approved self-contained breathing apparatus

(SCBA) will be worn where there is danger of oxygen deficiency and when directed by the fire chief or chemical accident/incident (CAI) operations officer. In cases where firefighters are responding to a chemical accident/incident for rescue/reconnaissance purposes they will wear appropriate levels of protective clothing (See Section VIII).

Do not breathe fumes. Skin contact with agents must be avoided at all times. Although the fire may destroy most of the agent, care must still be taken to assure the agent or contaminated liquids do not further contaminate other areas or sewers. Contact with the agent liquid or vapor can be fatal.

SECTION V - HEALTH HAZARD DATA

AIRBORNE EXPOSURE LIMIT (AEL): The AEL for HD is 0.003 mg/m3 as found in "AR 40-173, Occupational Health Guidelines for the Evaluation and Control of Occupational Exposure to Mustard Agents H, HD, HT." To date, the Occupational Safety and Health Administration (OSHA) has not promulgated a permissible exposure concentration for HD.

EFFECTS OF OVEREXPOSURE: HD is a vesicant (causing blisters) and alkylating agent producing cytotoxic action on the hematopoietic (blood-forming) tissues which are especially sensitive. The rate of detoxification of HD in the body is very slow and repeated exposures produce a cumulative effect. HD has been found to be a human carcinogen by the International Agency for Research on Cancer (IARC).

Median doses of HD in man are:
LD50 (skin) = 100 mg/kg ICt50 (skin) = 2000 mg-min/m3 at 70 - 80 F (humid environment) = 1000 mg-min/m3 at 90 F (dry environment)

ICt50 (eyes) = 200 mg-min/m3

ICt50 (inhalation) = 1500 mg-min/m3 (Ct unchanged with time)

LD50 (oral) = 0.7 mg/kg

Maximum safe Ct for skin and eyes are 5 and 2 mg-min/m3, respectively.

ACUTE PHYSIOLOGICAL ACTION OF HD IS CLASSIFIED AS LOCAL AND SYSTEMIC.

LOCAL ACTIONS: HD effects both the eyes and the skin. SKIN damage occurs after percutaneous absorption. Being lipid soluble, HD can be absorbed into all organs. Skin penetration is rapid without skin irritation. Swelling (blisters) and reddening (erythema) of the skin occurs after a latency period of 4-24 hours following the exposure, depending on degree of exposure and individual sensitivity. The skin healing process is very slow. Tender skin, mucous

membrane and perspiration-covered skin are more sensitive to the effects of HD. HD's effect on the skin, however, is less than on the eyes. Local action on the eyes produces severe necrotic damage and loss of eyesight Exposure of eyes to HD vapor or aerosol produces lacrimation, photophobia, and inflammation of the conjunctiva and cornea.

SYSTEMIC ACTIONS: Occurs primarily through inhalation and ingestion. The HD vapor or aerosol is less toxic to the skin or eyes than the liquid form. When inhaled, the upper respiratory tract (nose, throat, tracheae) is inflamed after a few hours latency period, accompanied by sneezing, coughing, and bronchitis, loss of appetite, diarrhea, fever, and apathy. Exposure to nearly lethal doses of HD can produce injury to bone marrow, lymph nodes, and spleen as showed by a drop in white blood cell count, thus resulting in increased susceptibility to local and systemic infections. Ingestion of HD will produce severe stomach pains, vomiting, and bloody stools after a 15-20 minute latency period.

CHRONIC EXPOSURE : HD can cause sensitization, chronic lung impairment, (cough, shortness of breath, chest pain), cancer of the mouth, throat, respiratory tract and skin, and leukemia. It may also cause birth defects.

EMERGENCY AND FIRST AID PROCEDURES:

INHALATION: Hold breath until respiratory protective mask is donned. Remove from the source IMMEDIATELY. If breathing is difficult, administer oxygen. If breathing has stopped, give artificial respiration. Mouth-to-mouth resuscitation should be used when approved mask-bag or oxygen delivery systems are not available. Do not use mouth-to-mouth resuscitation when facial contamination exits. Seek medical attention IMMEDIATELY.

EYE CONTACT: Speed in decontaminating the eyes is absolutely essential. Remove the person from the liquid source, flush the eyes immediately with water for at least 15 minutes by tilting the head to the side, pulling the eyelids apart with the fingers and pouring water slowly into the eyes. Do not cover eyes with bandages but, if necessary, protect eyes by means of dark or opaque goggles. Transfer the patient to a medical facility **IMMEDIATELY.**

SKIN CONTACT: Don respiratory protective mask. Remove the victim from agent sources immediately. Immediately wash skin and clothes with 5% solution of sodium hypochlorite or liquid household bleach within one minute. Cut and remove contaminated clothing, flush contaminated skin area again with 5% sodium hypochlorite solution, then wash contaminated skin area with soap and water. Seek medical attention **IMMEDIATELY.**

INGESTION: Do not induce vomiting. Give victim milk to drink. Seek medical attention **IMMEDIATELY.**

SECTION VI - REACTIVITY DATA

STABILITY: Stable at ambient temperatures. Decomposition temperature is 149 C to 177 C. Mustard is a persistent agent depending on pH and moisture, and has been known to remain active for up to three years in soil.

INCOMPATIBILITY: Rapidly corrosive to brass @ 65 C. Will corrode steel at a rate of .0001 in. of steel per month @ 65 C.

HAZARDOUS DECOMPOSITION: Mustard will hydrolyze to form HCl and thiodiglycol.

HAZARDOUS POLYMERIZATION: Does not occur.

SECTION VII - SPILL, LEAK, AND DISPOSAL PROCEDURES

STEPS TO BE TAKEN IN CASE MATERIAL IS RELEASED OR SPILLED: If spills or leaks occur, only personnel in full protective clothing will remain in the area **(See Section VIII)**. In case of personnel contamination **See Section V** for emergency and first aid instructions.

RECOMMENDED FIELD PROCEDURES: The HD should be contained using vermiculite, diatomaceous earth, clay or fine sand and neutralized as soon as possible using copious amounts of 5.25% sodium hypochlorite solution. Scoop up all material and clothing and place in a approved DOT container. Cover the contents of the container with decontaminating solution as above. The exterior of the container will be decontaminated and labeled according with EPA and DOT regulations. All leaking containers will be over packed with vermiculite placed between the interior and exterior containers. Decontaminate and label in accordance with EPA and DOT regulations. Dispose of the material in accordance with waste disposal methods provided below. Dispose of the decontaminate according to Federal, state and local regulations. Conduct general area monitoring with an approved monitor to confirm that the atmospheric concentrations do not exceed the airborne exposure limits **(See Sections II and VIII).**

If 5.25 % sodium hypochlorite solution is not available then the following decontaminants may be used instead and are listed in the order of preference: Calcium Hypochlorite, contamination Solution No. 2 (DS2), and Super Tropical Bleach Slurry (STB).

WARNING: Pure, undiluted calcium hypochlorite will burn on contact with liquid HD.

RECOMMENDED LABORATORY PROCEDURES: A minimum of 65 grams of decon solution per gram of HD is allowed to agitate for a minimum of one hour. Agitation is not necessary following the first hour if a single phase is obtained. At the end of 24 hours, the

resulting solution will be adjusted to a pH between 10 and 11. Test for presence of active chlorine by use of acidic potassium iodide solution to give free iodine color. Place 3 ml of the decontaminate in a test tube. Add several crystals of potassium iodine and swirl to dissolve. Add 3 ml of 50 wt.% sulfuric acid:water and swirl. IMMEDIATE iodine color shows the presence of active chlorine. If negative, add additional 5.25% sodium hypochlorite solution to the decontamination solution, wait two hours, then test again for active chlorine. Continue procedure until positive chlorine is given by solution. A 10 wt.% calcium hypochlorite (HTH) mixture may be substituted for sodium hypochlorite. Use 65 grams of decon per gram of HD and continue the test as described for sodium hypochlorite. Scoop up all material and clothing and place in a approved DOT container. Cover the contents of the container with decontaminating solution as above. The exterior of the container will be decontaminated and labeled according with EPA and DOT regulations. All leaking containers will be over packed with vermiculite placed between the interior and exterior containers. Decontaminate and label in accordance with EPA and DOT regulations. Dispose of the material in accordance with waste disposal methods provided below. Dispose of the decontaminate according to Federal, state and local regulations. Conduct general area monitoring with an approved monitor to confirm that the atmospheric concentrations do not exceed the airborne exposure limits **(See Section VIII).**

NOTE: Surfaces contaminated with HD, then rinse and decontaminated may evolve sufficient HD vapor to produce a physiological response. HD on laboratory glassware may be oxidized by its vigorous reaction with concentrated nitric acid.

WASTE DISPOSAL METHOD: Open pit burning or burying of HD or items containing or

contaminated with HD in any quantity is prohibited. Decontamination of waste or excess material will be accomplished according to the procedures outlined above can be destroyed by incineration in EPA approved incinerators according to appropriate provisions of Federal, State and local Resource Conservation Recovery Act (RCRA) regulations.

NOTE: Some states define decontaminated surety material as a RCRA hazardous waste.

SECTION VIII - SPECIAL PROTECTION INFORMATION

RESPIRATORY PROTECTION:

CONCENTRATION	RESPIRATORY PROTECTIVE EQUIPMENT.
< 0.003 mg/m3	A full face piece, chemical canister, air purifying protective mask will be on hand for escape. (The M9-, M17-, or M40-series masks are acceptable for this purpose. Other masks certified as equivalent may be used)
0.003 mg/m3	A NIOSH/MSHA approved pressure demand full face piece SCBA suitable for use in high agent concentrations with protective ensemble. (See DA PAM 385-61 for examples).

VENTILATION:

Local Exhaust: Mandatory. Must be filtered or scrubbed. Air emissions will meet local, state and federal regulations.

Special: Chemical laboratory hoods will have an average inward face velocity of 100 linear feet per minute (lfpm) +/- 10% with the velocity at any point not deviating from the average face velocity by more than 20%. Existing laboratory hoods will have an inward face velocity of 150 lfpm +/- 20%. Laboratory hoods will be located such that cross drafts do not exceed 20% of the inward face velocity. A visual performance test using smoke producing devices will be performed in assessing the ability of the hood to contain agent HD.

Other: Recirculation of exhaust air from agent areas is prohibited. No connection between agent area and other areas through the ventilation system are permitted. Emergency backup power is necessary. Hoods should be tested semiannually or after modification or maintenance operations. Operations should be performed 20 centimeters inside hoods.

PROTECTIVE GLOVES: Butyl Rubber Gloves M3 and M4 Norton, Chemical Protective Glove Set

EYE PROTECTION: As a minimum, chemical goggles will be worn. For splash hazards use goggles and face shield.

OTHER PROTECTIVE EQUIPMENT: For laboratory operations, wear lab coats, gloves and have mask readily accessible. In addition, daily clean smocks, foot covers, and head covers will be required when handling contaminated lab animals.

MONITORING: Available monitoring equipment for agent HD is the M8/M9 detector paper, blue band tube, M256/M256A1 kits, bubbler, Depot Area Air Monitoring System (DAMMS), Automated Continuous Air Monitoring System (ACAMS),CAM-M1, Hydrogen Flame Photometric Emission Detector (HYFED), the Miniature Chemical Agent Monitor (MINICAM), and Real Time Analytical Platform (RTAP).

Real-time, low-level monitors (with alarm) are required for HD operations. In their absence, an Immediately Dangerous to Life and Health (IDLH) atmosphere must be presumed. Laboratory operations conducted in appropriately maintained and alarmed engineering controls require only periodic low-level monitoring.

SECTION IX - SPECIAL PRECAUTIONS

PRECAUTIONS TO BE TAKEN IN HANDLING AND STORING: When handling agents, the buddy system will be incorporated. No smoking, eating, or drinking in areas containing agents is permitted. Containers should be periodically inspected for leaks, (either visually or using a detector kit). Stringent control over all personnel practices must be exercised. Decontaminating equipment will be conveniently placed. Exits must be designed to permit rapid evacuation. Chemical showers, eyewash stations, and personal cleanliness facilities must be provided. Wash hands before meals and shower thoroughly with special attention given to hair, face, neck, and hands using plenty of soap and water before leaving at the end of the work day .

OTHER PRECAUTIONS: HD should be stored in containers made of glass for Research, Development, Test and Evaluation (RDTE) quantities or one-ton steel containers for large quantities. Agent will be double-contained in liquid and vapor tight containers when in storage.

For additional information see "AR 385-61, The Army Toxic Chemical Agent Safety Program," "DA PAM 385-61, Toxic Chemical Agent Safety Standards," and "AR 40-173, Occupational Health Guidelines for the Evaluation and Control of Occupational Exposure to HD Agents H, HD, and HT."

SECTION X - TRANSPORTATION DATA

FORBIDDEN FOR TRANSPORT OTHER THAN VIA MILITARY (TECHNICAL ESCORT UNIT) TRANSPORT ACCORDING TO 49 CFR 172

PROPER SHIPPING NAME: Poisonous liquids, n.o.s.

DOT HAZARD CLASS: 6.1, Packing Group I, Hazard Zone B

DOT LABEL: Poison

DOT MARKING: Poisonous liquids, n.o.s. Bis-(2-chloroethyl) sulfide UN 2810, Inhalation Hazard

DOT PLACARD: POISON

EMERGENCY ACCIDENT PRECAUTIONS AND PROCEDURES: **See Sections IV, VII and VIII.**

PRECAUTIONS TO BE TAKEN IN TRANSPORTATION: Motor vehicles will be placarded regardless of quantity. Drivers shall be given full information regarding shipment and conditions in case of an emergency. AR 50-6 deals specifically with the shipment of chemical agents. Shipment of agents will be escorted in accordance with AR 740-32.

While the Edgewood Research Development, and Engineering Center, Department of the Army believes that the data contained herein are actual and the opinions expressed are those of the experts regarding the results of the tests conducted, the data are not to be taken as a warranty or representation for which the Department of the Army or Edgewood Research Development, and Engineering Center assume legal responsibility. They are offered solely for your consideration, investigation, and verification. Any use of these data and information must be determined by the user to be in accordance with applicable Federal, State, and local laws and regulations.

ADDENDUM A
ADDITIONAL INFORMATION FOR THICKENED HD

TRADE NAME AND SYNONYMS: Thickened HD, THD

HAZARDOUS INGREDIENTS: K125 (acryloid copolymer, 5%) is used to thicken HD. K125 is not known to be hazardous except in a finely-divided, powder form.

PHYSICAL DATA: Essentially the same as HD except for viscosity. The viscosity of HD is between 1000 and 1200 centistoke @ 25 C.

FIRE AND EXPLOSION DATA: Same as HD.

HEALTH HAZARD DATA: Same as HD except for skin contact. For skin contact, don respiratory protective mask and remove contaminated clothing IMMEDIATELY. IMMEDIATELY scrape the HD from the skin surface, then wash the contaminated surface with acetone. Seek medical attention IMMEDIATELY.

SPILL, LEAK, AND DISPOSAL PROCEDURES: If spills or leaks of HD occur, follow the same procedures as those for HD, but dissolve THD in acetone before introducing any decontaminating solution. Containment of THD is generally not necessary. Spilled THD can be carefully scraped off the contaminated surface and placed in a fully removable head drum with a high density, polyethylene lining. THD can then be decontaminated, after it has been dissolved in acetone, using the same procedures used for HD. Contaminated surfaces should be treated with acetone, then decontaminated using the same procedures as those used for HD.

NOTE: Surfaces contaminated with THD or HD and then rinse-decontaminated may evolve sufficient HD vapor to produce a physiological response.

SPECIAL PROTECTION INFORMATION: Same as HD.

SPECIAL PRECAUTIONS: Same as HD with the following addition. Handling THD requires careful observation of the "stringers" (elastic, threadlike attachments) formed when the agents are transferred or dispensed. These stringers must be broken cleanly before moving the contaminating device or dispensing device to another location, or unwanted contamination of a working surface will result.

TRANSPORTATION DATA: Same as HD.

MATERIAL SAFETY DATA SHEET

LEWISITE

SECTION I - GENERAL INFORMATION

DATE: 16 April 1988
REVISED: 27 March 1996

MANUFACTURER'S ADDRESS:

U.S. ARMY CHEMICAL BIOLOGICAL DEFENSE COMMAND EDGEWOOD RESEARCH DEVELOPMENT, AND ENGINEERING CENTER (ERDEC)
ATTN: SCBRD-ODR-S
ABERDEEN PROVING GROUND, MD 20101-5423

Emergency telephone #' s: 0700-1630 EST: 410-671-4411/4
After: 1630 EST: 410- 278-5201, Ask for Staff Duty Officer

CAS REGISTRY NUMBER: 541-25-3

CHEMICAL NAME:

Dichloro-(2-chlorovinyl) arsine

TRADE NAME AND SYNONYMS:

Arsine, (2-chlorovinyl) dichloro-
Arsonous dichloride, (2-chloroethenyl)
Chlorovinylarsine dichloride
2-Chlorovinyldichloroarsine
Beta-Chlorovinyldichloroarsine
Lewisite
L
EA 1034

CHEMICAL FAMILY: Arsenical (vesicant)

FORMULA/CHEMICAL STRUCTURE: C2H2AsC13

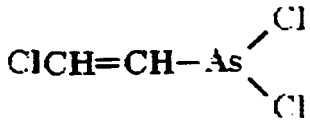

NFPA 704 HAZARD SIGNAL:

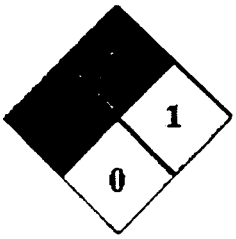

Health - 4
Flammability - 1
Reactivity - 1
Special - 0

SECTION II - HAZARDOUS INGREDIENTS

INGREDIENTS NAME	FORMULA	PERCENTAGE BY WEIGHT	AIRBORNE EXPOSURE LIMIT (AEL)
Lewisite	C2H2AsCl3	100	* 0.003 mg/m3

* This is a ceiling value

SECTION III - PHYSICAL DATA

BOILING POINT: 374 F 190 C

VAPOR PRESSURE (mm Hg):

0.35 @ 25 C
0.394 @ 20 C

VAPOR DENSITY (AIR=1): 7.1

SOLUBILITY: Insoluble in water and dilute mineral acids. Soluble in organic solvents, oils. and alcohol.

SPECIFIC GRAVITY (H2O=1): 1.88 @ 25 C

FREEZING POINT: 18 C to 0.1 C depending on purity

VOLATILITY: 4,480 mg/m3 @ 20 C

MOLECULAR WEIGHT: 207.32

LIQUID DENSITY: 1.89 at 20 C (Much heavier than Mustard)

APPEARANCE AND ODOR: Pure L is a colorless oily liquid. "War gas" is an amber to dark brown liquid. A characteristic odor is usually geranium-like; very little odor when pure.

SECTION IV - FIRE AND EXPLOSION DATA

FLASHPOINT (Method Used): Does not flash

FLAMMABILITY LIMITS: N/A.

EXTINGUISHING MEDIA: Water, fog, foam, CO_2. Avoid use of extinguishing methods that will cause splashing or spreading of L.

SPECIAL FIRE FIGHTING PROCEDURES: All persons not engaged in extinguishing the fire should be evacuated immediately. Fires involving L should be contained to prevent contamination of uncontrolled areas. When responding to a fire alarm in buildings or areas containing agents, firefighting personnel should wear full firefighter protective clothing (Without Tap Clothing) during chemical agent firefighting and fire rescue operations. Respiratory protection is required. Positive pressure, full face piece, NIOSH approved self-contained breathing apparatus (SCBA) will be worn where there is danger of oxygen deficiency and when directed by the fire chief or chemical accident/incident (CAI)operations officer. In cases where firefighters are responding to a chemical accident/incident for rescue/reconnaissance purposes, they will wear appropriate levels of protective clothing **(See Section VIII).**

Do not breathe fumes. Skin contact with agents must be avoided always. Although the fire may destroy most of the agent, care must still be taken to assure the agent or contaminated liquids do not further contaminate other areas or sewers. Contact with the agent liquid or vapor can be fatal.

SECTION V - HEALTH HAZARD DATA

AIRBORNE EXPOSURE LIMITS (AEL): The permissible airborne exposure concentration of L for an 8-hour workday or a 40-hour work week is an 8-hour time weighted average (TWA) of 0.003 mg/m3 as a ceiling value. A ceiling value may not be exceeded anytime. The ceiling value for Lewisite is based upon the present technologically feasible detection limits of 0.003 mg/m3. This value can be found in "DA Pam 40-173, Occupational Health Guidelines for the Evaluation and Control of Occupational Exposure to Mustard H, HD, HT, and L." To date, however, the Occupational Safety and Health Administration (OSHA) has not promulgated permissible exposure concentration for L.

EFFECTS OF OVEREXPOSURE: L is a vesicant (blister agent), also, it acts as a systemic poison, causing pulmonary edema, diarrhea, restlessness, weakness, subnormal temperature, and low blood pressure. In order of severity and appearance of symptoms, it is: a blister agent, a toxic lung irritant, absorbed in tissues, and a systemic poison. When inhaled in high concentrations, may be fatal in as short a time as 10 minutes. L is not detoxified by the body. Common routes of entry into the body include ocular, percutaneous, and inhalation.

TOXICOLOGICAL DATA:

Man:

LCt50 (inhalation, man) = 1200 - 1500 mg min/m3
LCt50 (skin vapor exposure, man) = 100,000 mg min/m3 LDLO (skin, human) = 20 mg/kg
LCt50 (skin, man): 1500 mg/min3. L irritates eyes and skin and gives
warning of its presence. Minimum effective dose (ED min) = 200 mg/m3 (30 min).
ICt50 (eyes, man): < 300 mg min/m3.

Animal:

LD50 (oral, rat) = 50 mg/kg
LD50 (subcutaneous, rat) = 1 mg/kg
LCtLO (inhalation, mouse) = 150 mg/m3 10m
LD50 (skin, dog = 15 mg/kg RTECS) or 38 mg/kg (ERDEC chemical agent data sheets)
LD50 (skin, rabbit) = 6 mg/kg
LD50 (subcutaneous, rabbit) = 2 mg/kg
LD50 (intravenous, rabbit) = 500 mg/kg
LD50 (skin, guineapig) = 12 mg/kg
LD50 (subcutaneous, guinea pig) = 1 mg/kg
LD50 (skin, domestic farm animals) = 15 mg/kg
LCt50 (inhalation, rat) = 1500 mg min/m3 (9 min)
LCt50 (vapor skin, rat) = 20,000 mg min m 25 min)
LCD50 (skin, rat) = 15 - 24 mg/kg
LD50 (ip, dog) = 2 mg/kg
EDmin (skin, dog) = 50 mg/m3 (30 min)
EDmin (eye, dog) = 20 mg/m3 (30 min)
EDmin (skin, rabbit) = 25 mg/m3 (30 min)
EDmin (eye, rabbit) = 1 mg/m3 (30 min)

ACUTE EXPOSURE:

EYES: Severe damage. Instant pain, conjunctivitis and blepharospasm leading to closure of eyelids, followed by corneal scarring and iritis. Mild exposure produces reversible eye damage if decontaminated instantly. More permanent injury or blindness is possible within one minute of exposure.

SKIN: Immediate stinging pain increasing in severity with time. Erythema (skin reddening) appears within 30 minutes after exposure accompanied by pain with itching and irritation for 24 hours. Blisters appear within 12 hours after exposure with more pain that diminished after 2-3 days. Skin burns are much deeper than with HD. Tender skin, mucous membrane, and

perspiration covered skin are more sensitive to the effects of lewisite. This, however, is counteracted by L's hydrolysis by moisture, producing less vesicant, higher vapor pressure product.

RESPIRATORY TRACT: Irritating to nasal passages and produces a burning sensation followed by profuse nasal secretion and violent sneezing. Prolonged exposure causes coughing and production of large quantities of froth mucus. In experimental animals, injury to respiratory tracts, due to vapor exposure is similar to mustard's; however, edema of the lung is more marked and frequently accompanied by pleural fluid.

SYSTEMIC EFFECTS: L on the skin, and inhaled vapor may cause systemic poisoning. A manifestation of this is a change in capillary permeability, which permit's loss of sufficient fluid from the bloodstream to cause hemoconcentration, shock and death. In nonfatal cases, hemolysis of erythrocytes has occurred with a resultant hemolytic anemia. The excretion of oxidized products into the bile by the liver produces focal necrosis of that organ, necrosis of the mucosa of the biliary passages with periobiliary hemorrhages, and some injury to the intestinal mucosa. Acute systematic poisoning from large skin burns cause's pulmonary edema, diarrhea, restlessness, weakness, subnormal temperature, and low blood pressure in animals.

CHRONIC EXPOSURE: Lewisite can cause sensitization and chronic lung impairment. Also, by comparison to agent mustard and arsenical compounds, it can be considered as a suspected human carcinogen.

EMERGENCY AND FIRST AID PROCEDURES:

INHALATION: Hold breath until respiratory protective mask is donned. Remove from the source IMMEDIATELY. If breathing has stopped give artificial respiration. Mouth-to-mouth resuscitation should be used when approved maskbag or oxygen system are not available. Do not use mouth-to-mouth resuscitation when facial contamination exists. Seek medical attention IMMEDIATELY.

EYE CONTACT: Speed in decontaminating the eyes is essential. Remove the person from the liquid source, flush the eyes immediately with water for at least 15 minutes tilting the head to the side, pulling eyelids apart with fingers and pouring water slowly into the eyes. Do not cover eyes with bandages, if necessary, protect eyes by means of dark or opaque goggles. Seek medical attention IMMEDIATELY.

SKIN CONTACT: Remove the victim from the source immediately and remove contaminated clothing. Immediately decon affected areas by flushing with 10% sodium carbonate solution or liquid household bleach within one minute. After 3-4 minutes, wash off with soap and water to protect against erythema. Seek medical attention IMMEDIATELY.

INGESTION: Do not induce vomiting. Give victim milk to drink. Seek medical attention IMMEDIATELY.

SECTION VI - REACTIVITY DATA

STABILITY: Stable in steel or glass containers.

INCOMPATIBILITY: Corrosive to steel at a rate of 1 x 10 -5 to 5 x 10-5 in/month at 65 C.

HAZARDOUS DECOMPOSITION PRODUCTS: Reasonably stable; however, in presence of moisture, it hydrolyses rapidly, losing its vesicant property. It also hydrolyses in acidic medium to form HC1 and non-volatile (solid) chlorovinylarsenious oxide, which is less vesicant than Lewisite. Hydrolysis in alkaline medium, as in decontamination with alcoholic caustic or carbonate solution or Decontaminating Agent, DS(DS2), produces acetylene and trisodium arsenate (Na3AS04). Therefore, decontaminated solution would contain toxic arsenic.

SECTION VII - SPILL, LEAK, AND DISPOSAL PROCEDURES

STEPS TO BE TAKEN IN CASE MATERIAL IS RELEASED OR SPILLED: Only personnel in full protective clothing (See Section VIII) will be allowed in area where L is spilled. See Section V for emergency and first aid procedures.

RECOMMENDED FIELD PROCEDURES: The L should be contained using vermiculite, diatomaceous earth, clay, or fine sand and neutralized as soon as possible using copious amounts of alcoholic caustic, carbonate, or DS2. Caution must be exercised when using these decontaminates since acetylene will be given off. Household bleach can also be used if accompanied by stirring to allow contact. Scoop up all contaminated material and clothing and place in approved DOT containers. Cover with additional decontaminant. Decontaminate the outside of the container and label according to DOT and EPA requirements. All leaking containers will be over packed with vermiculite placed between interior and exterior containers. Decontaminate and lable according to EPA and DOT regulations. Dispose of as specified below. Dispose of decontaminate according to Federal, State, and local regulations. Conduct general area monitoring with an approved monitor to confirm that the atmospheric concentrations do not exceed the airborne exposure limit (See Sections II and VIII).

RECOMMENDED LABORATORY PROCEDURES: A 10 wt. % alcoholic sodium hydroxide solution is prepared by adding 100 grams of denatured ethanol to 900 grams of 10 wt.% NaOH in water. A minimum of 200 grams of decon is required for each gram of L. The decon/agent solution is agitated for a minimum of one hour. At the end of one hour the resulting pH should be checked and adjusted to above 11.5 using additional NaOH, if required. It is permitted to substitute 10 wt.% alcoholic sodium carbonate made and used in the same ratio as the NaOH listed above. Reaction time should be increased to 3-hours with agitation for the first hour. Final pH should be adjusted to above 10. It is permitted to substitute 5.25% sodium hypochlorite for the 10% alcoholic sodium hydroxide solution above. Allow one hour with agitation for the reaction. Adjustment of the pH is not required. Scoop up all contaminated material and place in an approved DOT container. Cover with additional decontaminant. Decontaminate the outside of the container and label according to DOT and EPA requirements. All leaking containers will be over packed with vermiculite placed between the interior and exterior containers. Decontaminate

and label according to EPA and DOT regulations. Dispose of as specified below. Dispose of the decontaminate according to Federal, state, and local regulations. Conduct general area monitoring to confirm that the atmospheric concentrations do not exceed the airborne exposure limit (See Section VIII).

WASTE DISPOSAL METHOD: All neutralized material should be collected and contained for disposal according to land ban RCRA regulations or thermally decomposed in an EPA permitted incinerator equipped with a scrubber that will scrub out the chlorides and equipped with an electrostatic precipitator or other filter device to remove arsenic. Collect all the arsenic dust from the electrostatic precipitator or other filter device and containerize and label according to DOT and EPA regulations. The arsenic will be disposed of according to land ban RCRA regulations. Any contaminated materials or protective clothing should be decontaminated using alcoholic caustic, carbonates, or bleach analyzed to assure it is free of detectable contamination (3X) level. The clothing should then be sealed in plastic bags inside properly labeled drums and held for shipment back to the DA issue point.

NOTE: Some states define decontaminated surety material as an RCRA hazardous waste.

SECTION VIII - SPECIAL PROTECTION INFORMATION

RESPIRATORY PROTECTION:

CONCENTRATION	RESPIRATORY PROTECTIVE EQUIPMENT.
< 0.003 mg/m3	A full face piece, chemical canister, air purifying protective mask will be on hand for escape. (The M9-, M17-, or M40-series masks are acceptable for this purpose. Other masks certified as equivalent may be used)
0.003 mg/m3 or unknown	A NIOSH/MSHA approved, full face piece SCBA suitable for use in high agent concentrations with a protective ensemble. (See DA Pam 385-61)

VENTILATION

Local exhaust: Mandatory. Must be filtered or scrubbed to limit exit concentration to non-detectable level. Air emissions will meet local, state and federal regulations.

Special: Chemical laboratory hoods will have an average inward face velocity of 100 linear feet per minute (1fpm) +/- 10% with the velocity at any point not deviating from the average face velocity by more than 20%. Existing laboratory hoods will have an inward face velocity of 150 lfpm +/- 20%. Laboratory hoods will be located such that cross drafts do not exceed 20% of the inward face velocity. A visual performance test utilizing smoke producing devices will be performed in the assessment of the inclosure's ability to contain Lewisite.

Other: Recirculation of exhaust air from agent areas is prohibited. No connection between agent

area and other areas through the ventilation system is permitted. Emergency backup power is necessary. Hoods should be tested semiannually or after modification or maintenance operations. Operations should be performed 20 centimeters inside hoods. Procedures should be developed for disposal of contaminated filters.

PROTECTIVE GLOVES: Norton, Chemical Protective Glove Set, Butyl Rubber Gloves M3 and M4

EYE PROTECTION: As a minimum, chemical goggles will be worn. For splash hazard use goggles and face-shield.

OTHER PROTECTIVE EQUIPMENT: For laboratory operations, wear lab coats, gloves and have a mask readily accessible. In addition, daily clean smocks, foot covers, and head covers will be required when handling contaminated lab animals.

MONITORING: Available monitoring equipment for agent L is the M18A2 (yellow band), bubblers (arsenic and GC method), and M256 & A1 Kits.

Real-time, low-level monitors (with alarm) are required for L operations. In their absence, an Immediately Dangerous to Life and Health (IDLH) atmosphere must be presumed. Laboratory operations conducted in appropriately maintained and alarmed engineering controls require only periodic low-level monitoring.

SECTION IX - SPECIAL PRECAUTIONS

PRECAUTIONS TO BE TAKEN IN HANDLING AND STORING: When handling agents, the buddy system will be incorporated. No smoking, eating, or drinking in areas containing agents is permitted. Containers should be periodically inspected for leaks, either visually or using a detector kit. Stringent control over all personnel handling L must be exercised. Decontaminating equipment will be conveniently placed. Exits must be designed to permit rapid evacuation. Chemical showers, eye wash stations, and personal cleanliness facilities must be provided. Wash hands before meals and shower thoroughly with special attention given to hair, face, neck, and hands, using plenty of soap before leaving at the end of the workday.

OTHER PRECAUTIONS: L should be stored in containers made of glass for Research, DevelopmentTest and Evaluation (RDTE) quantities or one-ton steel containers for large quantities. Agent will be double contained in liquid and vapor tight containers when in storage or during transportation.

For additional information see "AR 385-61, The Army Toxic Chemical Agent Safety Program," "DA Pam 385-61, Toxic Chemical Agent Safety Standards," and "DA Pam 40-173, Occupational Health Guidelines for the Evaluation and Control of Occupational Exposure to Mustard H, HD, HT, and L."

SECTION X - TRANSPORTATION DATA

PROPER SHIPPING NAME: Poisonous liquids, n.o.s.

DOT HAZARDS CLASSIFICATION: 6.1, Packing Group I

DOT LABEL: Poison

DOT MARKING: Poisonous liquids, n.o.s. Dichloro-(2-chlorovinyl)arsine UN 2810

DOT PLACARD: POISON

EMERGENCY ACCIDENT PRECAUTIONS & PROCEDURES: See Sections IV, VII and VIII.

PRECAUTIONS TO BE TAKEN IN TRANSPORTATION: Motor vehicles will be placarded regardless of quantity. Drivers will be given full information regarding shipment and conditions in case of an emergency. AR 50-6 deals specifically with the shipment of chemical agents. Shipment of agents will be escorted according to AR 740-32.

While the Edgewood Research Development, and Engineering Center, Department of the Army believes that the data contained herein are factual and the opinions expressed are those of the experts regarding the results of the tests conducted, the data are not to be taken as a warranty or representation for which the Department of the Army or Edgewood Research Development, and Engineering Center assumes legal responsibility. They are offered solely for your consideration, investigation, and verification. Any use of these data and information must be determined by the user to be according to applicable Federal, State, and local laws and regulations.

DATE: January 12, 1990

US ARMY CHEMICAL
RESEARCH, DEVELOPMENT
AND ENGINEERING CENTER

Emergency Telephone #s:
CRDEC Safety Office
301-671-4411, 0800-1630
EST. After normal duty
hours: 301-278-5201
Ask for CRDEC Staff
Duty Officer

HN1 MATERIAL SAFETY DATA SHEET

SECTION I - GENERAL INFORMATION

MANUFACTURER'S NAME: Department of the Army

MANUFACTURER'S ADDRESS: US ARMY ARMAMENT, MUNITIONS AND CHEMICAL COMMAND
CHEMICAL RESEARCH, DEVELOPMENT AND ENGINEERING CENTER
ATTN: SMCCR-SFS
ABERDEEN PROVING GROUND, MD 21010-5423

CAS REGISTRY NUMBER: 538-07-8

CHEMICAL NAME: 2,2'-Dichlorotriethylamine

Alternate Chemical Names:

Ethylbis(beta-chloroethyl)amine
Ethylbis(2-chloroethyl)amine
2-Chloro-N-(2-chloroethyl)-N-ethylethanamine

TRADE NAME AND SYNONYMS: Ethyl-S
HN1
TL 329
TL 1149

CHEMICAL FAMILY: Chloroamino hydrocarbon

FORMULA/CHEMICAL STRUCTURE: (Cl CH2 CH2)2 NC2 H5

NFPA 704 SIGNAL: Health - 4
Flammability - 1
Reactivity - 1

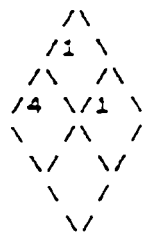

SECTION II - COMPOSITION

INGREDIENTS NAME	FORMULA	PERCENTAGE BY WEIGHT	TLV
Nitrogen Mustard 1	(C1 CH2 CH2)2 N C2 H5	100%	*

*None established/available

SECTION III - PHYSICAL DATA

BOILING POINT DEG F (DEG C): 150.8 (66) at 3 torr
185.9 (88.5) at 12 torr
381.2 (194) at 760 torr (Calculated)
Decomposes before boiling at 760 torr.

VAPOR PRESSURE (mm Hg): 0.0773 at 10 DEG C
0.25 at 25 DEG C
0.744 at 40 DEG C

VAPOR DENSITY (AIR=1): 5.9

LIQUID DENSITY (g/cc): 1.09 at 25 DED C (77 DEG F)

SOLUBILITY IN WATER: Miscible with many organic solvents and oils.
Very slightly soluble in water.

SPECIFIC GRAVITY (H2O=1): 1.0861 at 23 DEG C
1.09 at 25 DEG C

FREEZING (MELTING) POINT: -34 DEG C

AUTOIGNITION TEMPERATURE DEG F (DEG C): Data not available

VISCOSITY (CENTISTOKES): Data not available

VOLATILITY: 127 mg/m3 at -10 DEG C
308 mg/m3 at 0 DEG C
744 mg/m3 at 10 DEG C
1520 mg/m3 at 20 DEG C
2290 mg/m3 at 25 DEG C
3100 mg/m3 at 30 DEG C
6290 mg/m3 at 40 DEG C

EVAPORATION RATE: Data not available

APPEARANCE AND ODOR: Pale amber to yellow oily liquid
Faint "fishy or musty" odor

SECTION IV - FIRE AND EXPLOSION DATA

FLASH POINT: No immediate danger of fire or explosion

FLAMMABILITY LIMITS (% BY VOLUME): Data not available

EXTINGUISHING MEDIA: Water, fog, foam, CO_2. Avoid use of extinguishing methods that will splash or spread HN1.

UNUSUAL FIRE AND EXPLOSION HAZARDS: Vapors of unburned agent will exhibit toxic effects.

SPECIAL FIRE FIGHTING PROCEDURES: Full protective clothing (see Section VIII) and full respiratory protection must be worn when fighting fires inside buildings and areas where HN1 is stored. Full protective clothing and canister or filter type masks can be worn where oxygen deficiency is not a problem. All persons not engaged in extinguishing the fire should be evacuated. Skin contact and inhalation of HN1 and its vapors must be avoided at all times. Although the fire may destroy most of the HN1, care must be taken to assure that the HN1 does not contaminate uncontrolled areas and that the fire fighters are adequately protected from physical contact with the agent and agent fumes. Contact may be fatal.

SECTION V - HEALTH HAZARD DATA

RECOMMENDED EXPOSURE LIMITS (REL): An REL is not available for HN1. No individual should be exposed to any direct skin or eye contact or any detectable airborne concentrations. Nitrogen mustards are classified as carcinogens by the International Agency for Research on Cancer (IARC).

EFFECTS OF OVEREXPOSURE: The vapors are irritating to the eyes and nasal membranes even in low concentration. HN1 is a vesicant (causing blisters) and alkylating agent producing cytotoxic action on the hematopoietic (blood-forming) tissues. HN1 is not naturally detoxified by the body, therefore repeated exposure produces a cumulative effect.

Median lethal dosages of HN1 in man are the following:

LCt50 (man, inhalation) = 1500 mg-min/m^3

LCt50 (man, percutaneous vapor) = 20,000 mg-min/m^3

Median incapacitating dosages of HN1 in man are the following:

ICt50 (man, eye contact) = 200 mg-min/m^3

ICt50 (man, percutaneous) = 9000 mg-min/m^3

Vesicancy doses in man are the following:
Liquid:

43.6 microliters produced 28 percent erythema
218 microliters produced 72 percent erythema
218 microliters produced 20 percent blisters (4 mm. av. diameter.)

ACUTE PHYSIOLOGICAL ACTION OF HN1 IS LOCAL AND SYSTEMIC.

Locally, HN1 affects both the eyes and the skin. Skin damage occurs after percutaneous resorption. Skin penetration is rapid and skin irritation is noted very shortly after contact with the agent. Reddening (erythema) of the skin may occur within 30 minutes to 1 hour following the exposure, depending on degree of exposure and individual sensitivity. Blistering may not occur for more than 12 hours following exposure. Tender skin, mucous membrane and perspiration covered skin are more sensitive to the effects of HN1. Local action on the eyes is extremely rapid, and produces severe neurotic damage and loss of eyesight. Exposure of eyes to HN1 vapor or aerosol produces lacrimation, photophobia, and inflammation of the conjunctiva and cornea. Greatest immediate effect on HN-1 is on the eyes.

Systemic actions occur primarily through inhalation and ingestion. When inhaled, the lesions caused by nitrogen mustards are similar to those caused by mustards. They decrease in severity down the respiratory tract from the point of entry. The upper respiratory tract (nose, throat, trachea) is inflamed after a few hours latency period, accompanied by sneezing, coughing, hoarseness progressing to loss of voice, and persistent cough. Fever and moist rails develop followed by loss of appetite, diarrhea, and apathy. Broncho pneumonia may appear after the first twenty four hours. Exposure to near lethal doses of HN1 can produce injury to bone marrow, lymph nodes, and spleen as indicated by a drop in WBC count, and results in increased susceptibility to local and systemic infections. Ingestion of HN1 will produce severe stomach pains, vomiting, and bloody stools.

Chronic exposure to HN1 can cause sensitization and chronic lung impairment (cough, shortness of breath, chest pain). In mild vapor exposures there may be no skin lesions. After severe exposure or after exposure to liquid nitrogen mustard, reddening may appear earlier than in mustard contamination. There may be irritation and itching as with mustard; blisters may appear later. However, blisters may not occur for more than 12 hours following exposure. Skin lesions are similar to those caused by mustard.

EMERGENCY AND FIRST AID PROCEDURES:

Inhalation: Remove from the source immediately. If breathing has stopped, give artificial respiration. If breathing

is difficult, administer oxygen. Seek medical attention immediately.

Eye Contact: immediately flush eyes with water for 10-15 minutes, pulling eyelids apart with fingers and pouring water into eyes. Do not cover eyes with bandages. After flushing eyes with water, protect eyes with dark or opaque goggles. Seek medical attention immediately.

Skin Contact: Don respiratory protective mask and gloves; remove victim from source immediately and remove contaminated clothing. immediately decontaminate skin by flushing with a 5% solution of liquid household bleach. After 3-4 minutes, wash off with soap and water to remove decon agent and protect against erythema. Seek medical attention immediately.

The rate of absorption of liquid nitrogen mustards through the skin is slower than that of mustard. Therefore, to prevent systemic toxicity, decontamination should be done as late as 2 or 3 hours after exposure even if it increases the severity of the local reaction. Further cleansing may be done with soap and water.

Ingestion: Do not induce vomiting. Give victim milk to drink. Seek medical attention immediately.

SECTION VI - REACTIVITY DATA

STABILITY: Polymerizes slowly

RATE OF HYDROLYSIS: Slow

HYDROLYSIS PRODUCTS: Hydroxyl derivatives and condensation products.

INCOMPATIBILITY: Corrosive to ferrous alloys beginning at 65 DEG C (149 DEG F)

HAZARDOUS DECOMPOSITION: Toxic intermediate products are produced during hydrolysis. Approximate half-life in water at 25 DEG C in 1.3 minutes. Decomposition comes through slow change into quaternary ammonium salts. Decomposition point is below 194 DEG C (381.2 DEG F)

HAZARDOUS POLYMERIZATION: Slowly

SECTION VII - SPILL, LEAK, AND DISPOSAL PROCEDURES

STEPS TO BE TAKEN IN CASE MATERIAL IS RELEASED OR SPILLED: Only personnel in full protective clothing will be allowed in an area where HN1 is spilled. HN1 should be contained using vermiculite,

diatomaceous earth, clay or fine sand and neutralized as soon as possible. A minimum of 65 grams of decon solution (5.25% Sodium Hypochloritite solution) is required for each gram of HN1. HN1 must be added to the decon solution and NOT DECON SOLUTION TO HN1. Decontamination/agent solution is allowed to agitate for a minimum of one hour. Agitation is not necessary following the first hour if a single phase is obtained. At the end of 24 hours, the resulting solution shall be adjusted to a pH between 10 to 11. Test for presence of active chlorine by use of acidic potassium iodide solution to give free iodine color. Place 3 ml of the decontaminate in a test tube. Add several crystals of potassium iodine and swirl to dissolve. Add 3 ml of 50 wt% sulfuric acid:water and swirl. IMMEDIATE iodine color indicates the presence of active chlorine. If negative, add additional 5.25% sodium hypochlorite solution to the decontamination solution, wait two hours, then test again for active chlorine. Continue procedure until positive chlorine is given by solution.

A 10 wt % HTH mixture may be substituted for sodium hypochlorite. Use 65 grams of decon per gram of HN1 and continue the test as described for sodium hypochlorite.

Do not use dry STB or HTH as they react violently with some chemicals. Scoop up all contaminated material and place in approved DOT containers. Pour in STB slurry or HTH solution. Decontaminate the outside of containers and label in accordance with federal, state and local regulations and hold for disposal.

NOTE: Surfaces contaminated with HN1 and then rinsed with water may evolve sufficient HN1 vapor to produce a physiological response.

WASTE DISPOSAL METHOD: All decontaminated material should be collected, contained, and chemically decontaminated, then thermally decomposed in an approved incinerator for HN1, which will filter or scrub toxic by-products from effluent air before discharge to the atmosphere. Any contaminated protective clothing should be decontaminated using HTH or bleach and analyzed to assure it is free of detectable contamination. The clothing should then be sealed in plastic bags inside properly labeled drums and held for shipment back to the Department of Army issue point. Decontamination of waste or excess material shall be accomplished in accordance with the following procedure:

(a) HN1 on laboratory glassware may be oxidized reacting it with strong bleaches, alkalies, or other oxidizers.

(b) Chemical decontamination of HN1 should be accomplished as described above. HN1 has poor solubility in water.

Decontaminated waste and/or HN1 shall be transported according to local SOP (in accordance with AR 55-355). Final disposition will be controlled according to AMCR 385-131 and APG 200-2 and RCRA state regulations which take precedence (NOTE: Some states

consider certain decontaminated surety agents as RCRA hazardous waste. Local regulations must be considered before disposal action is taken).

SECTION VIII - SPECIAL PROTECTION INFORMATION

(U)RESPIRATORY PROTECTION:

HN1 Concentration	Respiratory Protective Equipment
Less than or equal to 0.003 mg/m3 as an 8-hr TWA	Protective mask not required provided that: (a) Continous real-time monitoring (with alarm capability) is conducted in the work area at the 0.003 mg/m3 level of detection. (b) M9, M17 or M40 mask is available and donned if concentrations exceed 0.003 mg/m3. (c) Exposure has been limited to the extent practicable by engineering control (remote operations, ventilations, and process isolation) or work practices. If those conditions are not met then the following applies: Full facepiece, chemical canister, air-purifying respirators. (The M9, M17 or M40 series or other certified equivalent masks acceptable for this purpose in conjunction with the M3 toxicological agent protective (TAP) suit for dermal protection.)
Greater than 0.003 as an 8-hr TWA	The Demilitarization Protective Ensemble (DPE), 30 mil, may be used with prior approval from the AMC Field Safety Activity Use time for the 30 mil DPE must be restricted to two hours or less. NOTE: When 30 mil DPE is not available the M17 or M40 mask with Level A protective ensemble including impregnated innerwear can be used. However, use time shall be restricted to the extent operationally feasible. and may not exceed one hour.

As an additional precaution, the cuffs of the sleeves and the legs of the M3 suit shall be taped to the gloves and boots to reduce aspiration.

VENTILATION: Local Exhaust: Mandatory must be filtered or scrubbed to limit exit concentration to 0.003 mg/m3 averaged over 8 hr/day. Filtration must be adequate to maintain stack concentration below 0.03 mg/m3 as a 1 hour TWA. These values are based on structural similarity to HD.

SPECIAL: Chemical laboratory hoods shall have an average inward face velocity of 100 linear feet per minute (lfpm) plus or minus 10% with the velocity at any point not deviating from the average face velocity by more than 20%. Laboratory hoods shall be located such that cross drafts do not exceed 20 percent of the inward face velocity. A visual performance test utilizing smoke producing devices shall be performed in the assessment of the inclosure's ability to contain agent HN1.

Other: Recirculation of exhaust air from agent areas is prohibited. No connection between agent areas and other areas through ventilation system is permitted. Emergency backup power is necessary. Hoods should be tested semi-annually or after modification or maintenance operations. Operations should be performed 20 cm inside hoods.

PROTECTIVE GLOVES: MANDATORY - Butyl Toxicological Agent Protective Gloves (M3,M4, or glove set).

EYE PROTECTION: As a minimum, chemical goggles will be worn. For splash hazard use goggles and face-shield.

OTHER PROTECTIVE EQUIPMENT: Full protective clothing will consist of the M3 butyl rubber suit with hood, M2A1 boots, M3 gloves, underwear, M9 series mask and coveralls (if desired), STEPOI or the DPE. For general lab work, gloves and lab coat shall be worn with M9, M17, or M40 Mask readily available.

In addition, when handling contaminated lab animals wearing clean smock, foot covers, and head covers are required daily.

SECTION IX - SPECIAL PRECAUTIONS

PRECAUTIONS TO BE TAKEN IN HANDLING AND STORING: During handling, the "buddy" (two man) system will be used. Containers should be periodically inspected for leaks (either visually or by a detector kit), and prior to transferring the containers from storage to work areas. Stringent control over all personnel handling HN1 must be exercised. Chemical showers, eyewash stations, and personal cleanliness facilities must be provided. Wash hands before meals and at the end of the workday. No smoking, eating, or drinking is permitted at the work site.

smoking, eating, or drinking is permitted at the work site. Decontamination equipment shall be conveniently located. Exits must be designed to permit rapid evacuation. HN1 should be stored in containers made of glass for Research Development Test and Evaluation (RDTE) quantities or one-ton steel containers for large quantities. Agent shall be double-contained in liquid-tight containers when in storage.

SECTION X - TRANSPORTATION DATA

PROPER SHIPPING NAME: Poisonous liquid, n.o.s.

DOT HAZARD CLASSIFICATION: Poison A

DOT LABEL: Poison Gas

DOT MARKING: Poison Liquid, n.o.s. (2,2'-Dichlorotriethylamine) NA 1955

DOT PLACARD: POISON GAS

PRECAUTIONS TO BE TAKEN IN TRANSPORTATION: Motor vehicles will be placecarded regardless of quantity. Driver shall be given full and complete information regarding shipment and conditions in case of emergency. All shipments will be handled per local SOP. (AR 55-355)

EMERGENCY ACCIDENT PRECAUTIONS AND PROCEDURES: See sections IV, VII, and VIII.

While the Chemical Research, Development and Engineering Center, Department of the Army believes that the data contained herein are factual and the opinions expressed are those of qualified experts regarding the results of the tests conducted, the data are not to be taken as a warranty or representation for which the Department of the Army or Chemical Research, Development and Engineering Center assumes legal responsibility. They are offered solely for your consideration, investigation, and verification. Any use of these data and information must be determined by the user to be in accordance with applicable Federal, State, and local laws and regulations.

LIST OF REFERENCES FOR MSDS FOR HN1

1. Compton, James A.F., Military Chemical and Biological Agents, The Telford Press, Caldwell, NJ, 1987.

2. Field Manual 8-9, NATO Handbook on the Medical Aspects of NBC Defensive Operations, Department of the Army, the Navy, and the Air Force, Washington, D.C., August 1973.

3. Summary Technical Report of Division 9, NDRC, Volume I. Chemical Warfare Agents and Related Chemical Problems, Parts I-II, "Chapter 6: Nitrogen Mustards", by Arthur C. Cope, Marshall Gates, and Birdsey Renshaw, Washington, DC, 1946.

4. Summary Technical Report of Division 9, NDRC, Volume I. Chemical Warfare Agents and Related Chemical Problems, Parts III-VI, "Chapter 22: Systemic Pharmacology and Pathology of Sulfur and Nitrogen Mustards", by William P. Anslow and C. Riley Houck, Washington, DC, 1946.

5. Field Manual 3-9, Military Chemistry and Chemical Compounds, Department of the Army and the Air Force, Washington, DC, 30 October 1975.

6. TM 8-285, Treatment of Chemical Agent Casualties and Conventional Military Chemical Injuries, Department of the Army, the Navy, and the Air Force, Washington, DC, May 1974.

7. The Merck Index, 10th ed., Merck and Co., Inc., Rahway, NJ, USA, 1983.

8. RTECS, Registry of Toxic Effects of Chemical Substances, US Department of Health and Human Services, Washington, DC, 1987.

9. CWS Field Lab Memo 1-4-5, Medical Division Status Summaries, Information Division, CWS Technical Command, Chemical Warfare Center, Edgewood Arsenal, MD, August 1944.

10. AMC-R 385-131, Safety Regulation for Chemical Agents H, HD, HT, GB, and VX, Department of the Army, Headquarters, United States Army Material Command, Alexandria, VA, 9 October 1987.

11. AR 385-64, Ammunition and Explosives Safety Standards, Headquarters, Department of the Army, Washington, DC, 22 May 1987.

12. CRDECR 385-1, Chemical, Explosive, and Occupational Safety and Health Program, Department of the Army, US Army Chemical Research, Development and Engineering Center, Aberdeen Proving Ground, MD, 15 August 1986.

ADDENDUM A

Equipment Description

M-9 Mask	—— Mask, Chemical Biological Special Purpose M9, M9A1.
M-40 Mask	—— Mask, Protective
M-17 Mask	—— (M-17, M-17A1, M17-A2) - Biological/Chemical Field Protective Mask.
M-3 Tap	—— Toxicological Agent Protective Ensemble
M-3 Hood	—— Toxicological Agent Protective
M-2A1 Boots	—— Butyl-Safety Toe-TAP-Toxicological Agent Protective
M3	—— M3 Gloves Toxicological Protective
M4	—— M4 Gloves Toxicological Protective
Gloves	—— Gloves-Norton-Toxicological Protective

(This page intentionally left blank.)

MATERIAL SAFETY DATA SHEET

LETHAL NERVE AGENT (GB)

SECTION I - GENERAL INFORMATION

DATE: 14 September 1988
REVISED: 28 February 1996

MANUFACTURER'S ADDRESS:

U.S. ARMY CHEMICAL BIOLOGICAL DEFENSE COMMAND
EDGEWOOD RESEARCH DEVELOPMENT, AND ENGINEERING CENTER (ERDEC)
ATTN: SCBRD-ODR-S
ABERDEEN PROVING GROUND, MD 20101-5423

Emergency telephone #' s: 0700-1630 EST: 410-671-4411/4414
After: 1630 EST: 410- 278-5201, Ask for Staff Duty Officer

CAS REGISTRY NUMBERS: 107-44-8, 50642-23-4

CHEMICAL NAME:

Isopropyl methylphosphonofluoridate

ALTERNATE CHEMICAL NAMES:

O-Isopropyl Methylphosphonofluoridate

Phosphonofluoridic acid, methyl-, isopropyl ester

Phosphonofluoridic acid, methyl-, 1-methylethyl ester

TRADE NAME AND SYNONYMS:

Isopropyl ester of methylphosphonofluoridic acid

Methylisopropoxfluorophosphine oxide
Isopropyl Methylfluorophosphonate
O-Isopropyl Methylisopropoxfluorophosphine oxide
Methylfluorophosphonic acid, isopropyl ester
Isopropoxymethylphosphonyl fluoride
Isopropyl methylfluorophosphate
Isopropoxymethylphosphoryl fluoride
GB
Sarin
Zarin

CHEMICAL FAMILY: Fluorinated organophosphorous compound

FORMULA/CHEMICAL STRUCTURE:

C4H10FO2P

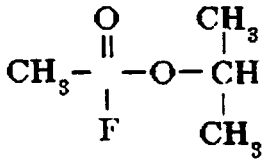

NFPA 704 HAZARD SIGNAL:

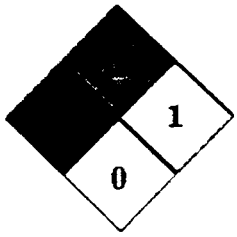

Health - 4
Flammability - 1
Reactivity - 1
Special - 0

SECTION II - HAZARDOUS INGREDIENTS

INGREDIENTS NAME	FORMULA	PERCENTAGE BY WEIGHT	AIRBORNE EXPOSURE LIMIT (AEL)
GB	C4H10FO2P	100	0.0001 mg/m3

SECTION III - PHYSICAL DATA

BOILING POINT: 158 C (316 F)

VAPOR PRESSURE (mm Hg): 2.9 @ 25 C

VAPOR DENSITY (AIR=1): 4.86

SOLUBILITY: Miscible with water. Soluble in all organic solvents.

SPECIFIC GRAVITY (H2O=1): 1.0887 @ 25 C

FREEZING/MELTING POINT: -56 C

LIQUID DENSITY (g/cc):

1.0887 @ 25 C
1.102 @ 20 C

PERCENTAGE VOLATILE BY VOLUME:

22.000 m/m3 @ 25 C
16.090 m/m3 @ 20 C

APPEARANCE AND ODOR: Colorless liquid. Odorless in pure form.

SECTION IV - FIRE AND EXPLOSION DATA

FLASH POINT (METHOD USED): Did not flash to 280 F

FLAMMABLE LIMIT: Not applicable

LOWER EXPLOSIVE LIMIT: Not available

UPPER EXPLOSIVE LIMIT: Not available

EXTINGUISHING MEDIA: Water mist, fog, foam, CO2.

Avoid using extinguishing methods that will cause splashing or spreading of the GB.

SPECIAL FIRE FIGHTING PROCEDURES: GB will react with steam or water to produce toxic and corrosive vapors. All persons not engaged in extinguishing the fire should be evacuated. Fires involving GB should be contained to prevent contamination to uncontrolled areas. When responding to a fire alarm in buildings or areas containing agents, firefighting personnel should wear full firefighting protective clothing (without TAP clothing) during chemical agent firefighting and fire rescue operations. Respiratory protection is required. Positive pressure, full face piece, NIOSH-approved self-contained breathing apparatus (SCBA) will be worn where there is danger of oxygen deficiency and when directed by the fire chief or chemical accident/incident (CAI) operations officer. In cases where firefighters are responding to a chemical accident/incident for rescue/reconnaissance purposes, they will wear appropriate levels of protective clothing (**See Section VIII**).

Do not breathe fumes. Skin contact with nerve agents must be avoided at all times. Although the fire may destroy most of the agent, care must still be taken to assure the agent or contaminated liquids do not further contaminate other areas or sewers. Contact with the agent liquid or vapor can be fatal.

UNUSUAL FIRE AND EXPLOSION HAZARDS: Hydrogen may be present.

SECTION V - HEALTH HAZARD DATA

AIRBORNE EXPOSURE LIMITS (AEL): The permissible airborne exposure concentration for GB for an 8-hour workday or a 40-hour work week is an 8-hour time weighted average (TWA) of 0.0001 mg/m3. This value is based on the TWA of GB which can be found in "AR 40-8, Occupational Health Guidelines for the Evaluation and Control of Occupational Exposure to Nerve Agents GA, GB, GD, and VX." To date, the Occupational Safety and Health Administration (OSHA) has not promulgated a permissible exposure concentration for GB.

GB is not listed by the International Agency for Research on Cancer (IARC), American Conference of Governmental Industrial Hygienists (ACGIH), Occupational Safety and Health Administration (OSHA), or National Toxicology Program (NTP) as a carcinogen.

EFFECTS OF OVEREXPOSURE: GB is a lethal cholinesterase inhibitor. Doses that are potentially life threatening may be only slightly larger than those producing least effects.

GB

Route Dosage	Form	Effect	Type
ocular	vapor	ECt50	<2 mg-min/m3
inhalation	vapor	ECt50	<2 mg-min/m3
inhalation (15 l/min)	vapor	ICt50	35 mg-min/m3
inhalation	vapor	LCt50	70 mg-min/m3
percutaneous	liquid	LD50	1700 mg/70 kg man

Effective dosages for vapor are estimated for exposure durations of 2-10 minutes.

Symptoms of overexposure may occur within minutes or hours, depending upon dose. They include: miosis (constriction of pupils) and visual effects, headaches and pressure sensation, runny nose and nasal congestion, salivation, tightness in the chest, nausea, vomiting, giddiness, anxiety, difficulty in thinking and sleeping, nightmares, muscle twitches, tremors, weakness, abdominal cramps, diarrhea, involuntary urination and defecation. With severe exposure symptoms progress to convulsions and respiratory failure.

EMERGENCY AND FIRST AID PROCEDURES:

INHALATION: Hold breath until respiratory protective mask is donned. If severe signs of agent exposure appear (chest tightens, pupil constriction, incoordination, etc.), immediately administer, in rapid succession, all three Nerve Agent Antidote Kit(s), Mark I injectors (or atropine if directed by physician).

Injections using the Mark I kit injectors may be repeated at 5 to 20 minute intervals if signs and symptoms are progressing until three series of injections have been administered. No more injections will be given unless directed by medical personnel. In addition, a record will be maintained of all injections given. If breathing has stopped, give artificial respiration. Mouth-to-mouth resuscitation should be used when approved mask-bag or oxygen delivery systems are not available. Do not use mouth-to-mouth resuscitation when facial contamination exists. If breathing is difficult, administer oxygen. Seek medical attention IMMEDIATELY.

EYE CONTACT: Immediately flush eyes with water for at least 15 minutes, then don respiratory protective mask. Although miosis (pinpointing of the pupils) may be an early sign of agent exposure, an injection will not be administered when miosis is the only sign present. Instead, the individual will be taken IMMEDIATELY to a medical treatment facility for observation.

SKIN CONTACT: Don respiratory protective mask and remove contaminated clothing. Immediately wash contaminated skin with copious amounts of soap and water, 10% sodium

carbonate solution, or 5% liquid household bleach. Rinse well with water to remove decontaminant. Administer Nerve Agent Antidote Kit(s), MARK I injectors only if local sweating and muscular twitching symptoms are observed. Seek medical attention IMMEDIATELY.

INGESTION: Do not induce vomiting. First symptoms are likely to be gastrointestinal. IMMEDIATELY administer Nerve Agent Antidote Kit(s), MARK I injector(s). Seek medical attention IMMEDIATELY.

SECTION VI - REACTIVITY DATA

STABILITY: Stable when pure.

INCOMPATIBILITY: Attacks tin, magnesium, cadmium plated steel, and some aluminum. Slightly attacks copper, brass, and lead; practically no attack on 1020 steels, Inconel & K-monel.

HAZARDOUS DECOMPOSITION: Hydrolyzes to form HF under acid conditions and isopropyl alcohol & polymers under basic conditions.

HAZARDOUS POLYMERIZATION: Does not occur.

SECTION VII - SPILL, LEAK, AND DISPOSAL PROCEDURES

STEPS TO BE TAKEN IN CASE MATERIAL IS RELEASED OR SPILLED: If leaks or spills occur, only personnel in full protective clothing will remain in area (**See Section VIII**). In case of personnel contamination see **Section V** for emergency and first aid instructions.

RECOMMENDED FIELD PROCEDURES: Spills must be contained by covering with vermiculite, diatomaceous earth, clay, fine sand, sponges, and paper or cloth towels. Decontaminate with copious amounts of aqueous sodium hydroxide solution (a minimum 10 wt. %). Scoop up all material and clothing and place in a DOT approved container. Cover the contents with decontaminating solution as above. After sealing, the exterior of the container will be decontaminated and then labeled according to EPA and DOT regulations. All leaking containers will be over packed with vermiculite placed between the interior and exterior containers. Decontaminate and label according to EPA and DOT regulations. Dispose of the material according to waste disposal methods provided below. Dispose of decontaminate according to Federal, state and local regulations. Conduct general area monitoring with an

SECTION IV - FIRE AND EXPLOSION DATA

FLASH POINT: No immediate danger of fire or explosion

FLAMMABILITY LIMITS (% BY VOLUME): Data not available

EXTINGUISHING MEDIA: Water, fog, foam, CO_2. Avoid use of extinguishing methods that will splash or spread HN1.

UNUSUAL FIRE AND EXPLOSION HAZARDS: Vapors of unburned agent will exhibit toxic effects.

SPECIAL FIRE FIGHTING PROCEDURES: Full protective clothing (see Section VIII) and full respiratory protection must be worn when fighting fires inside buildings and areas where HN1 is stored. Full protective clothing and canister or filter type masks can be worn where oxygen deficiency is not a problem. All persons not engaged in extinguishing the fire should be evacuated. Skin contact and inhalation of HN1 and its vapors must be avoided at all times. Although the fire may destroy most of the HN1, care must be taken to assure that the HN1 does not contaminate uncontrolled areas and that the fire fighters are adequately protected from physical contact with the agent and agent fumes. Contact may be fatal.

SECTION V - HEALTH HAZARD DATA

RECOMMENDED EXPOSURE LIMITS (REL): An REL is not available for HN1. No individual should be exposed to any direct skin or eye contact or any detectable airborne concentrations. Nitrogen mustards are classified as carcinogens by the International Agency for Research on Cancer (IARC).

EFFECTS OF OVEREXPOSURE: The vapors are irritating to the eyes and nasal membranes even in low concentration. HN1 is a vesicant (causing blisters) and alkylating agent producing cytotoxic action on the hematopoietic (blood-forming) tissues. HN1 is not naturally detoxified by the body, therefore repeated exposure produces a cumulative effect.

Median lethal dosages of HN1 in man are the following:

LCt50 (man, inhalation) = 1500 mg-min/m^3

LCt50 (man, percutaneous vapor) = 20,000 mg-min/m^3

Median incapacitating dosages of HN1 in man are the following:

ICt50 (man, eye contact) = 200 mg-min/m^3

ICt50 (man, percutaneous) = 9000 mg-min/m^3

Vesicancy doses in man are the following:
Liquid:

43.6 microliters produced 29 percent erythema
218 microliters produced 72 percent erythema
218 microliters produced 20 percent blisters (4 mm. av. diameter.)

ACUTE PHYSIOLOGICAL ACTION OF HN1 IS LOCAL AND SYSTEMIC.

Locally, HN1 affects both the eyes and the skin. Skin damage occurs after percutaneous resorption. Skin penetration is rapid and skin irritation is noted very shortly after contact with the agent. Reddening (erythema) of the skin may occur within 30 minutes to 1 hour following the exposure, depending on degree of exposure and individual sensitivity. Blistering may not occur for more than 12 hours following exposure. Tender skin, mucous membrane and perspiration covered skin are more sensitive to the effects of HN1. Local action on the eyes is extremely rapid, and produces severe neurotic damage and loss of eyesight. Exposure of eyes to HN1 vapor or aerosol produces lacrimation, photophobia, and inflammation of the conjunctiva and cornea. Greatest immediate effect on HN-1 is on the eyes.

Systemic actions occur primarily through inhalation and ingestion. When inhaled, the lesions caused by nitrogen mustards are similar to those caused by mustards. They decrease in severity down the respiratory tract from the point of entry. The upper respiratory tract (nose, throat, trachea) is inflamed after a few hours latency period, accompanied by sneezing, coughing, hoarseness progressing to loss of voice, and persistent cough. Fever and moist rails develop followed by loss of appetite, diarrhea, and apathy. Broncho pneumonia may appear after the first twenty four hours. Exposure to near lethal doses of HN1 can produce injury to bone marrow, lymph nodes, and spleen as indicated by a drop in WBC count, and results in increased susceptibility to local and systemic infections. Ingestion of HN1 will produce severe stomach pains, vomiting, and bloody stools.

Chronic exposure to HN1 can cause sensitization and chronic lung impairment (cough, shortness of breath, chest pain). In mild vapor exposures there may be no skin lesions. After severe exposure or after exposure to liquid nitrogen mustard, reddening may appear earlier than in mustard contamination. There may be irritation and itching as with mustard; blisters may appear later. However, blisters may not occur for more than 12 hours following exposure. Skin lesions are similar to those caused by mustard.

EMERGENCY AND FIRST AID PROCEDURES:

Inhalation: Remove from the source immediately. If breathing has stopped, give artificial respiration. If breathing

is difficult, administer oxygen. Seek medical attention immediately.

Eye Contact: immediately flush eyes with water for 10-15 minutes, pulling eyelids apart with fingers and pouring water into eyes. Do not cover eyes with bandages. After flushing eyes with water, protect eyes with dark or opaque goggles. Seek medical attention immediately.

Skin Contact: Don respiratory protective mask and gloves; remove victim from source immediately and remove contaminated clothing. immediately decontaminate skin by flushing with a 5% solution of liquid household bleach. After 3-4 minutes, wash off with soap and water to remove decon agent and protect against erythema. Seek medical attention immediately.

The rate of absorption of liquid nitrogen mustards through the skin is slower than that of mustard. Therefore, to prevent systemic toxicity, decontamination should be done as late as 2 or 3 hours after exposure even if it increases the severity of the local reaction. Further cleansing may be done with soap and water.

Ingestion: Do not induce vomiting. Give victim milk to drink. Seek medical attention immediately.

SECTION VI - REACTIVITY DATA

STABILITY: Polymerizes slowly

RATE OF HYDROLYSIS: Slow

HYDROLYSIS PRODUCTS: Hydroxyl derivatives and condensation products.

INCOMPATIBILITY: Corrosive to ferrous alloys beginning at 65 DEG C (149 DEG F)

HAZARDOUS DECOMPOSITION: Toxic intermediate products are produced during hydrolysis. Approximate half-life in water at 25 DEG C in 1.3 minutes. Decomposition comes through slow change into quaternary ammonium salts. Decomposition point is below 194 DEG C (381.2 DEG F)

HAZARDOUS POLYMERIZATION: Slowly

SECTION VII - SPILL, LEAK, AND DISPOSAL PROCEDURES

STEPS TO BE TAKEN IN CASE MATERIAL IS RELEASED OR SPILLED: Only personnel in full protective clothing will be allowed in an area where HN1 is spilled. HN1 should be contained using vermiculite,

diatomaceous earth, clay or fine sand and neutralized as soon as possible. A minimum of 65 grams of decon solution (5.25% Sodium Hypochloritite solution) is required for each gram of HN1. HN1 must be added to the decon solution and NOT DECON SOLUTION TO HN1. Decontamination/agent solution is allowed to agitate for a minimum of one hour. Agitation is not necessary following the first hour if a single phase is obtained. At the end of 24 hours, the resulting solution shall be adjusted to a pH between 10 to 11. Test for presence of active chlorine by use of acidic potassium iodide solution to give free iodine color. Place 3 ml of the decontaminate in a test tube. Add several crystals of potassium iodine and swirl to dissolve. Add 3 ml of 50 wt% sulfuric acid:water and swirl. IMMEDIATE iodine color indicates the presence of active chlorine. If negative, add additional 5.25% sodium hypochlorite solution to the decontamination solution, wait two hours, then test again for active chlorine. Continue procedure until positive chlorine is given by solution.

A 10 wt % HTH mixture may be substituted for sodium hypochlorite. Use 65 grams of decon per gram of HN1 and continue the test as described for sodium hypochlorite.

Do not use dry STB or HTH as they react violently with some chemicals. Scoop up all contaminated material and place in approved DOT containers. Pour in STB slurry or HTH solution. Decontaminate the outside of containers and label in accordance with federal, state and local regulations and hold for disposal.

NOTE: Surfaces contaminated with HN1 and then rinsed with water may evolve sufficient HN1 vapor to produce a physiological response.

WASTE DISPOSAL METHOD: All decontaminated material should be collected, contained, and chemically decontaminated, then thermally decomposed in an approved incinerator for HN1, which will filter or scrub toxic by-products from effluent air before discharge to the atmosphere. Any contaminated protective clothing should be decontaminated using HTH or bleach and analyzed to assure it is free of detectable contamination. The clothing should then be sealed in plastic bags inside properly labeled drums and held for shipment back to the Department of Army issue point. Decontamination of waste or excess material shall be accomplished in accordance with the following procedure:

(a) HN1 on laboratory glassware may be oxidized reacting it with strong bleaches, alkalies, or other oxidizers.

(b) Chemical decontamination of HN1 should be accomplished as described above. HN1 has poor solubility in water.

Decontaminated waste and/or HN1 shall be transported according to local SOP (in accordance with AR 55-355). Final disposition will be controlled according to AMCR 385-131 and APG 200-2 and RCRA state regulations which take precedence (NOTE: Some states

consider certain decontaminated surety agents as RCRA hazardous waste. Local regulations must be considered before disposal action is taken).

SECTION VIII - SPECIAL PROTECTION INFORMATION

(U)RESPIRATORY PROTECTION:

HN1 Concentration	Respiratory Protective Equipment
Less than or equal to 0.003 mg/m3 as an 8-hr TWA	Protective mask not required provided that: (a) Continous real-time monitoring (with alarm capability) is conducted in the work area at the 0.003 mg/m3 level of detection. (b) M9, M17 or M40 mask is available and donned if concentrations exceed 0.003 mg/m3. (c) Exposure has been limited to the extent practicable by engineering control (remote operations, ventilations, and process isolation) or work practices. If those conditions are not met then the following applies: Full facepiece, chemical canister, air-purifying respirators. (The M9, M17 or M40 series or other certified equivalent masks acceptable for this purpose in conjunction with the M3 toxicological agent protective (TAP) suit for dermal protection.)
Greater than 0.003 as an 8-hr TWA	The Demilitarization Protective Ensemble (DPE), 30 mil, may be used with prior approval from the AMC Field Safety Activity Use time for the 30 mil DPE must be restricted to two hours or less. NOTE: When 30 mil DPE is not available the M17 or M40 mask with Level A protective ensemble including impregnated innerwear can be used. However, use time shall be restricted to the extent operationally feasible, and may not exceed one hour.

As an additional precaution, the cuffs of the sleeves and the legs of the M3 suit shall be taped to the gloves and boots to reduce aspiration.

VENTILATION: Local Exhaust: Mandatory must be filtered or scrubbed to limit exit concentration to 0.003 mg/m3 averaged over 8 hr/day. Filtration must be adequate to maintain stack concentration below 0.03 mg/m3 as a 1 hour TWA. These values are based on structural similarity to HD.

SPECIAL: Chemical laboratory hoods shall have an average inward face velocity of 100 linear feet per minute (lfpm) plus or minus 10% with the velocity at any point not deviating from the average face velocity by more than 20%. Laboratory hoods shall be located such that cross drafts do not exceed 20 percent of the inward face velocity. A visual performance test utilizing smoke producing devices shall be performed in the assessment of the inclosure's ability to contain agent HN1.

Other: Recirculation of exhaust air from agent areas is prohibited. No connection between agent areas and other areas through ventilation system is permitted. Emergency backup power is necessary. Hoods should be tested semi-annually or after modification or maintenance operations. Operations should be performed 20 cm inside hoods.

PROTECTIVE GLOVES: MANDATORY - Butyl Toxicological Agent Protective Gloves (M3,M4, or glove set).

EYE PROTECTION: As a minimum, chemical goggles will be worn. For splash hazard use goggles and face-shield.

OTHER PROTECTIVE EQUIPMENT: Full protective clothing will consist of the M3 butyl rubber suit with hood, M2A1 boots, M3 gloves, underwear, M9 series mask and coveralls (if desired), STEPOI or the DPE. For general lab work, gloves and lab coat shall be worn with M9, M17, or M40 Mask readily available.

In addition, when handling contaminated lab animals wearing clean smock, foot covers, and head covers are required daily.

SECTION IX - SPECIAL PRECAUTIONS

PRECAUTIONS TO BE TAKEN IN HANDLING AND STORING: During handling, the "buddy" (two man) system will be used. Containers should be periodically inspected for leaks (either visually or by a detector kit), and prior to transferring the containers from storage to work areas. Stringent control over all personnel handling HN1 must be exercised. Chemical showers, eyewash stations, and personal cleanliness facilities must be provided. Wash hands before meals and at the end of the workday. No smoking, eating, or drinking is permitted at the work site.

smoking, eating, or drinking is permitted at the work site. Decontamination equipment shall be conveniently located. Exits must be designed to permit rapid evacuation. HN1 should be stored in containers made of glass for Research Development Test and Evaluation (RDTE) quantities or one-ton steel containers for large quantities. Agent shall be double-contained in liquid-tight containers when in storage.

SECTION X - TRANSPORTATION DATA

PROPER SHIPPING NAME: Poisonous liquid, n.o.s.

DOT HAZARD CLASSIFICATION: Poison A

DOT LABEL: Poison Gas

DOT MARKING: Poison Liquid, n.o.s. (2,2'-Dichlorotriethylamine) NA 1955

DOT PLACARD: POISON GAS

PRECAUTIONS TO BE TAKEN IN TRANSPORTATION: Motor vehicles will be placecarded regardless of quantity. Driver shall be given full and complete information regarding shipment and conditions in case of emergency. All shipments will be handled per local SOP. (AR 55-355)

EMERGENCY ACCIDENT PRECAUTIONS AND PROCEDURES: See sections IV, VII, and VIII.

While the Chemical Research, Development and Engineering Center, Department of the Army believes that the data contained herein are factual and the opinions expressed are those of qualified experts regarding the results of the tests conducted, the data are not to be taken as a warranty or representation for which the Department of the Army or Chemical Research, Development and Engineering Center assumes legal responsibility. They are offered solely for your consideration, investigation, and verification. Any use of these data and information must be determined by the user to be in accordance with applicable Federal, State, and local laws and regulations.

LIST OF REFERENCES FOR MSDS FOR HN1

1. Compton, James A.F., Military Chemical and Biological Agents, The Telford Press, Caldwell, NJ, 1987.

2. Field Manual 8-9, NATO Handbook on the Medical Aspects of NBC Defensive Operations, Department of the Army, the Navy, and the Air Force, Washington, D.C., August 1973.

3. Summary Technical Report of Division 9, NDRC, Volume I. Chemical Warfare Agents and Related Chemical Problems, Parts I-II, "Chapter 6: Nitrogen Mustards", by Arthur C. Cope, Marshall Gates, and Birdsey Renshaw, Washington, DC, 1946.

4. Summary Technical Report of Division 9, NDRC, Volume I. Chemical Warfare Agents and Related Chemical Problems, Parts III-VI, "Chapter 22: Systemic Pharmacology and Pathology of Sulfur and Nitrogen Mustards", by William P. Anslow and C. Riley Houck, Washington, DC, 1946.

5. Field Manual 3-9, Military Chemistry and Chemical Compounds, Department of the Army and the Air Force, Washington, DC, 30 October 1975.

6. TM 8-285, Treatment of Chemical Agent Casualties and Conventional Military Chemical Injuries, Department of the Army, the Navy, and the Air Force, Washington, DC, May 1974.

7. The Merck Index, 10th ed., Merck and Co., Inc., Rahway, NJ, USA, 1983.

8. RTECS, Registry of Toxic Effects of Chemical Substances, US Department of Health and Human Services, Washington, DC, 1987.

9. CWS Field Lab Memo 1-4-5, Medical Division Status Summaries, Information Division, CWS Technical Command, Chemical Warfare Center, Edgewood Arsenal, MD, August 1944.

10. AMC-R 385-131, Safety Regulation for Chemical Agents H, HD, HT, GB, and VX, Department of the Army, Headquarters, United States Army Material Command, Alexandria, VA, 9 October 1987.

11. AR 385-64, Ammunition and Explosives Safety Standards, Headquarters, Department of the Army, Washington, DC, 22 May 1987.

12. CRDECR 385-1, Chemical, Explosive, and Occupational Safety and Health Program, Department of the Army, US Army Chemical Research, Development and Engineering Center, Aberdeen Proving Ground, MD, 15 August 1986.

approved monitor to confirm that the atmospheric concentrations do not exceed the airborne exposure limits (**See Sections II and VIII**).

If 10 wt.% aqueous sodium hydroxide solution is not available then the following decontaminants may be used instead and are listed in the order of preference: Decontaminating Agent, DS (DS2), Sodium Carbonate, and Supertropical Bleach Slurry (STB).

RECOMMENDED LABORATORY PROCEDURES: A minimum of 56 grams of decon solution is required for each gram of GB. Decontaminant and agent solution is allowed to agitate for a minimum of one hour. Agitation is not necessary following the first hour. At the end of the hour, the resulting solution should be adjusted to a pH greater than 11.5. If the pH is below 11.5, NaOH should be added until a pH above 11.5 can be maintained for 60 minutes. An alternate solution for the decontamination of GB is 10 wt.% sodium carbonate in place of the 10% sodium hydroxide solution above. Continue with 56 grams of decon for each gram of agent. Agitate for one hour but allow three hours for the reaction. The final pH should be adjusted to above zero. It is also permitted to substitute 5.25% sodium hypochlorite or 25 wt. % Monoethylamine (MEA) for the 10% sodium hydroxide solution above. MEA must be completely dissolved in water before addition of the agent. Continue with 56 grams of decon for each gram of GB and provide agitation for one hour. Continue with same ratios and time stipulations. Scoop up all material and clothing and place in a DOT approved container. Cover the contents with decontaminating solution as above. After sealing, the exterior of the container will be decontaminated and then labeled according to EPA and DOT regulations. All leaking containers will be over packed with vermiculite placed between the interior and exterior containers. Decontaminate and label according to EPA and DOT regulations. Dispose of according to waste disposal methods provided below. Dispose of decontaminate according to Federal, state and local regulations. Conduct general area monitoring with an approved monitor to confirm that the atmospheric concentrations do not exceed the airborne exposure limits (**See Sections II and VIII**).

WASTE DISPOSAL METHOD: Open pit burning or burying of GB or items containing

CAUTION
CHEMICAL STORAGE

or contaminated with GB in any quantity is prohibited. The detoxified GB (using procedures above) can be thermally destroyed by incineration in EPA approved incinerators according to appropriate provisions of Federal, state and local Resource Conservation and Recovery Act (RCRA) Regulations.

NOTE: Some states define decontaminated surety material as an RCRA Hazardous waste.

SECTION VIII - SPECIAL PROTECTION INFORMATION

RESPIRATORY PROTECTION:

CONCENTRATION	RESPIRATORY PROTECTIVE EQUIPMENT.
< 0.0001 mg/m3	A full face piece, chemical canister, air purifying protective mask will be on hand for escape. (The M9-, M17-, or M40-series masks are acceptable for this purpose. Other masks certified as equivalent may be used)
0.0001 or =0.2 mg/m3	A NIOSH/MSHA approved pressure demand full face piece SCBA or supplied air respirators with escape air cylinder may be used. Alternatively, a full face piece, chemical canister air-purifying protective mask is acceptable for this purpose (See DA PAM 385-61 for determination of appropriate level)
0.2 or unknown mg/m3	NIOSH/MSHA approved pressure demand full f ace piece SCBA suitable for use in high agent concentrations with protective ensemble (See DA PAM 385-61 for examples)

VENTILATION:

Local Exhaust: Mandatory. Must be filtered or scrubbed to limit exit concentration to < 0.0001 mg/m3. Air emissions will meet local, state and federal regulations.

Special: Chemical laboratory hoods will have an average inward face velocity of 100 linear feet per minute (lfpm) +/- 10% with the velocity at any point not deviating from the average face velocity by more than 20%. Existing laboratory hoods will have an inward face velocity of 150 lfpm +/- 20%. Laboratory hoods will be located such that cross drafts do not exceed 20% of the inward face velocity. A visual performance test using smoke producing devices will be performed in the assessment of the hoods ability to contain agent GB.

Other: Recirculation of exhaust air from agent areas is prohibited. No connection is allowed between agent areas and other areas through the ventilation system. Emergency backup power is necessary. Hoods should be tested at least semiannually or after modification or maintenance operations. Operations should be performed 20 centimeters inside hood face.

PROTECTIVE GLOVES:

Butyl Rubber Glove M3 and M4
Norton, Chemical Protective Glove Set

EYE PROTECTION: As a minimum chemical goggles will be worn. For splash hazards use goggles and face shield.

OTHER PROTECTIVE EQUIPMENT: For general lab work, gloves and lab coat will be worn with mask readily accessible. In addition, daily clean smocks, foot covers, and head covers will be required when handling contaminated lab animals.

MONITORING: Available monitoring equipment for agent GB is the M8/M9 Detector paper, detector ticket, blue band tube, M256/M256A1 kits, bubbler, Depot Area Air Monitoring System (DAAMS), Automatic Continuous Air Monitoring System (ACAMS), real time monitoring (RTM), Demilitarization Chemical Agent Concentrator (DCAC), M8/M43, M8A1/M43A2, Hydrogen Flame Photometric Emission Detector (HYFED), CAM-M1, Miniature Chemical Agent Monitor (MINICAM) and the Real Time Analytical Platform (RTAP).

Real-time, low-level monitors (with alarm) are required for GB operations. In their absence, an Immediately Dangerous to Life and Health (IDLH) atmosphere must be presumed. Laboratory operations conducted in appropriately maintained and alarmed engineering controls require only periodic low-level monitoring.

SECTION IX - SPECIAL PRECAUTIONS

PRECAUTIONS TO BE TAKEN IN HANDLING AND STORING: When handling agents, the buddy system will be incorporated. No smoking, eating and drinking in areas containing agents are permitted. Containers should be periodically inspected for leaks either visually or by a detector kit).

Stringent control over all personnel practices must be exercised Decontamination equipment will be conveniently located. Exits must be designed to permit rapid evacuation. Chemical showers, eyewash stations, and personal cleanliness facilities must be provided. Wash hands before meals and each worker will shower thoroughly with special attention given to hair, face, neck, and hands, using plenty of soap and water before leaving at the end of the work day.

OTHER PRECAUTIONS: GB must be double contained in liquid and vapor tight containers when in storage or outside a ventilation hood.

For additional information see "AR 385-61, The Army Toxic Chemical Agent Safety Program," "DA PAM 385-61, Toxic Chemical Agent Safety Standards," and "AR 40-8, Occupational Health Guidelines for the Evaluation and Control of Occupational Exposure to Nerve Agents GA, GB, GD, and VX."

SECTION X - TRANSPORTATION DATA

PROPER SHIPPING NAME: Poisonous liquids, n.o.s.

DOT HAZARD CLASSIFICATION: 6.1, Packing Group I,

Hazard Zone A

DOT LABEL: Poison

DOT MARKING: Poisonous liquid, n.o.s. (Isopropyl methylphosphonofluoridate) UN2810, Inhalation Hazard

DOT PLACARD: Poison

EMERGENCY ACCIDENT PRECAUTIONS AND PROCEDURES: **See Sections IV, VII and VIII.**

PRECAUTIONS TO BE TAKEN IN TRANSPORTATION: Motor vehicles will be placarded regardless of quantity. Drivers will be given full information regarding shipment and conditions in case of an emergency. AR 50-6 deals specifically with the shipment of chemical agents. Shipments of agent will be escorted in accordance with AR 740-32.

While the Edgewood Research Development, and Engineering Center, Department of the Army believes that the data contained herein are factual and the opinions expressed are those of the experts regarding the results of the tests conducted, the data are not to be taken as a warranty or representation for which the Department of the Army or Edgewood Research Development, and Engineering Center assume legal responsibility. They are offered solely for your consideration, investigation, and verification. Any use of this data and information must be determined by the user to be in accordance with applicable Federal, State, and local laws and regulations.

MALLINCKRODT SCIENCE PRODUCTS DIV -- CHLOROFORM, CAT #4434 - CHLOROFORM
MATERIAL SAFETY DATA SHEET
FSC: 6810
NIIN: 010626566
Manufacturer's CAGE: 62910
Part No. Indicator: A
Part Number/Trade Name: CHLOROFORM, CAT #4434

==========

General Information

==========

Item Name: CHLOROFORM
Company's Name: MALLINCKRODT INC.,SCIENCE PRODUCTS DIVISION
Company's Street: PARIS BYPASS
Company's P. O. Box: M
Company's City: PARIS
Company's State: KY
Company's Country: US
Company's Zip Code: 40361
Company's Emerg Ph #: 314-982-5000
Company's Info Ph #: 314-982-5000
Record No. For Safety Entry: 001
Tot Safety Entries This Stk#: 001
Date MSDS Prepared: 01JAN87
Safety Data Review Date: 17JUN86
Supply Item Manager: KX
MSDS Serial Number: BGJVV
Hazard Characteristic Code: T3
Unit Of Issue: BT
Unit Of Issue Container Qty: 80 FL OUNCES
Type Of Container: BOTTLE
Net Unit Weight: 7.5 LBS

==========

Ingredients/Identity Information

==========

Proprietary: NO
Ingredient: CHLOROFORM (SARA III)
Ingredient Sequence Number: 01
Percent: >99
NIOSH (RTECS) Number: FS9100000
CAS Number: 67-66-3
OSHA PEL: (C) 50 PPM
ACGIH TLV: 10 PPM; A2; 9293

==========

Physical/Chemical Characteristics

==========

Appearance And Odor: CLEAR COLORLESS LIQ.HEAVY ETHEREAL ODOR
Boiling Point: 142F,61C
Vapor Pressure (MM Hg/70 F): 100
Vapor Density (Air=1): 4.1
Specific Gravity: 1.49
Evaporation Rate And Ref: 11.6(BU-AC=1)
Solubility In Water: SLIGHT
Percent Volatiles By Volume: 100

Fire and Explosion Hazard Data

Flash Point: NONE
Extinguishing Media: EXTINQUISH W. AGENT SUITABLE FOR SURROUNDING FIRE.
Special Fire Fighting Proc: WEAR SELF-CNTD BRTHG,APP H20 SPRAY TO COOL CONTR.
Unusual Fire And Expl Hazrds: NOT CONSIDERED TO BE AN EXPLOSION HAZARD; SLIGHT FIRE HAZARD WHEN EXPOSED TO HIGH HEAT.

Reactivity Data

Stability: YES
Cond To Avoid (Stability): PREVENT EXPOSURE TO AIR AND LIGHT(FORM PHOSGENE & HCL GASES)
Materials To Avoid: STRONG CAUSTICS,CHEM ACTIVE METALS,AL,K,NA,METHANO, OXIDZRS.
Hazardous Decomp Products: HCL,CL2,PHOSGENE,& CO GASES WHEN HEATED TO DECOMPOSITION.
Hazardous Poly Occur: NO

Health Hazard Data

Carcinogenicity - NTP: YES
Carcinogenicity - IARC: YES
Carcinogenicity - OSHA: NO
Explanation Carcinogenicity: CHLOROFORM IS SUSPECTED BY NTP AND IARC TO BE CARCINOGENIC.
Signs/Symptoms Of Overexp: INH:ANESTHETIC.MAY IRRIT/IRREG HEART BEAT; INGEST:SEV BURN OF MOUTH/THROAT;SKIN/EYES:IRRITN/BURNS.
Emergency/First Aid Proc: INHAL:REMOVE TO FRESH AIR.GIVE CPR/OXYGEN IF NEEDED;INGEST:IF SWALLOWED,GIVE TWO GLASSES OF WATER & INDUCE VOMIT.NOTHING BY MOUTH IF UNCON;SKIN/EYE EXPOSURE:RMV CONTMNTD CLOTHG.WASH SKIN W/SOAP & H2O.FLUSH SKIN/EYES W/LG H2O;GET MED HELP IMMEDIATLY

Precautions for Safe Handling and Use

Steps If Matl Released/Spill: ELIM IGN SOURCES,VENTL & EVAC AREA.USE PROTCV CLOTHG/RESP PROTCTION FM VAP.CONTAIN & RECOVR LIQ IF POSS.ABSORB W/ VRMCULITE,EARTH,ETC.SCOOP UP W/NON-SPARKG TOOLS & PLACE IN CLOSD CONTNRS. USE H2O SPRAY TO DISPERSE VAP/COOL CNTNR.DO NOT FLUSH TO SEWR
Waste Disposal Method: SPILLS & LOT SIZES MAY BE COLLECTD & ATOMIZED IN RCRA APPRVD COMBUSTN CHMBR EQUIPPD W/EFFLUENT GASE CLEANG DIVEICE,OR ABSORBED IN ABSORBNT & DISPOSED IN RCRA APPRVD FACILITY.ENSURE COMPLIANCE W/LOCAL,STATE & FEDERAL REGS; RCRA/CWA RQ:5000 LBS.
Precautions-Handling/Storing: KEEP IN TIGHTLY CLOSED CONTANRS AT COOL,DRY, VENTILATED PLACE.PROTECT AGAINST PHY DAMAGE.
Other Precautions: AVOID BREATHING VAPS.USE W/ADEQUATE VENTILATION.KEEP CONTAINERS CLOSED.WASH THOROUGHLY AFTER HANDLING.AVOID SKIN,EYES & CLOTHING CONTACT;DANGER!MAY BE FATAL IF SWALLOWED,INHALED/ABSORBD BYSKIN

Control Measures

Respiratory Protection: SUPPLIED AIR RESPIR/SCBA; ESCAPE: GAS MASK
Ventilation: LOCAL EXHAUST TO MAINTN BELOW TLV.
Protective Gloves: IMPERVIOUS
Eye Protection: GOGGLES/FACE SHIELD
Other Protective Equipment: FULL PROTECTIVE CLOTHING,SAFETY SHOWER,EYE WASH STATION
Suppl. Safety & Health Data: MSDS FROM MFR DATED 14NOV85,CONFORMS TO OSHA HAZ COMM STD; VAP PRESSURE AT 10.4C; WARNING! POSSIBLE CANCER HAZARD ON TESTS WITH LABORATORY ANIMALS AS DEFINED BY IARC,MAK,NIOSH,NTP & ACGIH.

Transportation Data

Trans Data Review Date: 86251
DOT PSN Code: DHF
DOT Proper Shipping Name: CHLOROFORM
DOT Class: 6.1
DOT ID Number: UN1888
DOT Pack Group: II
DOT Label: KEEP AWAY FROM FOOD *
IMO PSN Code: EEH
IMO Proper Shipping Name: CHLOROFORM
IMO Regulations Page Number: 6103
IMO UN Number: 1888
IMO UN Class: 6.1
IMO Subsidiary Risk Label: -
IATA PSN Code: GJO
IATA UN ID Number: 1888
IATA Proper Shipping Name: CHLOROFORM
IATA UN Class: 6.1
IATA Label: TOXIC *
AFI PSN Code: GJO
AFI Prop. Shipping Name: CHLOROFORM
AFI Class: 6.1
AFI ID Number: UN1888
AFI Pack Group: II
AFI Label: POISON
AFI Special Prov: N36
AFI Basic Pac Ref: 10-9
Additional Trans Data: DOT RQ:5000 LBS.

==========

Disposal Data

==========

Disposal Data Review Date: 88229
Rec # For This Disp Entry: 01
Tot Disp Entries Per NSN: 001
Landfill Ban Item: YES
Disposal Supplemental Data: MSDS FROM MFR DATED 14NOV85,CONFORMS TO OSHA HAZ COMM STD; VAP PRESSURE AT 10.4C; WARNING! POSSIBLE CANCER HAZARD ON TESTS WITH LABORATORY ANIMALS AS DEFINED BY IARC,MAK,NIOSH,NTP & ACGIH. IN CASE OF ACCIDENTAL EXPOSURE OR DISCHARGE, CONSULT HEALTH AND SAFETY FILE FOR PRECAUTIONS.
1st EPA Haz Wst Code New: U044
1st EPA Haz Wst Name New: CHLOROFORM; TRICHLOROMETHANE
1st EPA Haz Wst Char New: TOXIC (T)
1st EPA Acute Hazard New: NO

==========

Label Data

==========

Label Required: YES
Label Status: F
Special Hazard Precautions: POISONOUS; MAY BE FATAL IF INHALED, SWALLOWED OR ABSORBED THROUGH SKIN. CONTACT MAY CAUSE BURNS TO SKIN AND EYES. RUNOFF FROM FIRE CONTROL OR DILUTION WATER MAY GIVE OFF POISONOUS GASES AND CAUSE WATER POLLUTION. FIRE MAY PRODUCE IRRITATING OR POISONOUS GASES.
Label Name: MALLINCKRODT INC. SCIENCE PRODUCTS DIVISION
Label Street: PARIS BYPASS
Label P.O. Box: M
Label City: PARIS
Label State: KY
Label Zip Code: 40361
Label Country: US
Label Emergency Number: 314-982-5000

==========

URL for this msds http://hazard.com. If you wish to change, add to, or delete information in this archive please sent updates to dan@hazard.com.

LIQUID AIR -- PHOSGENE
MATERIAL SAFETY DATA SHEET
FSC: 6810
NIIN: 00F002675
Manufacturer's CAGE: 18260
Part No. Indicator: A
Part Number/Trade Name: PHOSGENE

General Information

Company's Name: LIQUID AIR CORPORATION
Company's Emerg Ph #: (800) 231-1366
Record No. For Safety Entry: 001
Tot Safety Entries This Stk#: 001
Date MSDS Prepared: 01JAN87
Safety Data Review Date: 28FEB86
MSDS Serial Number: BBLMB

Ingredients/Identity Information

Proprietary: YES
Ingredient: PROPRIETARY
Ingredient Sequence Number: 01

Physical/Chemical Characteristics

Appearance And Odor: COLORLESS GAS WITH SWEET ODOR.
Boiling Point: 45.6F
Vapor Pressure (MM Hg/70 F): 22.
Vapor Density (Air=1): .255
Specific Gravity: 3.42
Solubility In Water: DECOMPOSES

Fire and Explosion Hazard Data

Flash Point: N/A
Lower Explosive Limit: N/A
Upper Explosive Limit: N/A
Extinguishing Media: NONFLAMMABLE
Special Fire Fighting Proc: N/A
Unusual Fire And Expl Hazrds: N/A

Reactivity Data

Stability: YES
Cond To Avoid (Stability): TEMPERATURES ABOVE 572F
Materials To Avoid: WATER, AMMONIA, PRIMARY AMINES,
Hazardous Decomp Products: CO, CHLORINE
Hazardous Poly Occur: NO

Health Hazard Data

Signs/Symptoms Of Overexp: INHALATION: CHOKING/COUGHING/TIGHTNESS OF THE CHEST/BREATH/LACRYMATION/EVENTUAL CYANOSIS.
Emergency/First Aid Proc: INHALATION: UNCONSCIOUS PERSONS SHOULD BE ASSISTED TO AN UNCONTAMINATED AREA/INHALE FRESH AIR/GIVEN OXYGEN. KEEP THE VICTIM WARM/QUIET. CALL PHYSICIAN. _

Precautions for Safe Handling and Use

Steps If Matl Released/Spill: EVACUATE ALL PERSONNEL FROM AFFECTED AREA. USE APPROPRIATE PROTECTIVE EQUIPMENT. IF AK IS IN USER'S EQUIPMENT, BE CERTAIN TO PURGE PIPING WITH AN INERT GAS IOR TO ATTEMPTING REPAIRS.
Waste Disposal Method: DON'T ATTEMPT TO DISPOSE OF RESIDUAL OR UNUSED QUANTITES. RETURN IN THE SHIPPING CONTAINER PROPERLY LABELED, WITH ANY VALVE OUTLET PLUGS OR CAPS SECURED AND VALVE PROTECTION CAP IN PLACE TO LIQUID AIR CORPORATION FOR PROPER DISPOSAL.
Precautions-Handling/Storing: PROTECT CYLINDERS FROM PHYSICAL DAMAGE. STORE IN COOL, DRY, WELL-VENTILATED AREA AWAY FROM HEALY TRAFFICKED AREAS. DON'T STORED ABOVE 130F.
Other Precautions: USE ONLY IN WELL-VENTILATED AREAS. VALVE PROTECTION CAPS AND VALVE OUTLET THREADED PLUGS MUST REMAIN IN PLACE UNLESS CONTAIN IS SECURED WITH VALVE OUTLET PIPED TO USE POINT.

Control Measures

Respiratory Protection: POSITIVE PRESSURE AIR LINE WITH MASK, SCBA FOR EMERGENCY USE.
Ventilation: HOOD WITH FORCED VENTILATION
Protective Gloves: RUBBER OR TEFLO
Eye Protection: GOGGLES/GLASSES/FACESHIEL
Other Protective Equipment: SAFETY SHOES/SHOWER/EYEWASH.
Suppl. Safety & Health Data: ONE CALIFORNIA PLAZA, SUITE 350/2121 N. CALIFORNIA BLVD/WALNUT CREEK, CALIFORNIA 94596. MOLECULAR WEIGHT: 98.91

Transportation Data

Disposal Data

Disposal Data Review Date: 88320
Rec # For This Disp Entry: 01
Tot Disp Entries Per NSN: 001
Landfill Ban Item: YES
Disposal Supplemental Data: ONE CALIFORNIA PLAZA, SUITE 350/2121 N. CALIFORNIA BLVD/WALNUT CREEK, CALIFORNIA 94596. MOLECULAR WEIGHT: 98.91 IN CASE OF ACCIDENTAL EXPOSURE OR DISCHARGE, CONSULT HEALTH AND SAFETY FILE FOR PRECAUTIONS.
1st EPA Haz Wst Code New: P095
1st EPA Haz Wst Name New: PHOSGENE; CARBONYL CHLORIDE
1st EPA Haz Wst Char New: ACUTELY TOXIC (H)
1st EPA Acute Hazard New: YES

Label Data

Label Required: YES
Label Status: G
Common Name: PHOSGENE
Special Hazard Precautions: INHALATION: CHOKING/COUGHING/ TIGHTNESS OF THE CHEST/BREATH/LACRYMATION/EVENTUAL CYANOSIS.
Label Name: LIQUID AIR CORPORATION
Label Emergency Number: (800) 231-1366

URL for this msds http://hazard.com. If you wish to change, add to, or delete information in this archive please sent updates to dan@hazard.com.

cyanogen chloride

Synonyms

- chlorine cyanide

Formula

- CAS Format: CClN
- Structural: CNCl

Physical Data

- Molecular Weight: 61
- Melting point °C : -6
- Boiling point °C : 13.8
- Solubility in water at 20°C: soluble

Registry Numbers

- Chemical Abstracts: 506-77-4
- NFPA Ratings
  - Health: 3
  - Flammability:
  - Reactivity:
- DOT
  - 1589

Click on DOT number to retrieve safety guide.

DOT recommendations for initial isolation and protection distances.

For small spills, first isolate for 95 meters in all directions. Then protect persons downwind for a distanceof 0.5 kilometers during the day and for a distance of 2.1 kilometers at night.

For large spills, first isolate for 305 meters in all directions. Then protect persons downwind for a distanceof 1.8 kilometers during the day and for a distance of 7.9 kilometers at night.

DescriptionHighly irritating and poisonous gas.

Incompatabilitiesacids

BOUGHT ACCORDING TO SPECIFICATION – MIL-C-10664,CHLOROPICRIN,TECHNICAL - CHLOROPICRIN,TECHNICAL
MATERIAL SAFETY DATA SHEET
FSC: 6810
NIIN: 002347369
Manufacturer's CAGE: 81349
Part No. Indicator: A
Part Number/Trade Name: MIL-C-10664,CHLOROPICRIN,TECHNICAL

General Information

Item Name: CHLOROPICRIN,TECHNICAL
Company's Name: BOUGHT ACCORDING TO SPECIFICATION
Record No. For Safety Entry: 001
Tot Safety Entries This Stk#: 001
Date MSDS Prepared: 01JAN85
Safety Data Review Date: 14NOV79
MSDS Serial Number: BDLLH
Specification Number: MIL-C-10664
Hazard Characteristic Code: T2
Unit Of Issue: BT
Unit Of Issue Container Qty: 1 LB

Ingredients/Identity Information

Proprietary: NO
Ingredient: CHLOROPICRIN (TRICHLORONITROMETHANE)
Ingredient Sequence Number: 01
Percent: 98
NIOSH (RTECS) Number: PB6300000
CAS Number: 76-06-2
OSHA PEL: 0.1 PPM
ACGIH TLV: 0.1PPM; 9192

Physical/Chemical Characteristics

Fire and Explosion Hazard Data

Reactivity Data

Health Hazard Data

Precautions for Safe Handling and Use

Control Measures

Transportation Data

Transportation Action Code: C
Trans Data Review Date: 95335

DOT PSN Code: DIE
DOT Symbol: + *
DOT Proper Shipping Name: CHLOROPICRIN *
DOT Class: 6.1 *
DOT ID Number: UN1580 *
DOT Pack Group: I *
DOT Label: POISON *
IMO PSN Code: EGL
IMO Proper Shipping Name: CHLOROPICRIN *
IMO Regulations Page Number: 6108 *
IMO UN Number: 1580 *
IMO UN Class: 6.1 *
IMO Subsidiary Risk Label: - *
IATA PSN Code: GOJ
IATA UN ID Number: 1580 *
IATA UN Class: 6.1 *
AFI PSN Code: GOJ
AFI Symbols: T *
AFI Prop. Shipping Name: CHLOROPICRIN *
AFI Class: 6.1 *
AFI ID Number: UN1580 *
AFI Pack Group: I *
AFI Label: POISON *
AFI Special Prov: 2 *
AFI Basic Pac Ref: A10.7 *

Disposal Data

Label Data

Label Required: YES
Label Status: G
Common Name: MIL-C-10664,CHLOROPICRIN,TECHNICAL
Label Name: BOUGHT ACCORDING TO SPECIFICATION

URL for this msds http://hazard.com. If you wish to change, add to, or delete information in this archive please sent updates to dan@hazard.com.

ALDRICH CHEMICAL -- BENZONITRILE, 99%, 8895-9
MATERIAL SAFETY DATA SHEET
NSN: 681000N037938
Manufacturer's CAGE: 60928
Part No. Indicator: A
Part Number/Trade Name: BENZONITRILE, 99%, 8895-9

General Information

Company's Name: ALDRICH CHEMICAL CO
Company's P. O. Box: 355
Company's City: MILWAUKEE
Company's State: WI
Company's Country: US
Company's Zip Code: 53201
Company's Emerg Ph #: 414-273-3850
Company's Info Ph #: 414-273-3850
Record No. For Safety Entry: 001
Tot Safety Entries This Stk#: 001
Status: SMJ
Date MSDS Prepared: 08JAN92
Safety Data Review Date: 17DEC92
MSDS Serial Number: BQVJM
Hazard Characteristic Code: NK

Ingredients/Identity Information

Proprietary: NO
Ingredient: BENZONITRILE; (BENZENE, CYANO-) (SARA III)
Ingredient Sequence Number: 01
Percent: 99
NIOSH (RTECS) Number: DI2450000
CAS Number: 100-47-0
OSHA PEL: NOT APPLICABLE
ACGIH TLV: NOT APPLICABLE

Physical/Chemical Characteristics

Appearance And Odor: COLORLESS LIQUID.
Boiling Point: 376F,191C
Melting Point: 9F,-13C
Specific Gravity: 1.010

Fire and Explosion Hazard Data

Flash Point: 161F,72C
Extinguishing Media: WATER SPRAY, CARBON DIOXIDE, DRY CHEMICAL POWDER OR APPROPRIATE FOAM.
Special Fire Fighting Proc: COMBUSTIBLE. WEAR NIOSH/MSHA APPROVED SCBA AND FULL PROTECTIVE EQUIPMENT (FP N).
Unusual Fire And Expl Hazrds: EMITS TOXIC FUMES UNDER FIRE CONDITIONS.

Reactivity Data

Stability: YES
Cond To Avoid (Stability): NONE SPECIFIED BY MANUFACTURER.
Materials To Avoid: STRONG ACIDS, STRONG BASES, STRONG OXIDIZING AGENTS, STRONG REDUCING AGENTS.
Hazardous Decomp Products: THERMAL DECOMPOSITION MAY PRODUCE CARBON MONOXIDE, CARBON DIOXIDE, AND NITROGEN OXIDES.
Hazardous Poly Occur: NO
Conditions To Avoid (Poly): NOT RELEVANT.

Health Hazard Data

LD50-LC50 Mixture: NONE SPECIFIED BY MANUFACTURER.
Route Of Entry - Inhalation: YES
Route Of Entry - Skin: YES
Route Of Entry - Ingestion: YES
Health Haz Acute And Chronic: MAY BE HARMFUL BY INHALATION, INGESTION, OR SKIN ABSORPTION. CAUSES SEVERE EYE IRRITATION. CAUSES SKIN IRRITATION.
Carcinogenicity - NTP: NO
Carcinogenicity - IARC: NO
Carcinogenicity - OSHA: NO
Explanation Carcinogenicity: NOT RELEVANT.
Signs/Symptoms Of Overexp: SEE HEALTH HAZARDS.
Med Cond Aggravated By Exp: NONE SPECIFIED BY MANUFACTURER.
Emergency/First Aid Proc: EYES: SHOULD BE TREATED BY IMMED & PROLONGED IRRIGATION WITH COPIOUS AMTS OF WATER FOR AT LEAST 15 MINS. SEEK MED ADVICE. SKIN: IMMED WASH WITH SOAP AND COPIOUS AMTS OF WATER. REMOVE AND WASH CONTAMD CLTHG PROMPTLY. INHAL: REMOVE TO FRESH AIR. IF NOT BRTHG GIVE WASH OUT MOUTH WITH WATER PROVIDED PERSON IS CONSCIOUS. CALL PHYS.

Precautions for Safe Handling and Use

Steps If Matl Released/Spill: EVACUATE AREA. WEAR NIOSH/MSHA APPROVED SCBA, RUBBER BOOTS AND HEAVY RUBBER GLOVES. ABSORB ON SAND/VERMICULITE AND PLACE IN CLOSED CONTAINERS FOR DISPOSAL. VENTILATE AREA AND WASH SPILL SITE AFTER MATERIAL PICKUP IS COMPLETE.
Neutralizing Agent: NONE SPECIFIED BY MANUFACTURER.
Waste Disposal Method: THIS COMBUSTIBLE MATERIAL MAY BE BURNED IN A CHEMICAL INCINERATOR EQUIPPED WITH AN AFTERBURNER AND SCRUBBER. DISPOSE OF IN ACCORDANCE WITH FEDERAL, STATE, AND LOCAL REGULATIONS (FP N).
Precautions-Handling/Storing: COMBUSTIBLE. KEEP TIGHTLY CLSD. KEEP AWAY FROM HEAT & OPEN FLAME. STORE IN A COOL DRY PLACE. DO NOT BREATHE VAP. DO NOT GET IN EYES, ON SKIN,ON CLTHG.
Other Precautions: HARMFUL LIQUID. SEVERE EYE IRRITANT. HARMFUL BY INHALATION, IN CONTACT WITH SKIN AND IF SWALLOWED. RISK OF SERIOUS DAMAGE TO EYES. IF YOU FEEL UNWELL, SEEK MEDICAL ADVICE (SHOW LABEL WHERE POSSIBLE). TAKE OFF IMMED ALL CONTAMD CLOTHING.

Control Measures

Respiratory Protection: WEAR APPROPRIATE NIOSH/MSHA APPROVED RESPIRATOR.
Ventilation: MECHANICAL EXHAUST REQUIRED.
Protective Gloves: CHEMICAL-RESISTANT GLOVES.
Eye Protection: CHEMICAL WORKERS GOGGLES (FP N).
Other Protective Equipment: OTHER PROTECTIVE CLOTHING. SAFETY SHOWER AND EYE BATH.
Work Hygienic Practices: DO NOT BREATHE VAPOR. DO NOT GET IN EYES, ON SKIN, ON CLOTHING. WASH THOROUGHLY AFTER HANDLING.
Suppl. Safety & Health Data: NONE SPECIFIED BY MANUFACTURER.

Transportation Data

Disposal Data

Label Data

Label Required: YES
Technical Review Date: 17DEC92
Label Date: 16DEC92
Label Status: G
Common Name: BENZONITRILE, 99%, 8895-9
Chronic Hazard: NO

Signal Word: WARNING!
Acute Health Hazard-Slight: X
Contact Hazard-Slight: X
Fire Hazard-Moderate: X
Reactivity Hazard-None: X
Special Hazard Precautions: COMBUSTIBLE LIQUID. AVOID HEAT AND OPEN FLAME.
ACUTE: INHALATION, INGESTION OR SKIN ABSORPTION MAY BE HARMFUL. EYE CONTACT
NONE LISTED BY MANUFACTURER.
Protect Eye: Y
Protect Skin: Y
Protect Respiratory: Y
Label Name: ALDRICH CHEMICAL CO
Label P.O. Box: 355
Label City: MILWAUKEE
Label State: WI
Label Zip Code: 53201
Label Country: US
Label Emergency Number: 414-273-3850

(This page intentionally left blank.)

Fluka

Fluka Chemical Corp.
980 South Second Street
Ronkonkoma, New York 11779-7238

Phone 516-467-0980
Telex 96-7807
Fax 516-467-0663

ATTN: SAFETY DIRECTOR
SCI TECH
1311 CONTINENTAL DRIVE
SUITE G
ABINGDON MD 21009-2339

EMERGENCY PHONE 1-516-467-3535

DATE: 06/02/94
CUST#: 01 011768
PO#: 0694104216

MATERIAL SAFETY DATA SHEET

SECTION 1. - - - - - - - - - - CHEMICAL IDENTIFICATION- - - - - - - - - -

PRODUCT #: 63320 NAME: DIETHYL MALONATE

SECTION 2. - - - - - COMPOSITION/INFORMATION ON INGREDIENTS - - - - - -

CAS #:105-53-3
MF: C7H12O4

SYNONYMS
CARBETHOXYACETIC ESTER * DICARBETHOXYMETHANE * DIETHYL MALONATE * DIETHYL PROPANEDIOATE * ETHYL MALONATE * MALONIC ESTER * METHANEDICARBOXYLIC ACID, DIETHYL ESTER * PROPANEDIOIC ACID, DIETHYL ESTER *

SECTION 3. - - - - - - - - - - HAZARDS IDENTIFICATION - - - - - - - - -

EL PRECAUTIONARY STATEMENTS
IRRITANT
IRRITATING TO EYES, RESPIRATORY SYSTEM AND SKIN.
IN CASE OF CONTACT WITH EYES, RINSE IMMEDIATELY WITH PLENTY OF WATER AND SEEK MEDICAL ADVICE.
WEAR SUITABLE PROTECTIVE CLOTHING.

SECTION 4. - - - - - - - - - - FIRST-AID MEASURES- - - - - - - - - - -

IN CASE OF CONTACT, IMMEDIATELY WASH SKIN WITH SOAP AND COPIOUS AMOUNTS OF WATER.
IN CASE OF CONTACT, IMMEDIATELY FLUSH EYES WITH COPIOUS AMOUNTS OF WATER FOR AT LEAST 15 MINUTES.
IF INHALED, REMOVE TO FRESH AIR. IF NOT BREATHING GIVE ARTIFICIAL RESPIRATION. IF BREATHING IS DIFFICULT, GIVE OXYGEN.
IF SWALLOWED, WASH OUT MOUTH WITH WATER PROVIDED PERSON IS CONSCIOUS. CALL A PHYSICIAN.
REMOVE AND WASH CONTAMINATED CLOTHING PROMPTLY.

SECTION 5. - - - - - - - - - - FIRE FIGHTING MEASURES - - - - - - - - - -

EXTINGUISHING MEDIA
CARBON DIOXIDE, DRY CHEMICAL POWDER OR APPROPRIATE FOAM.
ECIAL FIREFIGHTING PROCEDURES
WEAR SELF-CONTAINED BREATHING APPARATUS AND PROTECTIVE CLOTHING TO

CONTINUED ON NEXT PAGE

Fluka

Fluka Chemical Corp
980 South Second Street
Ronkonkoma New York 11779-7238

Phone 516-467-0980
Telex 96-7807
Fax 516-467-0663

MATERIAL SAFETY DATA SHEET

CUST#: 0-1 0-11768
PO#: 0694104216

PRODUCT #: 63320 NAME: DIETHYL MALONATE
MF: C7H1 2O4

PREVENT CONTACT WITH SKIN AND EYES.

UNUSUAL FIRE AND EXPLOSIONS HAZARDS
EMITS TOXIC FUMES UNDER FIRE CONDITIONS.

SECTION 6. - - - - - - - - - ACCIDENTAL RELEASE MEASURES- - - - - - - - -

WEAR RESPIRATOR, CHEMICAL SAFETY GOGGLES, RUBBER BOOTS AND HEAVY RUBBER GLOVES.
ABSORB ON SAND OR VERMICULITE AND PLACE IN CLOSED CONTAINERS FOR DISPOSAL.
VENTILATE AREA AND WASH SPILL SITE AFTER MATERIAL PICKUP IS COMPLETE.

ECTION 7. - - - - - - - - - - HANDLING AND STORAGE- - - - - - - - - - -

REFER TO SECTION 8.

SECTION 8. - - - - - - EXPOSURE CONTROLS/PERSONAL PROTECTION- - - - - -

CHEMICAL SAFETY GOGGLES.
COMPATIBLE CHEMICAL-RESISTANT GLOVES.
NIOSH/MSHA-APPROVED RESPIRATOR.
SAFETY SHOWER AND EYE BATH.
MECHANICAL EXHAUST REQUIRED.
DO NOT BREATHE VAPOR.
AVOID CONTACT WITH EYES, SKIN AND CLOTHING.
AVOID PROLONGED OR REPEATED EXPOSURE.
WASH THOROUGHLY AFTER HANDLING.
IRRITANT.
KEEP TIGHTLY CLOSED.
STORE IN A COOL DRY PLACE.

SECTION 9. - - - - - - - PHYSICAL AND CHEMICAL PROPERTIES - - - - - - -

APPEARANCE AND ODOR
LIQUID.
BOILING POINT: 199 C
MELTING POINT: -51 C TO -50 C
FLASHPOINT 212 F

CONTINUED ON NEXT PAGE

Fluka

Fluka Chemical Corp.
980 South Second Street
Ronkonkoma, New York 11779-7238

Phone 516-467-0980
Telex 96-7807
Fax 516-467-0663

CUST#: 0-1 0-11768
PO#: 0694104216

PRODUCT #: 63320 NAME: DIETHYL MALONATE
MF: C7H1204

VAPOR PRESSURE: 99C 1MM 40 C
VAPOR DENSITY: 5.52
SPECIFIC GRAVITY: 1.055

SECTION 10. - - - - - - - - - -STABILITY AND REACTIVITY - - - - - - - - - -

INCOMPATIBILITIES
ACIDS
BASES
OXIDIZING AGENTS
REDUCING AGENTS
STORE AWAY FROM HEAT AND DIRECT SUNLIGHT.
HAZARDOUS COMBUSTION OR DECOMPOSITION PRODUCTS
TOXIC FUMES OF:
CARBON MONOXIDE, CARBON DIOXIDE

SECTION 11. - - - - - - - - - - TOXICOLOGICAL INFORMATION - - - - - - - -

ACUTE EFFECTS
MAY BE HARMFUL BY INHALATION, INGESTION, OR SKIN ABSORPTION.
VAPOR OR MIST IS IRRITATING TO THE EYES, MUCOUS MEMBRANES AND UPPER RESPIRATORY TRACT.
CAUSES SKIN IRRITATION.
TO THE BEST OF OUR KNOWLEDGE, THE CHEMICAL, PHYSICAL, AND TOXICOLOGICAL PROPERTIES HAVE NOT BEEN THOROUGHLY INVESTIGATED.
ECS NO: 000700000
MALONIC ACID, DIETHYL ESTER
IRRITATION DATA
SKN-RBT 500 MG/24H MLD FCTXAV 14,745,76
TOXICITY DATA
ORL-RAT LD50:15 GM/KG AIHAAP 30,470,69
ORL-MUS LD50:6400 MG/KG BIJOAK 34,1196,40
ONLY SELECTED REGISTRY OF TOXIC EFFECTS OF CHEMICAL SUBSTANCES (RTECS) DATA IS PRESENTED HERE. SEE ACTUAL ENTRY IN RTECS FOR COMPLETE INFORMATION.

SECTION 12. - - - - - - - - - - ECOLOGICAL INFORMATION - - - - - - - - - -
DATA NOT YET AVAILABLE.

CONTINUED ON NEXT PAGE

Fluka

Fluka Chemical Corp.
980 South Second Street
Ronkonkoma, New York 11779-7238

Phone 516-467-0980
Telex 96-7807
Fax 516-467-0663

MATERIAL SAFETY DATA SHEET

CUST#: 0-1 0-11768
PO#: 0694104216

PRODUCT #: 63320 NAME: DIETHYL MALONATE
MF: C7H1204

SECTION 13. - - - - - - - - - - DISPOSAL CONSIDERATIONS - - - - - - - - - -

DISSOLVE OR MIX THE MATERIAL WITH A COMBUSTIBLE SOLVENT AND BURN IN A CHEMICAL INCINERATOR EQUIPPED WITH AN AFTERBURNER AND SCRUBBER. OBSERVE ALL FEDERAL, STATE AND LOCAL ENVIRONMENTAL REGULATIONS.

SECTION 14. - - - - - - - - - - - TRANSPORT INFORMATION - - - - - - - - - -

CONTACT FLUKA CHEMICAL COMPANY FOR TRANSPORTATION INFORMATION.

SECTION 15. - - - - - - - - - - REGULATORY INFORMATION - - - - - - - - - - -

REVIEWS, STANDARDS, AND REGULATIONS
NOES 1983: HZD X4574; NIS 3; TNF 78; NOS 7; TNE 5363; TFE 916
EPA TSCA CHEMICAL INVENTORY, JUNE 1993

SECTION 16. - - - - - - - - - - - OTHER INFORMATION- - - - - - - - - - - -

THE ABOVE INFORMATION IS BELIEVED TO BE CORRECT BUT DOES NOT PURPORT TO BE ALL INCLUSIVE AND SHALL BE USED ONLY AS A GUIDE. FLUKA SHALL NOT BE HELD LIABLE FOR ANY DAMAGE RESULTING FROM HANDLING OR FROM CONTACT WITH THE ABOVE PRODUCT. SEE REVERSE SIDE OF INVOICE OR PACKING SLIP FOR A ADDITIONAL TERMS AND CONDITIONS OF SALE.

COPYRIGHT 1994 FLUKA CHEMICAL CORP.
LICENSE GRANTED TO MAKE UNLIMITED PAPER COPIES FOR INTERNAL USE ONLY.

REVISED: 09 May 1995

ALDRICH CHEMICAL CO., INC.

PHONE: (414) 273-3850

MATERIAL SAFETY DATA SHEET

SECTION I - CHEMICAL IDENTIFICATION

MANUFACTURER'S NAME: Aldrich Chemical Co., Inc.

MANUFACTURER'S ADDRESS:
Aldrich Chemical Co., Inc.
P.O. BOX 355
MILWAUKEE, WISCONSIN 53201

PRODUCT #: 11236-4

CHEMICAL NAME AND SYNONYMS:

Ethyl Heptanoate, 99%

SECTION II - COMPOSITION/INFORMATION ON INGREDIENTS

CAS #: 106-30-9
MF: C9H1802

SYNONYMS: cognac oil, enanthylic ether, ethyl enanthate, ethyl heptanoate, ethyl n-heptanoate, ethyl heptoate, ethyl heptylate, ethyl oenanthate, ethyl oenanthylate, oenanthic ether

SECTION III - HAZARDS IDENTIFICATION

LABEL PRECAUTIONARY STATEMENTS: Irritant. Irritating to eyes, respiratory system and skin. Combustible. In case of contact with eyes, rinse immediately with plenty of water and seek medical advice. Wear suitable protective clothing.

SECTION IV - FIRST-AID MEASURES

In case of contact, immediately flush eyes with copious amounts of water for at least 15 minutes. In case of contact, immediately wash skin with soap and copious amounts of water. If inhaled, remove to fresh air. If not breathing, give artificial respiration. If breathing is difficult, give oxygen. If swallowed, wash out mouth with water provided person is conscious. Call a physician. Wash contaminated clothing before reuse.

SECTION V - FIRE FIGHTING MEASURES

EXTINGUISHING MEDIA: Water Spray. Carbon dioxide, dry chemical powder or appropriate foam.

SPECIAL FIREFIGHTING PROCEDURES: Wear self-contained breathing apparatus and protective clothing. Prevent contact with skin and eyes. Combustible liquid.

UNUSUAL FIRE AND EXPLOSIONS HAZARDS: Emits toxic fumes under fire conditions.

SECTION VI - ACCIDENTAL RELEASE MEASURES

Wear respirator, chemical safety goggles, rubber boots and heavy rubber gloves. Cover with dry lime or soda ash, pick-up, keep in a closed container and hold for waste disposal. Ventilate area and wash spill site after material pickup is complete.

SECTION VII - HANDLING AND STORAGE

Refer to Section 8.

SECTION VIII - EXPOSURE CONTROLS/PERSONAL PROTECTION

Chemical Safety Goggles
Compatible Chemical-Resistant Gloves
NIOSH/MSHA-Approved Respirator
Safety Shower and Eye Bath
Mechanical Exhaust Required
Do Not Breathe Vapor
Avoid Contact with Eyes, Skin and Clothing
Wash Thoroughly After Handling
Irritant
Keep Tightly Closed
Keep Away From Heat and Open Flame
Store in a Cool Dry Place

SECTION IX - PHYSICAL AND CHEMICAL PROPERTIES

APPEARANCE AND ODOR: Colorless liquid

BOILING POINT: 188°C to 189°C

MELTING POINT: -66°C

FLASHPOINT: 151°F (66°C)

SPECIFIC GRAVITY: 0.868

SECTION X - STABILITY AND REACTIVITY

INCOMPATIBILITIES: Strong oxidizing agents, strong bases

HAZARDOUS COMBUSTION OR DECOMPOSITION PRODUCTS: Toxic fumes of carbon monoxide, carbon dioxide

SECTION XI - TOXICOLOGICAL INFORMATION

ACUTE EFFECTS: May be harmful by inhalation, ingestion, or skin absorption. Vapor or mist is irritating to the eyes, mucous membranes and upper respiratory tract. Causes skin irritation. To the best of our knowledge, the chemical, physical, and toxicological properties have not been thoroughly investigated.

RTECS NO: MJ2087000
Heptanoic acid, ethyl ester

TOXICITY DATA: ORL-RAT LD50:>34640 MG/KG FCTXAV 2,327,64
SKN-RBT LD50:>5 GM/KG FCTXAV 19,247,81
Only selected registry of toxic effects of chemical substances (RTECS) data is presented here. See actual entry in RTECS for complete information.

SECTION XII - ECOLOGICAL INFORMATION

DATA NOT YET AVAILABLE.

SECTION XIII - DISPOSAL CONSIDERATIONS

This combustible material may be burned in a chemical incinerator equipped with an afterburner and scrubber. Observe all federal, state and local environmental regulations.

SECTION XIV - TRANSPORT INFORMATION

Contact Aldrich Chemical Company for transportation information.

SECTION XV - REGULATORY INFORMATION

REVIEWS, STANDARDS, AND REGULATIONS:
NOHS 1974: HZD 83911; NIS 1; TNF 5: NOS 3: TNE 38
NOES 1983: HZD 83911: NIS 10: TNF 1486: NOS 30: TNE 15729: TFE 3573
EPA TSCA CHEMICAL INVENTORY, JUNE 1993

SECTION XVI - OTHER INFORMATION

The above information is believed to be correct but does not purport to be all inclusive and shall be used only as a guide. Aldrich shall not be held liable for any damage resulting from handling or from contact with the above product. See reverse side of invoice or packing slip for additional terms and conditions of sale.

Copyright 1995 Aldrich Chemical Co., Inc.
License granted to make unlimited paper copies for internal use only.

(This page intentionally left blank.)

ANNEX D

HAZARDOUS WASTE MANIFEST FORMS AND INSTRUCTIONS AND OTHER TRANSPORTATION FORMS

ANNEX D

HAZARDOUS WASTE MANIFEST FORMS AND INSTRUCTIONS AND OTHER TRANSPORTATION FORMS

The following pages provide the following forms and instructions to support the transportation and storage of chemical warfare materiel (CWM):

- Hazardous Waste Manifest Forms and Instructions
- DD Form 626 Motor Vehicle Inspection
- Interim holding facility (IHF) Inspection Checklist
- DD Form 1911, Materiel Courier Receipt
- DD Form 836, Shipping Paper and Emergency Response Information for Hazardous Materials Transported by Government Vehicles.

(This page intentionally left blank.)

(b) If a waste is hazardous under paragraph (a) of this section and it appears on the amber or red list, it is subject to amber- or red-list requirements respectively;

(c) If a waste is hazardous under paragraph (a) of this section and it does not appear on either amber or red lists, it is subject to red-list requirements.

(d) The appropriate control procedures for hazardous wastes and hazardous waste mixtures are addressed in § 262.82.

(e) The OECD Green List of Wastes (revised May 1994), Amber List of Wastes and Red List of Wastes (both revised May 1993) as set forth in Appendix 3, Appendix 4 and Appendix 5, respectively, to the OECD Council Decision C(92)39/FINAL (Concerning the Control of Transfrontier Movements of Wastes Destined for Recovery Operations) are incorporated by reference. These incorporations by reference were approved by the Director of the Federal Register in accordance with 5 U.S.C. 552(a) and 1 CFR part 51 on July 11, 1996. These materials are incorporated as they exist on the date of the approval and a notice of any change in these materials will be published in the FEDERAL REGISTER. The materials are available for inspection at: the Office of the Federal Register, 800 North Capitol Street, NW., suite 700, Washington, DC; the U.S. Environmental Protection Agency, RCRA Information Center (RIC), 1235 Jefferson-Davis Highway, first floor, Arlington, VA 22203 (Docket # F-94-IEHF-FFFFF) and may be obtained from the Organisation for Economic Co-operation and Development, Environment Direcorate, 2 rue Andre Pascal, 75775 Paris Cedex 16, France.

APPENDIX TO PART 262—UNIFORM HAZARDOUS WASTE MANIFEST AND INSTRUCTIONS (EPA FORMS 8700-22 AND 8700-22A AND THEIR INSTRUCTIONS)

U.S. EPA Form 8700-22

Read all instructions before completing this form.

This form has been designed for use on a 12-pitch (elite) typerwriter; a firm point pen may also be used—press down hard.

Federal regulations require generators and transporters of hazardous waste and owners or operators of hazardous waste treatment, storage, and disposal facilities to use this form (8700-22) and, if necessary, the continuation sheet (Form 8700-22A) for both inter and intrastate transportation.

Federal regulations also require generators and transporters of hazardous waste and owners or operators of hazardous waste treatment, storage and disposal facilities to complete the following information:

* * * * *

Please print or type. (Form designed for use on elite (12-pitch) typewriter.)

Form approved. OMB No. 2050-0039. Expires 9-30-91

UNIFORM HAZARDOUS WASTE MANIFEST

1. Generator's US EPA ID No. | Manifest Document No. | 2. Page 1 of | Information in the shaded areas is not required by Federal law.

3. Generator's Name and Mailing Address | A. State Manifest Document Number | B. State Generator's ID

4. Generator's Phone ( )

5. Transporter 1 Company Name | E. US EPA ID Number | C. State Transporter's ID

6. Transporter 2 Company Name | F. US EPA ID Number | D. Transporter's Phone | E. State Transporter's ID

7. Designated Facility Name and Site Address | G. US EPA ID Number | F. Transporter's Phone | G. State Facility's ID

H. Facility's Phone

GENERATOR

11. US DOT Description (Including Proper Shipping Name, Hazard Class, and ID Number)	12. Containers No.	Type	13. Total Quantity	14. Unit Wt./Vol.	I. Waste No.
a.					
b.					
c.					
d.					

J. Additional Descriptions for Materials Listed Above | K. Handling Codes for Wastes Listed Above

15. Special Handling Instructions and Additional Information

16. **GENERATOR'S CERTIFICATION:** I hereby declare that the contents of this consignment are fully and accurately described above by proper shipping name and are classified, packed, marked, and labeled, and are in all respects in proper condition for transport by highway according to applicable international and national government regulations.

If I am a large quantity generator, I certify that I have a program in place to reduce the volume and toxicity of waste generated to the degree I have determined to be economically practicable and that I have selected the practicable method of treatment, storage, or disposal currently available to me which minimizes the present and future threat to human health and the environment; OR, if I am a small quantity generator, I have made a good faith effort to minimize my waste generation and select the best waste management method that is available to me and that I can afford.

Printed/Typed Name | Signature | Month Day Year

TRANSPORTER

17. Transporter 1 Acknowledgement of Receipt of Materials

Printed/Typed Name | Signature | Month Day Year

18. Transporter 2 Acknowledgement of Receipt of Materials

Printed/Typed Name | Signature | Month Day Year

FACILITY

19. Discrepancy Indication Space

20. Facility Owner or Operator: Certification of receipt of hazardous materials covered by the manifest except as noted in Item 19.

Printed/Typed Name | Signature | Month Day Year

EPA Form 8700-22 (Rev. 9-88) Previous editions are obsolete.

The following statement must be included with each Uniform Hazardous Waste Manifest, either on the form, in the instructions to the form, or accompanying the form:

Public reporting burden for this collection of information is estimated to average: 37 minutes for generators, 15 minutes for transporters, and 10 minutes for treatment, storage and disposal facilities. This includes time for reviewing instructions, gathering data, and completing and reviewing the form. Send comments regarding the burden estimate, including suggestions for reducing this burden, to: Chief, Information Policy Branch, PM-223, U.S. Environmental Protection Agency, 401 M Street SW., Washington, DC 20460; and to the Office of Information and Regulatory Affairs, Office of Management and Budget, Washington, DC 20503.

GENERATORS

Item 1. Generator's U.S. EPA ID Number—Manifest Document Number

Enter the generator's U.S. EPA twelve digit identification number and the unique five digit number assigned to this Manifest (e.g., 00001) by the generator.

Item 2. Page 1 of ——

Enter the total number of pages used to complete this Manifest, i.e., the first page (EPA Form 8700-22) plus the number of Continuation Sheets (EPA Form 8700-22A), if any.

Item 3. Generator's Name and Mailing Address

Enter the name and mailing address of the generator. The address should be the location that will manage the returned Manifest forms.

Item 4. Generator's Phone Number

Enter a telephone number where an authorized agent of the generator may be reached in the event of an emergency.

Item 5. Transporter 1 Company Name

Enter the company name of the first transporter who will transport the waste.

Item 6. U.S. EPA ID Number

Enter the U.S. EPA twelve digit identification number of the first transporter identified in item 5.

Item 7. Transporter 2 Company Name

If applicable, enter the company name of the second transporter who will transport the waste. If more than two transporters are used to transport the waste, use a Continuation Sheet(s) (EPA Form 8700-22A) and list the transporters in the order they will be transporting the waste.

Item 8. U.S. EPA ID Number

If applicable, enter the U.S. EPA twelve digit identification number of the second transporter identified in item 7.

NOTE: If more than two transporters are used, enter each additional transporter's company name and U.S. EPA twelve digit identification number in items 24–27 on the Continuation Sheet (EPA Form 8700-22A). Each Continuation Sheet has space to record two additional transporters. Every transporter used between the generator and the designated facility must be listed.

Item 9. Designated Facility Name and Site Address

Enter the company name and site address of the facility designated to receive the waste listed on this Manifest. The address must be the site address, which may differ from the company mailing address.

Item 10. U.S. EPA ID Number

Enter the U.S. EPA twelve digit identification number of the designated facility identified in item 9.

Item 11. U.S. DOT Description [Including Proper Shipping Name, Hazard Class, and ID Number (UN/NA)]

Enter the U.S. DOT Proper Shipping Name, Hazard Class, and ID Number (UN/NA) for each waste as identified in 49 CFR 171 through 177.

NOTE: If additional space is needed for waste descriptions, enter these additional descriptions in item 28 on the Continuation Sheet (EPA Form 8700-22A).

Item 12. Containers (No. and Type)

Enter the number of containers for each waste and the appropriate abbreviation from Table I (below) for the type of container.

Table I—Types of Containers

DM=Metal drums, barrels, kegs
DW=Wooden drums, barrels, kegs
DF=Fiberboard or plastic drums, barrels, kegs
TP=Tanks portable
TT=Cargo tanks (tank trucks)
TC=Tank cars
DT=Dump truck
CY=Cylinders
CM=Metal boxes, cartons, cases (including roll-offs)
CW=Wooden boxes, cartons, cases
CF=Fiber or plastic boxes, cartons, cases
BA=Burlap, cloth, paper or plastic bags

Item 13. Total Quantity

Enter the total quantity of waste described on each line.

Item 14. Unit (Wt./Vol.)

Enter the appropriate abbreviation from Table II (below) for the unit of measure.

Table II—Units of Measure

G=Gallons (liquids only)
P=Pounds
T=Tons (2000 lbs)
Y=Cubic yards
L=Liters (liquids only)
K=Kilograms
M=Metric tons (1000 kg)
N=Cubic meters

Item 15. Special Handling Instructions and Additional Information

Generators may use this space to indicate special transportation, treatment, storage, or disposal information or Bill of Lading information. States may not require additional, new, or different information in this space. For international shipments, generators must enter in this space the point of departure (City and State) for those shipments destined for treatment, storage, or disposal outside the jurisdiction of the United States.

Item 16. Generator's Certification

The generator must read, sign (by hand), and date the certification statement. If a mode *other than* highway is used, the word "highway" should be lined out and the appropriate mode (rail, water, or air) inserted in the space below. If another mode *in addition to* the highway mode is used, enter the appropriate additional mode (e.g., *and rail*) in the space below.

Primary exporters shipping hazardous wastes to a facility located outside of the United States must add to the end of the first sentence of the certification the following words "and conforms to the terms of the EPA Acknowledgment of Consent to the shipment."

In signing the waste minimization certification statement, those generators who have not been exempted by statute or regulation from the duty to make a waste minimization certification under section 3002(b) of RCRA are also certifying that they have complied with the waste minimization requirements.

Generators may preprint the words, "On behalf of" in the signature block or may hand write this statement in the signature block prior to signing the generator certifications.

NOTE: All of the above information *except* the handwritten signature required in item 16 may be preprinted.

* * * * *

TRANSPORTERS

Item 17. Transporter 1 Acknowledgement of Receipt of Materials

Enter the name of the person accepting the waste on behalf of the first transporter. That person must acknowledge acceptance of the waste described on the Manifest by signing and entering the date of receipt.

Item 18. Transporter 2 Acknowledgement of Receipt of Materials

Enter, if applicable, the name of the person accepting the waste on behalf of the second transporter. That person must acknowledge acceptance of the waste described on the Manifest by signing and entering the date of receipt.

NOTE: International Shipments—Transporter Responsibilities.

Exports—Transporters must sign and enter the date the waste left the United States in item 15 of Form 8700-22.

Imports—Shipments of hazardous waste regulated by RCRA and transported into the United States from another country must upon entry be accompanied by the U.S. EPA Uniform Hazardous Waste Manifest. Transporters who transport hazardous waste into the United States from another country are responsible for completing the Manifest (40 CFR 263.10(c)(1)).

Owners and Operators of Treatment, Storage, or Disposal Facilities

Item 19. Discrepancy Indication Space

The authorized representative of the designated (or alternate) facility's owner or operator must note in this space any significant discrepancy between the waste described on the Manifest and the waste actually received at the facility.

Owners and operators of facilities located in unauthorized States (i.e., the U.S. EPA administers the hazardous waste management program) who cannot resolve significant discrepancies within 15 days of receiving the waste must submit to their Regional Administrator (see list below) a letter with a copy of the Manifest at issue describing the discrepancy and attempts to reconcile it (40 CFR 264.72 and 265.72).

Owners and operators of facilities located in authorized States (i.e., those States that have received authorization from the U.S. EPA to administer the hazardous waste program) should contact their State agency for

information on State Discrepancy Report requirements.

EPA Regional Administrators

Regional Administrator, U.S. EPA Region I, J.F. Kennedy Fed. Bldg., Boston, MA 02203
Regional Administrator, U.S. EPA Region II, 26 Federal Plaza, New York, NY 10278
Regional Administrator, U.S. EPA Region III, 6th and Walnut Sts., Philadelphia, PA 19106
Regional Administrator, U.S. EPA Region IV, 345 Courtland St., NE., Atlanta, GA 30365
Regional Administrator, U.S. EPA Region V, 230 S. Dearborn St., Chicago, IL 60604
Regional Administrator, U.S. EPA Region VI, 1201 Elm Street, Dallas, TX 75270
Regional Administrator, U.S. EPA Region VII, 324 East 11th Street, Kansas City, MO 64106
Regional Administrator, U.S. EPA Region VIII, 1860 Lincoln Street, Denver, CO 80295
Regional Administrator, U.S. EPA Region IX, 215 Freemont Street, San Francisco, CA 94105
Regional Administrator, U.S. EPA Region X, 1200 Sixth Avenue, Seattle, WA 98101

Item 20. Facility Owner or Operator: Certification of Receipt of Hazardous Materials Covered by This Manifest Except as Noted in Item 19

Print or type the name of the person accepting the waste on behalf of the owner or operator of the facility. That person must acknowledge acceptance of the waste described on the Manifest by signing and entering the date of receipt.

Items A-K are not required by Federal regulations for intra- or interstate transportation. However, States may require generators and owners or operators of treatment, storage, or disposal facilities to complete some or all of items A-K as part of State manifest reporting requirements. Generators and owners and operators of treatment, storage, or disposal facilities are advised to contact State officials for guidance on completing the shaded areas of the Manifest.

Please print or type. (Form designed for use on elite (12-pitch) typewriter.) Form Approved OMB No. 2050-0039 Expires 9-30-97

UNIFORM HAZARDOUS WASTE MANIFEST *(Continuation Sheet)*	21. Generator's US EPA ID No.	Manifest Document No.	22. Page — Information in the shaded areas is not required by Federal law

23. Generator's Name	L. State Manifest Document Number
	M. State Generator's ID
24. Transporter ____ Company Name — 25. US EPA ID Number	N. State Transporter's ID
	O. Transporter's Phone
26. Transporter ____ Company Name — 27. US EPA ID Number	P. State Transporter's ID
	Q. Transporter's Phone

28. US DOT Description (Including Proper Shipping Name, Hazard Class, and ID Number)	29 Containers No.	Type	30 Total Quantity	31 Unit Wt./Vol.	R Waste No.
a.					
b.					
c.					
d.					
e.					
f.					
g.					
h.					
i.					

S. Additional Descriptions for Materials Listed Above	T. Handling Codes for Wastes Listed Above

32. Special Handling Instructions and Additional Information

GENERATOR

33. Transporter ____ Acknowledgement of Receipt of Materials		Date
Printed/Typed Name	Signature	Month Day Year
34. Transporter ____ Acknowledgement of Receipt of Materials		Date
Printed/Typed Name	Signature	Month Day Year

TRANSPORTER

FACILITY

35. Discrepancy Indication Space

EPA Form 8700-22A (Rev. 9-88) Previous edition is obsolete.

INSTRUCTIONS—CONTINUATION SHEET, U.S. EPA FORM 8700-22A

Read all instructions before completing this form.

This form has been designed for use on a 12-pitch (elite) typewriter; a firm point pen may also be used—press down hard.

This form must be used as a continuation sheet to U.S. EPA Form 8700-22 if:

- More than two transporters are to be used to transport the waste;
- More space is required for the U.S. DOT description and related information in Item 11 of U.S. EPA Form 8700-22.

Federal regulations require generators and transporters of hazardous waste and owners or operators of hazardous waste treatment, storage, or disposal facilities to use the uniform hazardous waste manifest (EPA Form 8700-22) and, if necessary, this continuation sheet (EPA Form 8700-22A) for both inter- and intrastate transportation.

GENERATORS

Item 21. Generator's U.S. EPA ID Number—Manifest Document Number

Enter the generator's U.S. EPA twelve digit identification number and the unique five digit number assigned to this Manifest (e.g., 00001) as it appears in item 1 on the first page of the Manifest.

Item 22. Page ——

Enter the page number of this Continuation Sheet.

Item 23. Generator's Name

Enter the generator's name as it appears in item 3 on the first page of the Manifest.

Item 24. Transporter —— Company Name

If additional transporters are used to transport the waste described on this Manifest, enter the company name of each additional transporter in the order in which they will transport the waste. Enter after the word "Transporter" the order of the transporter. For example, Transporter 3 Company Name. Each Continuation Sheet will record the names of two additional transporters.

Item 25. U.S. EPA ID Number

Enter the U.S. EPA twelve digit identification number of the transporter described in item 24.

Item 26. Transporter —— Company Name

If additional transporters are used to transport the waste described on this Manifest, enter the company name of each additional transporter in the order in which they will transport the waste. Enter after the word "Transporter" the order of the transporter. For example, Transporter 4 Company Name. Each Continuation Sheet will record the names of two additional transporters.

Item 27. U.S. EPA ID Number

Enter the U.S. EPA twelve digit identification number of the transporter described in item 26.

Item 28. U.S. DOT Description Including Proper Shipping Name, Hazardous Class, and ID Number (UN/NA)

Refer to item 11.

Item 29. Containers (No. and Type)

Refer to item 12.

Item 30. Total Quantity

Refer to item 13.

Item 31. Unit (Wt./Vol.)

Refer to item 14.

Item 32. Special Handling Instructions

Generators may use this space to indicate special transportation, treatment, storage, or disposal information or Bill of Lading information. States are *not* authorized to require additional, new, or different information in this space.

* * * * *

TRANSPORTERS

Item 33. Transporter —— Acknowledgement of Receipt of Materials

Enter the same number of the Transporter as identified in item 24. Enter also the name of the person accepting the waste on behalf of the Transporter (Company Name) identified in item 24. That person must acknowledge acceptance of the waste described on the Manifest by signing and entering the date of receipt.

Item 34. Transporter —— Acknowledgement of Receipt of Materials

Enter the same number as identified in item 26. Enter also the name of the person accepting the waste on behalf of the Transporter (Company Name) identified in item 26. That person must acknowledge acceptance of the waste described on the Manifest by signing and entering the date of receipt.

* * * * *

OWNERS AND OPERATORS OF TREATMENT, STORAGE, OR DISPOSAL FACILITIES

Item 35. Discrepancy Indication Space

Refer to item 19.

Items L–R are not required by Federal regulations for intra- or interstate transportation. However, States may require generators and owners or operators of treatment, storage, or disposal facilities to complete some or all of items L–R as part of State manifest reporting requirements. Generators and owners and operators of treatment, storage, or disposal facilities are advised to contact State officials for guidance on completing the shaded areas of the manifest.

[49 FR 10501, Mar. 20, 1984, as amended at 51 FR 28685, Aug. 8, 1986; 51 FR 35192, Oct. 1, 1986; 53 FR 45091, Nov. 8, 1988]

PART 263—STANDARDS APPLICABLE TO TRANSPORTERS OF HAZARDOUS WASTE

Subpart A—General

Sec.
263.10 Scope.
263.11 EPA identification number.
263.12 Transfer facility requirements.

Subpart B—Compliance With the Manifest System and Recordkeeping

263.20 The manifest system.
263.21 Compliance with the manifest.
263.22 Recordkeeping.

Subpart C—Hazardous Waste Discharges

263.30 Immediate action.
263.31 Discharge clean up.

AUTHORITY: 42 U.S.C. 6906, 6912, 6922, 6923, 6925, 6937, and 6938.

SOURCE: 45 FR 33151, May 19, 1980, unless otherwise noted.

Subpart A—General

§ 263.10 Scope.

(a) These regulations establish standards which apply to persons transporting hazardous waste within the United States if the transportation requires a manifest under 40 CFR part 262.

NOTE: The regulations set forth in parts 262 and 263 establish the responsibilities of generators and transporters of hazardous waste in the handling, transportation, and management of that waste. In these regulations, EPA has expressly adopted certain regulations of the Department of Transportation (DOT) governing the transportation of hazardous materials. These regulations concern, among other things, labeling, marking, placarding, using proper containers, and reporting discharges. EPA has expressly adopted these regulations in order to satisfy its statutory obligation to promulgate regulations which are necessary to protect human health and the environment in the transportation of hazardous waste. EPA's adoption of these DOT regulations ensures consistency with the requirements of DOT and thus avoids the establishment of duplicative or conflicting requirements with respect to these matters. These EPA regulations which apply to both interstate and intrastate transportation of hazardous waste are enforceable by EPA.

DOT has revised its hazardous materials transportation regulations in order to encompass the transportation of hazardous waste and to regulate intrastate, as well as interstate, transportation of hazardous waste. Transporters of hazardous waste are cautioned that DOT's regulations are fully applicable to their activities and enforceable by DOT. These DOT regulations are codified in title 49, Code of Federal Regulations, subchapter C.

EPA and DOT worked together to develop standards for transporters of hazardous waste in order to avoid conflicting requirements. Except for transporters of bulk shipments of hazardous waste by water, a transporter who meets all applicable requirements of 49 CFR parts 171 through 179 and the requirements of 40 CFR 263.11 and 263.31 will be deemed in compliance with this part. Regardless of DOT's action, EPA retains its authority to enforce these regulations.

(b) These regulations do not apply to on-site transportation of hazardous waste by generators or by owners or operators of permitted hazardous waste management facilities.

(c) A transporter of hazardous waste must also comply with 40 CFR part 262, Standards Applicable to Generators of Hazardous Waste, if he:

(1) Transports hazardous waste into the United States from abroad; or

(2) Mixes hazardous wastes of different DOT shipping descriptions by placing them into a single container.

(d) A transporter of hazardous waste subject to the Federal manifesting requirements of 40 CFR part 262, or subject to the waste management standards of 40 CFR part 273, or subject to State requirements analogous to 40 CFR part 273, that is being imported from or exported to any of the countries listed in 40 CFR 262.58(a)(1) for purposes of recovery is subject to this Subpart and to all other relevant requirements of subpart H of 40 CFR part

262, including, but not limited to, 40 CFR 262.84 for tracking documents.

[45 FR 33151, May 19, 1980, as amended at 45 FR 86968, Dec. 31, 1980; 61 FR 16314, Apr. 12, 1996]

EFFECTIVE DATE NOTE: At 61 FR 16314, Apr. 12, 1996, §263.10(d) was added, effective July 11, 1996.

§263.11 EPA identification number.

(a) A transporter must not transport hazardous wastes without having received an EPA identification number from the Administrator.

(b) A transporter who has not received an EPA identification number may obtain one by applying to the Administrator using EPA Form 8700-12. Upon receiving the request, the Administrator will assign an EPA identification number to the transporter.

§263.12 Transfer facility requirements.

A transporter who stores manifested shipments of hazardous waste in containers meeting the requirements of §262.30 at a transfer facility for a period of ten days or less is not subject to regulation under parts 270, 264, 265, and 268 of this chapter with respect to the storage of those wastes.

[45 FR 86968, Dec. 31, 1980, as amended at 48 FR 14294, Apr. 1, 1983; 51 FR 40637, Nov. 7, 1986]

Subpart B—Compliance With the Manifest System and Recordkeeping

§263.20 The manifest system.

(a) A transporter may not accept hazardous waste from a generator unless it is accompanied by a manifest signed in accordance with the provisions of 40 CFR 262.20. In the case of exports other than those subject to subpart H of 40 CFR part 262, a transporter may not accept such waste from a primary exporter or other person if he knows the shipment does not conform to the EPA Acknowledgement of Consent; and unless, in addition to a manifest signed in accordance with the provisions of 40 CFR 262.20, such waste is also accompanied by an EPA Acknowledgement of Consent which, except for shipment by rail, is attached to the manifest (or shipping paper for exports by water (bulk shipment)). For exports of hazardous waste subject to the requirements of subpart H of 40 CFR part 262, a transporter may not accept hazardous waste without a tracking document that includes all information required by 40 CFR 262.84.

(b) Before transporting the hazardous waste, the transporter must sign and date the manifest acknowledging acceptance of the hazardous waste from the generator. The transporter must return a signed copy to the generator before leaving the generator's property.

(c) The transporter must ensure that the manifest accompanies the hazardous waste. In the case of exports, the transporter must ensure that a copy of the EPA Acknowledgment of Consent also accompanies the hazardous waste.

(d) A transporter who delivers a hazardous waste to another transporter or to the designated facility must:

(1) Obtain the date of delivery and the handwritten signature of that transporter or of the owner or operator of the designated facility on the manifest; and

(2) Retain one copy of the manifest in accordance with §263.22; and

(3) Give the remaining copies of the manifest to the accepting transporter or designated facility.

(e) The requirements of paragraphs (c), (d) and (f) of this section do not apply to water (bulk shipment) transporters if:

(1) The hazardous waste is delivered by water (bulk shipment) to the designated facility; and

(2) A shipping paper containing all the information required on the manifest (excluding the EPA identification numbers, generator certification, and signatures) and, for exports, an EPA Acknowledgment of Consent accompanies the hazardous waste; and

(3) The delivering transporter obtains the date of delivery and handwritten signature of the owner or operator of the designated facility on either the manifest or the shipping paper; and

(4) The person delivering the hazardous waste to the initial water (bulk shipment) transporter obtains the date of delivery and signature of the water (bulk shipment) transporter on the

manifest and forwards it to the designated facility; and

(5) A copy of the shipping paper or manifest is retained by each water (bulk shipment) transporter in accordance with § 263.22.

(f) For shipments involving rail transportation, the requirements of paragraphs (c), (d) and (e) do not apply and the following requirements do apply:

(1) When accepting hazardous waste from a non-rail transporter, the initial rail transporter must:

(i) Sign and date the manifest acknowledging acceptance of the hazardous waste;

(ii) Return a signed copy of the manifest to the non-rail transporter;

(iii) Forward at least three copies of the manifest to:

(A) The next non-rail transporter, if any; or,

(B) The designated facility, if the shipment is delivered to that facility by rail; or

(C) The last rail transporter designated to handle the waste in the United States;

(iv) Retain one copy of the manifest and rail shipping paper in accordance with § 263.22.

(2) Rail transporters must ensure that a shipping paper containing all the information required on the manifest (excluding the EPA identification numbers, generator certification, and signatures) and, for exports an EPA Acknowledgment of Consent accompanies the hazardous waste at all times.

NOTE: Intermediate rail transporters are not required to sign either the manifest or shipping paper.

(3) When delivering hazardous waste to the designated facility, a rail transporter must:

(i) Obtain the date of delivery and handwritten signature of the owner or operator of the designated facility on the manifest or the shipping paper (if the manifest has not been received by the facility); and

(ii) Retain a copy of the manifest or signed shipping paper in accordance with § 263.22.

(4) When delivering hazardous waste to a non-rail transporter a rail transporter must:

(i) Obtain the date of delivery and the handwritten signature of the next non-rail transporter on the manifest; and

(ii) Retain a copy of the manifest in accordance with § 263.22.

(5) Before accepting hazardous waste from a rail transporter, a non-rail transporter must sign and date the manifest and provide a copy to the rail transporter.

(g) Transporters who transport hazardous waste out of the United States must:

(1) Indicate on the manifest the date the hazardous waste left the United States; and

(2) Sign the manifest and retain one copy in accordance with § 263.22(c); and

(3) Return a signed copy of the manifest to the generator; and

(4) Give a copy of the manifest to a U.S. Customs official at the point of departure from the United States.

(h) A transporter transporting hazardous waste from a generator who generates greater than 100 kilograms but less than 1000 kilograms of hazardous waste in a calendar month need not comply with the requirements of this section or those of § 263.22 provided that:

(1) The waste is being transported pursuant to a reclamation agreement as provided for in § 262.20(e);

(2) The transporter records, on a log or shipping paper, the following information for each shipment:

(i) The name, address, and U.S. EPA Identification Number of the generator of the waste;

(ii) The quantity of waste accepted;

(iii) All DOT-required shipping information;

(iv) The date the waste is accepted; and

(3) The transporter carries this record when transporting waste to the reclamation facility; and

(4) The transporter retains these records for a period of at least three years after termination or expiration of the agreement.

[45 FR 33151, May 19, 1980, as amended at 45 FR 86973, Dec. 31, 1980; 51 FR 10176, Mar. 24, 1986; 51 FR 28685, Aug. 8, 1986; 61 FR 16315, Apr. 12, 1996]

EFFECTIVE DATE NOTE: At 61 FR 16315, Apr. 12, 1996, § 263.20(a) was revised, effective July

11, 1986. For the convenience of the reader, the superseded text is set out below:

§ 263.20 The manifest system.

(a) A transporter may not accept hazardous waste from a generator unless it is accompanied by a manifest signed in accordance with the provisions of 40 CFR 262.20. In the case of exports, a transporter may not accept such waste from a primary exporter or other person (1) if he knows the shipment does not conform to the EPA Acknowledgment of Consent; and (2) unless, in addition to a manifest signed in accordance with the provisions of 40 CFR 262.20, such waste is also accompanied by an EPA Acknowledgment of Consent which, except for shipment by rail, is attached to the manifest (or shipping paper for exports by water (bulk shipment)).

* * * * *

§ 263.21 Compliance with the manifest.

(a) The transporter must deliver the entire quantity of hazardous waste which he has accepted from a generator or a transporter to:

(1) The designated facility listed on the manifest; or

(2) The alternate designated facility, if the hazardous waste cannot be delivered to the designated facility because an emergency prevents delivery; or

(3) The next designated transporter; or

(4) The place outside the United States designated by the generator.

(b) If the hazardous waste cannot be delivered in accordance with paragraph (a) of this section, the transporter must contact the generator for further directions and must revise the manifest according to the generator's instructions.

§ 263.22 Recordkeeping.

(a) A transporter of hazardous waste must keep a copy of the manifest signed by the generator, himself, and the next designated transporter or the owner or operator of the designated facility for a period of three years from the date the hazardous waste was accepted by the initial transporter.

(b) For shipments delivered to the designated facility by water (bulk shipment), each water (bulk shipment) transporter must retain a copy of the shipping paper containing all the information required in § 263.20(e)(2) for a period of three years from the date the hazardous waste was accepted by the initial transporter.

(c) For shipments of hazardous waste by rail within the United States:

(1) The initial rail transporter must keep a copy of the manifest and shipping paper with all the information required in § 263.20(f)(2) for a period of three years from the date the hazardous waste was accepted by the initial transporter; and

(2) The final rail transporter must keep a copy of the signed manifest (or the shipping paper if signed by the designated facility in lieu of the manifest) for a period of three years from the date the hazardous waste was accepted by the initial transporter.

NOTE: Intermediate rail transporters are not required to keep records pursuant to these regulations.

(d) A transporter who transports hazardous waste out of the United States must keep a copy of the manifest indicating that the hazardous waste left the United States for a period of three years from the date the hazardous waste was accepted by the initial transporter.

(e) The periods of retention referred to in this Section are extended automatically during the course of any unresolved enforcement action regarding the regulated activity or as requested by the Administrator.

[45 FR 33151, May 19, 1980, as amended at 45 FR 86973, Dec. 31, 1980]

Subpart C—Hazardous Waste Discharges

§ 263.30 Immediate action.

(a) In the event of a discharge of hazardous waste during transportation, the transporter must take appropriate immediate action to protect human health and the environment (e.g., notify local authorities, dike the discharge area).

(b) If a discharge of hazardous waste occurs during transportation and an official (State or local government or a Federal Agency) acting within the scope of his official responsibilities determines that immediate removal of the waste is necessary to protect human health or the environment, that official may authorize the removal of

the waste by transporters who do not have EPA identification numbers and without the preparation of a manifest.

(c) An air, rail, highway, or water transporter who has discharged hazardous waste must:

(1) Give notice, if required by 49 CFR 171.15, to the National Response Center (800-424-8802 or 202-426-2675); and

(2) Report in writing as required by 49 CFR 171.16 to the Director, Office of Hazardous Materials Regulations, Materials Transportation Bureau, Department of Transportation, Washington, DC 20590.

(d) A water (bulk shipment) transporter who has discharged hazardous waste must give the same notice as required by 33 CFR 153.203 for oil and hazardous substances.

§ 263.31 Discharge clean up.

A transporter must clean up any hazardous waste discharge that occurs during transportation or take such action as may be required or approved by Federal, State, or local officials so that the hazardous waste discharge no longer presents a hazard to human health or the environment.

PART 264—STANDARDS FOR OWNERS AND OPERATORS OF HAZARDOUS WASTE TREATMENT, STORAGE, AND DISPOSAL FACILITIES

Subpart A—General

Sec.
264.1 Purpose, scope and applicability.
264.2 [Reserved]
264.3 Relationship to interim status standards.
264.4 Imminent hazard action.

Subpart B—General Facility Standards

264.10 Applicability.
264.11 Identification number.
264.12 Required notices.
264.13 General waste analysis.
264.14 Security.
264.15 General inspection requirements.
264.16 Personnel training.
264.17 General requirements for ignitable, reactive, or incompatible wastes.
264.18 Location standards.
264.19 Construction quality assurance program.

Subpart C—Preparedness and Prevention

264.30 Applicability.
264.31 Design and operation of facility.
264.32 Required equipment.
264.33 Testing and maintenance of equipment.
264.34 Access to communications or alarm system.
264.35 Required aisle space.
264.36 [Reserved]
264.37 Arrangements with local authorities.

Subpart D—Contingency Plan and Emergency Procedures

264.50 Applicability.
264.51 Purpose and implementation of contingency plan.
264.52 Content of contingency plan.
264.53 Copies of contingency plan.
264.54 Amendment of contingency plan.
264.55 Emergency coordinator.
264.56 Emergency procedures.

Subpart E—Manifest System, Recordkeeping, and Reporting

264.70 Applicability.
264.71 Use of manifest system.
264.72 Manifest discrepancies.
264.73 Operating record.
264.74 Availability, retention, and disposition of records.
264.75 Biennial report.
264.76 Unmanifested waste report.
264.77 Additional reports.

Subpart F—Releases From Solid Waste Management Units

264.90 Applicability.
264.91 Required programs.
264.92 Ground-water protection standard.
264.93 Hazardous constituents.
264.94 Concentration limits.
264.95 Point of compliance.
264.96 Compliance period.
264.97 General ground-water monitoring requirements.
264.98 Detection monitoring program.
264.99 Compliance monitoring program.
264.100 Corrective action program.
264.101 Corrective action for solid waste management units.

Subpart G—Closure and Post-Closure

264.110 Applicability.
264.111 Closure performance standard.
264.112 Closure plan; amendment of plan.
264.113 Closure; time allowed for closure.
264.114 Disposal or decontamination of equipment, structures and soils.
264.115 Certification of closure.
264.116 Survey plat.
264.117 Post-closure care and use of property.

MOTOR VEHICLE INSPECTION (TRANSPORTING HAZARDOUS MATERIALS)

(Read Instructions before completing this form.)

This form applies to all vehicles which must be marked or placarded in accordance with Title 49 CFR.

1. GOVERNMENT BILL OF LADING/TRANSPORTATION CONTROL NUMBER

SECTION 1 - DOCUMENTATION	ORIGIN a.	DESTINATION b.
2. CARRIER/GOVERNMENT ORGANIZATION		
3. DATE/TIME OF INSPECTION		
4. LOCATION OF INSPECTION		
5. OPERATOR(S) NAME(S)		
6. OPERATOR(S) LICENSE NUMBER(S)		
7. MEDICAL EXAMINER'S CERTIFICATE*		

8. *(X if satisfactory at origin)*

a. MILITARY HAZMAT ENDORSEMENT		d. ERG OR EQUIVALENT COMMERCIAL:	YES		NO		
b. VALID LEASE*		e. DRIVER'S VEHICLE INSPECTION REPORT*					
c. ROUTE PLAN		f. COPY OF 49 CFR PART 397					

9. CVSA DECAL DISPLAYED ON COMMERCIAL EQUIPMENT*

	YES	NO
a. TRUCK/TRACTOR		
b. TRAILER		

SECTION II - MECHANICAL INSPECTION

All items shall be checked on empty equipment prior to loading. Items with an asterisk shall be checked on all incoming loaded equipment.

10. TYPE OF VEHICLE(S)

11. VEHICLE NUMBER(S)

12. PART INSPECTED *(X as applicable)*	ORIGIN (1) SAT	ORIGIN (1) UNSAT	DESTINATION (2) SAT	DESTINATION (2) UNSAT		ORIGIN (1) SAT	ORIGIN (1) UNSAT	DESTINATION (2) SAT	DESTINATION (2) UNSAT	COMMENTS (3)
a. SPARE ELECTRICAL FUSES					k. EXHAUST SYSTEM					
b. HORN OPERATIVE					l. BRAKE SYSTEM*					
c. STEERING SYSTEM					m. SUSPENSION					
d. WINDSHIELD/WIPERS					n. COUPLING DEVICES					
e. MIRRORS					o. CARGO SPACE					
f. WARNING EQUIPMENT					p. LANDING GEAR*					
g. FIRE EXTINGUISHER*					q. TIRES, WHEELS, RIMS					
h. ELECTRICAL WIRING					r. TAILGATE/DOORS*					
i. LIGHTS AND REFLECTORS					s. TARPAULIN*					
j. FUEL SYSTEM*					t. OTHER *(Specify)*					

13. INSPECTION RESULTS *(X one)* ACCEPTED ☐ REJECTED ☐

(If rejected give reason under "Remarks". Equipment will be approved if deficiencies are corrected prior to loading.)

14. SATELLITE MOTOR SURVEILLANCE SYSTEM: *(X one)* ACCEPTED ☐ REJECTED ☐

15. REMARKS

16. INSPECTOR SIGNATURE *(Origin)*

17. INSPECTOR SIGNATURE *(Destination)*

SECTION III - POST LOADING INSPECTION

This section applies to Commercial and Government/Military vehicles. All items will be checked prior to release of loaded equipment and shall be checked on all incoming loaded equipment.

	ORIGIN (1) SAT	ORIGIN (1) UNSAT	DESTINATION (2) SAT	DESTINATION (2) UNSAT	COMMENTS (3)
18. LOADED IAW APPLICABLE SEGREGATION/COMPATIBILITY TABLE OF 49 CFR					
19. LOAD PROPERLY SECURED TO PREVENT MOVEMENT					
20. SEALS APPLIED TO CLOSED VEHICLE: TARPAULIN APPLIED ON OPEN EQUIPMENT					
21. PROPER PLACARDS APPLIED					
22. SHIPPING PAPERS/DD FORM 836 FOR GOVERNMENT VEHICLE SHIPMENTS					
23. COPY OF DD FORM 626 FOR DRIVER					
24. SHIPPED UNDER DOT EXEMPTION 868					

25. INSPECTOR SIGNATURE *(Origin)*

26. DRIVER(S) SIGNATURE *(Origin)*

27. INSPECTOR SIGNATURE *(Destination)*

28. DRIVER(S) SIGNATURE *(Destination)*

DD FORM 626, SEP 1998 (EG) PREVIOUS EDITION IS OBSOLETE.

Page 1 of 3 Pages

Designed using Perform Pro, WHS/DIOR, Sep 98

INSTRUCTIONS

SECTION I - DOCUMENTATION

General Instructions.

All items (2 through 9) will be checked at origin prior to loading. Items with an asterisk (*) apply to commercial operators or equipment only. Only items 2 through 7 are required to be checked at destination.

Items 1 through 5. Self explanatory.

Item 6. Enter operator's Commercial Driver's License (CDL) number or Military OF-346 License Number. CDL and OF-346 must have the HAZMAT and other appropriate endorsements IAW Part 383.

Item 7. *Enter the expiration date listed on the Medical Examiner's Certificate.

Item 8.a. APPLIES TO MILITARY OPERATORS ONLY. Military Hazardous Materials Certification. In accordance with applicable service regulations, ensure operator has been certified to transport hazardous materials.

b. *Valid Lease. Shipper will ensure a copy of the appropriate contract of lease is carried in all leased vehicles and is available for inspection. (Defense Transportation Regulation (DTR) requirement.)

c. Route Plan. Prior to loading any Hazard Class/Division 1.1, 1.2, or 1.3 (Explosives) for shipment, ensure that the operator possesses a written route plan in accordance with 49 CFR Part 397. Route Plan requirements for Hazard Class 7 (Radioactive) materials are found in 49 CFR 397.101.

d. Emergency Response Guidebook (ERG) or Equivalent. Commercial operators must be in possession of an ERG or equivalent document. Shipper will provide applicable ERG page(s) to military operators.

e. *Driver's Vehicle Inspection Report. Review the operator's Vehicle Inspection Report. Ensure that there are no defects listed on the report that would affect the safe operation of the vehicle.

f. Copy of 49 CFR Part 397. Operators are required by regulation to have in their possession a copy of 49 CFR Part 397 (Hazardous Materials Driving and Parking Rules). If military operators do not possess this document, shipper may provide a copy to operator.

Item 9. *Commercial Vehicle Safety Alliance (CVSA) Decal. Check to see if equipment has a current CVSA decal and mark applicable box. Vehicles without CVSA, check documentation of the last vehicle periodic inspection.

SECTION II - MECHANICAL INSPECTION

General Instructions.

All items (12.a. through 12.t.) will be checked on all incoming empty equipment prior to loading. All UNSATISFACTORY conditions must be corrected prior to loading. Items with an asterisk (*) shall be checked on all incoming loaded equipment. Unsatisfactory conditions that would affect the safe off-loading of the equipment must be corrected prior to unloading.

SECTION II *(Continued)*

Item 12.a. Spare Electrical Fuses. Check to ensure that at least one spare fuse for each type of installed fuse is carried on the vehicle as a spare or vehicle is equipped with an overload protection device (circuit breaker). (49 CFR 393.95)

b. Horn Operative. Ensure that horn is securely mounted and of sufficient volume to serve purpose. (49 CFR 393.81)

c. Steering System. The steering wheel shall be secure and must not have any spokes cracked through or missing. The steering column must be securely fastened. Universal joints shall not be worn, faulty or repaired by welding. The steering gear box shall not have loose or missing mounting bolts or cracks in the gear box mounting brackets. The pitman arm on the steering gear output shaft shall not be loose. Steering wheel shall turn freely through the limit of travel in both directions. All components of a power steering system must be in operating condition. No parts shall be loose or broken. Belts shall not be frayed, cracked or slipping. The power steering system shall not be leaking. (49 CFR 396 Appendix G)

d. Windshield/Wipers. Inspect to ensure that windshield is free from breaks, cracks or defects that would make operation of the vehicle unsafe; that the view of the driver is not obscured and that the windshield wipers are operational and wiper blades are in serviceable condition. Defroster must be operative when conditions require. (49 CFR 393.60, 393.78 and 393.79)

e. Mirrors. Every vehicle must be equipped with two rear vision mirrors located so as to reflect to the driver a view of the highway to the rear along both sides of the vehicle. Mirrors shall not be cracked or dirty. (49 CFR 393.80)

f. Warning Equipment. Equipment must include three bidirectional emergency reflective triangles that conform to the requirements of FMVSS No. 125. FLAME PRODUCING DEVICES ARE PROHIBITED. (49 CFR 393.95)

g. Fire Extinguisher. Military vehicles must be equipped with two serviceable fire extinguishers with an Underwriters Laboratories rating of 10 BC or more. (Commercial motor vehicles must be equipped with one serviceable 10 BC Fire Extinguisher). Fire extinguisher(s) must be located so that it is readily accessible for use and securely mounted on the vehicle. The fire extinguisher must be designed, constructed and maintained to permit visual determination of whether it is fully charged. (49 CFR 393.95)

h. Electrical Wiring: Electrical wiring must be clean and properly secured. Insulation must not be frayed, cracked or otherwise in poor condition. There shall be no uninsulated wires, improper splices or connections. Wires and electrical fixtures inside the cargo area must be protected from the lading. (49 CFR 393.28, 393.32, 393.33)

INSTRUCTIONS

SECTION II *(Continued)*

i. Lights/Reflectors. (Head, tail, turn signal, brake, clearance, marker and identification lights, Emergency Flashers). Inspect to see that all lighting devices and reflectors required are operable, of proper color and properly mounted. Ensure that lights and reflectors are not obscured by dirt or grease or have broken lenses. High/Low beam switch must be operative. Emergency Flashers must be operative on both the front and rear of vehicle. (49 CFR 393)

j. Fuel System. Inspect fuel tank and lines to ensure that they are in serviceable condition, free from leaks, or evidence of leakage and securely mounted. Ensure that fuel tank filler cap is not missing. Examine cap for defective gasket or plugged vent. Inspect filler necks to see that they are in completely serviceable condition and not leaking at joints. (49 CFR 393.83 and 396 Appendix G)

k. Exhaust System. Exhaust system shall discharge to the atmosphere at a location to the rear of the cab or if the exhaust projects above the cab, at a location near the rear of the cab. Exhaust system shall not be leaking at a point forward of or directly below the driver compartment. No part of the exhaust system shall be located where it will burn, char or damage electrical wiring, fuel system or any other part of the vehicle. No part of the exhaust system shall be temporarily repaired with wrap or patches. (49 CFR 393.83 and 396 Appendix G)

l. Brake System (to include hand brakes, parking brakes and Low Air Warning devices). Check to ensure that brakes are operational and properly adjusted. Check for audible air leaks around air brake components and air lines. Check for fluid leaks, cracked or damaged lines in hydraulic brake systems. Ensure that parking brake is operational and properly adjusted. Low Air Warning devices must be operative. (49 CFR 396 Appendix G)

m. Suspension. Inspect for indications of misaligned, shifted or cracked springs, loosened shackles, missing bolts, spring hangers unsecured at frame and cracked or loose U-bolts. Inspect for any unsecured axle positioning parts, and sign of axle misalignment, broken torsion bar springs (if so equipped). (49 CFR 396 Appendix G)

n. Coupling Devices (Inspect without uncoupling). Fifth Wheels: Inspect for unsecured mounting to frame or any missing or damaged parts. Inspect for any visible space between upper and lower fifth wheel plates. Ensure that the locking jaws are around the shank and not the head of the kingpin. Ensure that the release lever is seated properly and safety latch is engaged. Pintle Hook, Drawbar, Towbar Eye and Tongue and Safety Devices: Inspect for unsecured mounting, cracks, missing or ineffective fasteners (welded repairs to pintle hook is prohibited). Ensure safety devices (chains, hooks, cables) are in serviceable condition and properly attached. (49 CFT 396 Appendix G)

o. Cargo Space. Inspect to ensure that cargo space is clean and free from exposed bolts, nuts, screws, nails or inwardly projecting parts that could damage the lading. Check floor to ensure it is tight and free from holes. Floor shall not be permeated with oil or other substances. (49 CFR 177.815(e)(1) and 398.94)

p. Landing Gear. Inspect to ensure that landing gear and assembly are in serviceable condition, correctly assembled, adequately lubricated and properly mounted.

SECTION II *(Continued)*

q. Tires, Wheels and Rims: Inspect to ensure that tires are properly inflated. Flat or leaking tires are unacceptable. Inspect tires for cuts, bruises, breaks and blisters. Tires with cuts that extend into the cord body are unacceptable. Thread depth shall not be less than: 4/32 inches for tires on a steering axle of a power unit, and 2/32 inches for all other tires. Mixing bias and radial on the steering axle is prohibited. Inspect wheels and rims for cracks, unseated locking rings, broken, loose, damaged or missing lug nuts or elongated stud holes. (49 CFR 396 Appendix G)

r. Tailgate/Doors. Inspect to see that all hinges are tight in body. Check for broken latches and safety chains. Doors must close securely. (49 CFR 177.835(h))

s. Tarpaulin. If shipment is made on open equipment, ensure that lading is properly covered with fire and water resistant tarpaulin. (49 CFR 177.835(h))

t. Other Unsatisfactory Condition. Note any other condition which would prohibit the vehicle from being loaded with hazardous materials.

Item 14. For AA&E and other shipments requiring satellite surveillance, ensure that the Satellite Motor Surveillance System is operable. Shipper will instruct the driver to send a "test" emergency message to DTTS by having the driver activate the "emergency (panic) button". Shipper will contact DTTS at 1-800-826-0794 to verify that test message was received. Message must be received by DTTS for system to be considered operational.

SECTION III - POST LOADING INSPECTION

General Instructions.

All items will be checked prior to the release of loaded equipment. Shipment will not be released until deficiencies are corrected. All items will be checked on incoming loaded equipment. Deficiencies will be reported in accordance with applicable service regulations.

Item 18. Check to ensure shipment is loaded in accordance with 49 CFR Part 177.848 and the applicable Segregation or Compatibility Table of 49 CFR 177.848.

Item 19. Check to ensure the load is secured from movement in accordance with applicable service outload drawings.

Item 20. Check to ensure seal(s) have been applied to closed equipment; fire and water resistant tarpaulin applied on open equipment.

Item 21. Check to ensure each transport vehicle has been properly placarded in accordance with 49 CFR Part 172 Subpart F.

Item 22. Check to ensure operator has been provided shipping papers that comply with 49 CFR Part 172 Subpart C. For shipments transported by Government vehicle, shipping paper will be DD Form 836.

Item 23. Ensure operator(s) sign DD Form 626, are given a copy and understand the hazards associated with the shipment.

Item 24. Applies to Commercial Shipments Only. If shipment is made under DOT Exemption 868, ensure that shipping papers are properly annotated and copy of Exemption 868 is with shipping papers.

Interim Holding Facility Inspection Checklist

Period Covered: From _____ to _____

	MON		TUES		WED		THUR		FRI		SAT		SUN	
Inspector: Date: Time:	Pass	Fail	Pass	Fail	Pass	Fail	Pass	Fail	Pass	Fail	Pass	Fail	Pass	Fail
Outside														
Signs posted on IHF entrance gate	☐	☐	☐	☐	☐	☐	☐	☐	☐	☐	☐	☐	☐	☐
Area secure, gate closed and locked, IHF door closed and locked	☐	☐	☐	☐	☐	☐	☐	☐	☐	☐	☐	☐	☐	☐
Storage Area														
Building structurally sound	☐	☐	☐	☐	☐	☐	☐	☐	☐	☐	☐	☐	☐	☐
Area clean of debris	☐	☐	☐	☐	☐	☐	☐	☐	☐	☐	☐	☐	☐	☐
Aisle space adequate for emergency response	☐	☐	☐	☐	☐	☐	☐	☐	☐	☐	☐	☐	☐	☐
All containers on pallets	☐	☐	☐	☐	☐	☐	☐	☐	☐	☐	☐	☐	☐	☐
All containers sealed	☐	☐	☐	☐	☐	☐	☐	☐	☐	☐	☐	☐	☐	☐
No leaks, spills, leaking containers, or residue	☐	☐	☐	☐	☐	☐	☐	☐	☐	☐	☐	☐	☐	☐
Containers turned so that labels are visible	☐	☐	☐	☐	☐	☐	☐	☐	☐	☐	☐	☐	☐	☐
Inspect container labels														
composition of waste	☐	☐	☐	☐	☐	☐	☐	☐	☐	☐	☐	☐	☐	☐
quantity of waste	☐	☐	☐	☐	☐	☐	☐	☐	☐	☐	☐	☐	☐	☐
generator	☐	☐	☐	☐	☐	☐	☐	☐	☐	☐	☐	☐	☐	☐
date of acceptance	☐	☐	☐	☐	☐	☐	☐	☐	☐	☐	☐	☐	☐	☐
Inspect secondary containment sumps	☐	☐	☐	☐	☐	☐	☐	☐	☐	☐	☐	☐	☐	☐

Interim Holding Facility Inspection Checklist (Continued)

Period Covered: From _____ to _____

Inspector:
Date:
Time:

	MON		TUES		WED		THUR		FRI		SAT		SUN	
	Pass	Fail	Pass	Fail	Pass	Fail	Pass	Fail	Pass	Fail	Pass	Fail	Pass	Fail
Equipment														
Emergency shower/eyewash operable	☐	☐	☐	☐	☐	☐	☐	☐	☐	☐	☐	☐	☐	☐
Absorbent available	☐	☐	☐	☐	☐	☐	☐	☐	☐	☐	☐	☐	☐	☐
Inspect fire extinguishers	☐	☐	☐	☐	☐	☐	☐	☐	☐	☐	☐	☐	☐	☐
Gloves available	☐	☐	☐	☐	☐	☐	☐	☐	☐	☐	☐	☐	☐	☐
Eye protection available	☐	☐	☐	☐	☐	☐	☐	☐	☐	☐	☐	☐	☐	☐
Respirators available	☐	☐	☐	☐	☐	☐	☐	☐	☐	☐	☐	☐	☐	☐
Protective clothing available	☐	☐	☐	☐	☐	☐	☐	☐	☐	☐	☐	☐	☐	☐
Spill kit available and complete	☐	☐	☐	☐	☐	☐	☐	☐	☐	☐	☐	☐	☐	☐
Tool kit available and complete	☐	☐	☐	☐	☐	☐	☐	☐	☐	☐	☐	☐	☐	☐
First aid kit available and complete	☐	☐	☐	☐	☐	☐	☐	☐	☐	☐	☐	☐	☐	☐
Records/Reports														
Waste logs complete, accurate and up-to-date	☐	☐	☐	☐	☐	☐	☐	☐	☐	☐	☐	☐	☐	☐
Manifests logged and filed	☐	☐	☐	☐	☐	☐	☐	☐	☐	☐	☐	☐	☐	☐
Copies of returned manifests	☐	☐	☐	☐	☐	☐	☐	☐	☐	☐	☐	☐	☐	☐
Emergency Response Contingency Plan on file	☐	☐	☐	☐	☐	☐	☐	☐	☐	☐	☐	☐	☐	☐
Sample records on file	☐	☐	☐	☐	☐	☐	☐	☐	☐	☐	☐	☐	☐	☐
Discrepancy reports prepared and filed	☐	☐	☐	☐	☐	☐	☐	☐	☐	☐	☐	☐	☐	☐
Incident reports for spills on file	☐	☐	☐	☐	☐	☐	☐	☐	☐	☐	☐	☐	☐	☐

Comments:

_____

_____

Interim Holding Facility Inspection Checklist (Continued)

Corrective Action:

Mon:	Item:	_____	Action Taken:	_____
	Date:	_____	Signature:	_____
Tue:	Item:	_____	Action Taken:	_____
	Date:	_____	Signature:	_____
Wed:	Item:	_____	Action Taken:	_____
	Date:	_____	Signature:	_____
Thur:	Item:	_____	Action Taken:	_____
	Date:	_____	Signature:	_____
Fri:	Item:	_____	Action Taken:	_____
	Date:	_____	Signature:	_____
Sat:	Item:	_____	Action Taken:	_____
	Date:	_____	Signature:	_____
Sun:	Item:	_____	Action Taken:	_____
	Date:	_____	Signature:	_____

MATERIEL COURIER RECEIPT	SHIPPER'S CONTROL/DOCUMENT NO.
SHIPPER	SUPPLY ACCOUNT NUMBER
DESTINATION	SUPPLY ACCOUNT NUMBER

PRIVACY ACT STATEMENT

AUTHORITY 5 U.S.C., Sec 552a (PL 93 579)

PRINCIPLE PURPOSES: To provide a receipt for transfer of controlled materiel. The use of the SSAN is required and is necessary to provide positive identification of the individuals receipting for the materiel.

ROUTINE USES: To document transfer of materiel from a shipper to a courier, courier to courier and/or receiver.

DISCLOSURE IS VOLUNTARY: Since the SSAN must be used, refusal to provide SSAN may be grounds for action to remove the individual concerned from duties involving the materiel transferred by use of this form.

I certify by my signature that I have received the materiel listed on this form and am aware of the applicable safety and security requirements.

SHIPMENT TRANSFERS

FIRST	LOCATION OF TRANSFER	DATE(YR/MO/DAY)
RECIPIENT'S PRINTED NAME (LAST, FIRST, M.I.)	ORGAN. OR ACCOUNT NO.	
SIGNATURE	SOCIAL SECURITY NUMBER	
SECOND	LOCATION OF TRANSFER	DATE (YR/MO/DAY)
RECIPIENT'S PRINTED NAME (LAST, FIRST, M.I.)	ORGAN. OR ACCOUNT NO.	
SIGNATURE	SOCIAL SECURITY NUMBER	
THIRD	LOCATION OF TRANSFER	DATE (YR/MO/DAY)
RECIPIENT'S PRINTED NAME (LAST, FIRST, M.I.)	ORGAN. OR ACCOUNT NO.	
SIGNATURE	SOCIAL SECURITY NUMBER	
FOURTH	LOCATION OF TRANSFER	DATE (YR/MO/DAY)
RECIPIENT'S PRINTED NAME (LAST, FIRST, M.I.)	ORGAN. OR ACCOUNT NO.	
SIGNATURE	SOCIAL SECURITY NUMBER	
FIFTH	LOCATION OF TRANSFER	DATE (YR/MO/DAY)
RECIPIENT'S PRINTED NAME (LAST, FIRST, M.I.)	ORGAN. OR ACCOUNT NO.	
SIGNATURE	SOCIAL SECURITY NUMBER	

SHIPMENT DESCRIPTION

LINE NUMBER	QUANTITY	SERIAL NUMBERS	REMARKS

DD FORM 1911 62 MAY

PREVIOUS EDITION MAY BE USED UNTIL 31 DEC 82

DD Form 1911, Materiel Courier Receipt

INSTRUCTIONS FOR COMPLETING DD FORM 836

GENERAL

DD Form 836 shall be completed by a *qualified individual from a transportation office, unit or other organization offering hazardous material for transportation in areas accessible to the general public.

*An individual is considered qualified to complete and sign (certify) DD Form 836, only after having satisfactorily completed either a DoD authorized Hazardous Material Course from one of the DoD-approved schools listed in the Defense Transportation Regulation (DTR) or technical specialist training in accordance with DTR, Part II, Chapter 204, Para (E). This person shall be appointed in writing by the activity or unit Commander, to include scope of authority.

Item 1. If applicable, at the top of the page fill in the nomenclature, model number, TCN, and bumper number/serial number, of the vehicle/container.

Item 2a. Enter the place/date the hazardous material was certified (e.g., B, Company 1/8 CAV Motor Pool, Fort Hood, TX 1 AUG 1998).

Item 2b. Enter the date the hazardous material will move.

Item 2c. Enter the page number and total number of pages of the DD Form 836 for the vehicle carrying the hazardous material. Example: "Page 1 of 5 Pages". Leave blank if there are no continuation sheets.

Item 3. Cargo.

Item 3a. Enter the total number of packages by type.

Item 3b. Enter the type of package (e.g., box, pallet, drum, cylinder, container, etc.), the hazardous material is packaged in.

Item 3c. Enter the Proper Shipping Name of the hazardous material and if applicable include the technical name. (Enter additional information as required by 49 CFR, §172.203 - Example: RQ, Inhalation Hazard.)

Item 3d. Enter the Hazard Class/Division and, if applicable, the Compatibility Group.

Item 3e. Enter the Identification Numbers (e.g., UN, NA). The letters "UN" or "NA" must be noted.)

Item 3f. Enter the Packing Group (e.g. I, II, or III) of the hazardous material.

Item 3g. Enter the total Gross, Mass, or Net Quantity for non-explosive material in metric measure. U.S. measure may be added in parentheses.

Item 3h. Enter total Net Explosive Weight (NEW) for ammunition/ explosives (Class I items). NEW information is found in the Joint Hazard Classification System (JHCS) in the column headed NEW (third explosive weight column).

Item 4a. Enter the Shipper's (e.g., unit name, agency, manufacturer, certifying person, etc.) address and telephone number where the hazardous material originated. Telephone number shall be monitored at all times (24 hour) until shipment is received by consignee. Telephone number is for NOTIFICATION PURPOSES ONLY. Emergency assistance shall be obtained from the appropriate 24 HOUR EMERGENCY ASSISTANCE TELEPHONE NUMBER. Additional notification if needed can be annotated in block 5.

Item 4b. Enter the six-digit Department of Defense Activity Address Codes (DODAAC) and/or the in-the-clear geographical location of the ultimate receiver or consignee of the HAZMAT shipment (e.g. Ft. Irwin CA.). (If this is a unit move, the unit name will be the same as that for 4a.) Additional information if needed can be annotated in Block 5.

Item 4c. Enter the ERG #(s) for the materials being shipped. (For materials other than explosives attach a copy of the ERG page, unless the vehicle has a copy of a current ERG.)

Item 5. Additional handling instructions/information. Enter additional information if needed or required concerning the hazardous material or emergency response information. (Example: for materials that must be kept dry, add statement "Keep Away From Water".)

Item 6a and 6b. Certifying person must sign in writing (longhand) and must type or print name legibly in 6b.

Item 6c. Vehicle operator(s) signs to accept responsibility for the load.
Military Drivers: Ensure the operator's OF 346, U.S. Government Motor Vehicle (Operator's Identification Card, contains the appropriate HAZMAT training, vehicle trained on, IAW DoD and component regulations.)
Civilian Drivers: Ensure the operator has a current DOT Commercial Driver License (CDL) IAW Title 49 CFR, Part 383.

NOTES:
1. Units returning from exercise or firing range must have a certified or qualified person to ensure that all HAZMAT is properly repackaged and secured (i.e. blocked, braced, tied down) prior to being transported back to base.

2. Completion of a new DD Form 836 is not required. Original DD Form 836 may be used provided that:

a. Change Item 2a. (Date Prepared) and Item 2b. (Date of Travel) as appropriate.

b. Change Item 3. (Cargo):
(i) HAZMAT used shall be deleted from form by crossing out or lining through.
(ii) HAZMAT which remains, but is in different quantities shall have the correct amounts entered in the appropriate section(s).

EXCEPTION:
c. Change Item 6.a.:
(i) A qualified individual (if available) shall sign in writing (longhand). If a qualified individual is not available, then the Officer-In-Charge (OIC) or Non-Commissioned Officer-In-Charge (NCOIC) shall sign in writing (longhand) to verify that the above procedures have been performed for the return trip to base.
(ii) Cross out original signature if different certifier will be used.

DD FORM 836 INSTRUCTIONS, SEP 1998

1. NOMENCLATURE:
MODEL NO.:

TCN NUMBER:
SERIAL NO.:

BUMPER NO.

SHIPPING PAPER AND EMERGENCY RESPONSE INFORMATION FOR HAZARDOUS MATERIALS TRANSPORTED BY GOVERNMENT VEHICLES

THIS VEHICLE IS TRANSPORTING HAZARDOUS MATERIALS

2a. LOCATION AND DATE PREPARED	b. DATE OF TRAVEL	c. PAGE OF PAGES

TO BE COMPLETED BY THE UNIT OR SHIPPER T.O. OFFICE.

3. CARGO

PACKAGES NUMBER a.	PACKAGES KIND b.	PROPER SHIPPING NAME *(Include RQ, Technical Names, Additional Information per §172.203 as required.)* c.	HC d.	UN OR ID NO. e.	PG f.	NET TOTAL QTY. g.	TOTAL AMMO (NEW) h.

4. EMERGENCY NOTIFICATION. IN ALL CASES OF ACCIDENT, INCIDENT, BREAKDOWN OR FIRE, PROMPT NOTIFICATION MUST BE GIVEN TO:

a. SHIPPER'S ADDRESS AND TELEPHONE NO. *(List 24-hour telephone numbers):*	b. CONSIGNEE

FOR SAFE HAVEN/REFUGE, IMMEDIATELY CALL APPROPRIATE MTMC AREA HOTLINE LISTED BELOW:
EASTERN/WESTERN UNITED STATES: 1-800-524-0331
NEW JERSEY ONLY: 1-800-642-1381

24-HOUR EMERGENCY ASSISTANCE TELEPHONE NUMBERS:

DOD NON-EXPLOSIVE HAZARDOUS MATERIALS ONLY: 1-800-851-8061 TO CALL FROM A SHIP: 804-279-3166 (COLLECT)	DOD HAZARD CLASS 1 (EXPLOSIVES) ONLY CALL ARMY OPERATIONS CENTER - COLLECT 703-697-0218/0219 ASK FOR THE WATCH OFFICER	NATIONAL RESPONSE CENTER (NRC) 1-800-424-8802 TO CALL FROM A SHIP: 202-267-2675 (COLLECT) DOD RADIOACTIVE MATERIAL ONLY - COLLECT: 309-782-3510 ASK FOR STAFF DUTY OFFICER

4c. COPY OF EMERGENCY GUIDE NUMBER(S) _____ ATTACHED.

5. REMARKS

6. CERTIFICATION
THIS IS TO CERTIFY THAT THE HEREIN NAMED MATERIALS ARE PROPERLY CLASSIFIED, DESCRIBED, PACKAGED, MARKED, AND LABELED, AND ARE IN PROPER CONDITION FOR TRANSPORTATION ACCORDING TO THE APPLICABLE REGULATIONS OF THE DEPARTMENT OF TRANSPORTATION.

a. SIGNATURE OF SHIPPER CERTIFIER	c. SIGNATURE(S) OF VEHICLE OPERATOR(S)
b. PRINT NAME OF SHIPPER CERTIFIER	

DD FORM 836, SEP 1998 (EG) PREVIOUS EDITION IS OBSOLETE. Designed using Perform Pro, WHS/DIOR, Sep 98

EMERGENCY RESPONSE INFORMATION

Guide Numbers 112 and 114 from the U.S. Department of Transportation North American Emergency Response Guide Book (RSPA P 5800.7) are reproduced hereon. These guides are applicable to Hazard Class 1 Materials (Explosives).

Mark an X in the appropriate box:

☐ USE GUIDE 112 FOR EXPLOSIVES: (1.1), (1.2), (1.3), (1.5) or (1.6) Class A or B

☐ USE GUIDE 114 FOR EXPLOSIVES: (1.4) Class C

For all other hazardous materials or substances, annotate appropriate Emergency Response Guide Book Guide Number in the block below, and attach a copy of the guide number page or pages.

GUIDE 112

POTENTIAL HAZARDS

FIRE OR EXPLOSION:

MAY EXPLODE AND THROW FRAGMENTS 1600 METERS (1 MILE) OR MORE IF FIRE REACHES CARGO.

HEALTH HAZARDS:

Fire may produce irritating, corrosive and/or toxic gases.

PUBLIC SAFETY:

CALL Emergency Response Telephone Number on Shipping Paper first. If Shipping Paper not available or no answer, CALL CHEMTREC AT 1-800-424-9300.

- Isolate spill or leak area immediately for at least 500 meters (1/3 mile) in all directions. Move people out of line of sight of the scene and away from windows.
- Keep unauthorized personnel away and stay upwind.
- Ventilate closed spaces before entering.

PROTECTIVE CLOTHING:

- Wear positive pressure self-contained breathing apparatus (SCBA), and Structural firefighters' protective clothing will only provide limited protection.

EVACUATION:

LARGE SPILL

Consider initial evacuation for 800 meters (1/2 mile) in all directions.

FIRE

- If rail car or trailer is involved in a fire and heavily encased explosives such as bombs or artillery projectiles are suspected, ISOLATE for 1600 meters (1 mile) in all directions; also, initiate evacuation including emergency responders for 1600 meters (1 mile) in all directions.
- When heavily encased explosives are not involved, evacuate the area for 800 meters (1/2 mile) in all directions.

EMERGENCY RESPONSE:

FIRE

CARGO Fires: DO NOT FIGHT FIRE WHEN IT REACHES CARGO! CARGO MAY EXPLODE!

- Stop all traffic and clear the area for at least 1600 meters (1 mile) in all directions and let burn. Do not move cargo or vehicle if cargo has been exposed to heat.

TIRE or VEHICLE Fires:

- Use plenty of water - FLOOD it! If water is not available, use CO2, dry chemical or dirt. If possible, and WITHOUT RISK, use unmanned hose holders or monitor nozzles from maximum distance to prevent fire from spreading to cargo area.
- Pay special attention to tire fires as re-ignition may occur. Stand by with extinguisher ready.

SPILL OR LEAK:

- ELIMINATE all ignition sources (no smoking, flares, sparks or flames in immediate area).
- All equipment used when handling the product must be grounded. Do not touch or walk through spilled material.
- DO NOT OPERATE RADIO TRANSMITTERS WITHIN 100 METERS (330 feet) OF ELECTRIC DETONATORS.
- DO NOT CLEAN UP OR DISPOSE OF, EXCEPT UNDER SUPERVISION OF A SPECIALIST.

FIRST AID:

- Move victim to fresh air. Call emergency medical care.
- Apply artificial respiration if victim is not breathing.
- Administer oxygen if breathing is difficult.
- Remove and isolate contaminated clothing and shoes.
- In case of contact with substance, immediately flush skin or eyes with running water for at least 20 minutes.
- Ensure that medical personnel are aware of the material(s) involved, and take precautions to protect themselves.

GUIDE 114

POTENTIAL HAZARDS

FIRE OR EXPLOSION:

MAY EXPLODE AND THROW FRAGMENTS 500 METERS (1/3 MILE) OR MORE IF FIRE REACHES CARGO.

HEALTH HAZARDS:

Fire may produce irritating, corrosive and/or toxic gases.

PUBLIC SAFETY:

CALL Emergency Response Telephone Number on Shipping Paper first. If Shipping Paper not available or no answer, CALL CHEMTREC AT 1-800-424-9300.

- Isolate spill or leak area immediately for at least 100 meters (330 feet) in all directions. Move people out of line of sight of the scene and away from windows.
- Keep unauthorized personnel away and stay upwind.
- Ventilate closed spaces before entering.

PROTECTIVE CLOTHING:

- Wear positive pressure self-contained breathing apparatus (SCBA), and Structural firefighters' protective clothing will only provide limited protection.

EVACUATION:

LARGE SPILL

Consider initial evacuation for 250 meters (800 feet) in all directions.

FIRE

- If rail car or trailer is involved in a fire, ISOLATE for 500 meters (1/3 mile) in all directions; also, initiate evacuation including emergency responders for 500 meters (1/3 mile) in all directions.

CARGO Fires: DO NOT FIGHT FIRE WHEN IT REACHES CARGO! CARGO MAY EXPLODE!

- Stop all traffic and clear the area for at least 500 meters (1/3 mile) in all directions and let burn. Do not move cargo or vehicle if cargo has been exposed to heat.

TIRE or VEHICLE Fires:

- Use plenty of water - FLOOD it! If water is not available, use CO2, dry chemical or dirt. If possible, and WITHOUT RISK, use unmanned hose holders or monitor nozzles from maximum distance to prevent fire from spreading to cargo area.
- Pay special attention to tire fires as re-ignition may occur. Stand by with extinguisher ready.

SPILL OR LEAK:

- ELIMINATE all ignition sources (no smoking, flares, sparks or flames in immediate area).
- All equipment used when handling the product must be grounded. Do not touch or walk through spilled material.
- DO NOT OPERATE RADIO TRANSMITTERS WITHIN 100 METERS (330 feet) OF ELECTRIC DETONATORS.
- DO NOT CLEAN UP OR DISPOSE OF, EXCEPT UNDER SUPERVISION OF A SPECIALIST.

FIRST AID:

- Move victim to fresh air. Call emergency medical care.
- Apply artificial respiration if victim is not breathing.
- Administer oxygen if breathing is difficult.
- Remove and isolate contaminated clothing and shoes.
- In case of contact with substance, immediately flush skin or eyes with running water for at least 20 minutes.
- Ensure that medical personnel are aware of the material(s) involved, and take precautions to protect themselves.

SUPPLEMENTAL INFORMATION

Packages bearing the 1.4S label contain explosive substances or articles that are designed or packaged in such a manner that when involved in a fire, may burn vigorously with localized detonations and projection of fragments; effects are usually confined to immediate vicinity of packages.

If fire threatens cargo area containing packages bearing the 1.4S label, consider initial isolation of at least 15 meters (50 feet) in all directions. Fight fire with normal precaution from a reasonable distance.

DD FORM 836 (BACK), SEP 1998

1. NOMENCLATURE:
MODEL NO.:

TCN NUMBER:
SERIAL NO.:

BUMPER NO.

SHIPPING PAPER AND EMERGENCY RESPONSE INFORMATION FOR HAZARDOUS MATERIALS TRANSPORTED BY GOVERNMENT VEHICLES *(Continuation Sheet)*

TO BE COMPLETED BY THE UNIT OR SHIPPER T.O. OFFICE

2c. PAGE OF PAGES

3. CARGO *(Continued)*

PACKAGES		PROPER SHIPPING NAME *(Include RQ, Technical Names, Additional Information per §172.203 as required.)*	HC	UN OR ID NO.	PG	NET TOTAL QTY.	TOTAL AMMO (NEW)
NUMBER a.	KIND b.	c.	d.	e.	f.	g.	h.

COPY OF EMERGENCY GUIDE NUMBER(S) _____ ATTACHED.

DD FORM 836C, SEP 1998 (EG)

Designed using PerformPro, WHS/DIOR, Sep 98

(This page intentionally left blank.)

ANNEX E

GLOSSARY OF TERMS

ANNEX E

GLOSSARY OF TERMS

CEHNC	**U.S. Army Engineering and Support Center, Huntsville:** CEHNC is assisting CESAM in the remedial investigation of Fort McClellan (FTMC) CEHNC is conducting the investigation efforts at locations that may have buried munitions. This includes the sites where CWM may be recovered.
CERCLA	**Comprehensive Environmental Response, Compensation, and Liability Act (1980):** Also called Superfund; Federal law authorizing identification and remediation of abandoned hazardous waste sites; enforced by U.S. Environmental Protection Agency (USEPA).
CESAM	**U.S. Army Corps of Engineers Mobile District:** One of the U.S. Army Corps of Engineers geographic districts. CESAM is conducting the remedial investigation of sites at FTMC.
CWM	**Chemical Warfare Materiel:** Includes chemical weapons, containers, chemical agent identification set (CAIS), and any equipment that may contain or be contaminated with chemical agent.
DHHS	**Department of Health and Human Services:** Federal department; must approve all plans to destroy or transport chemical agents and munitions; the Centers for Disease Control and Prevention (of DHHS) provide support and guidance for chemical weapons programs.

DoD	**U.S. Department of Defense:** Federal department responsible for administering military programs to protect the nation from external aggression; includes all of the military services, the Office of the Secretary of Defense, the Office of the Joint Chiefs of Staff, and several defense agencies.
DOT	**U.S. Department of Transportation:** Federal department; enforces regulations governing the transport of hazardous and nonhazardous materials.
ECBC	**U.S. Army Edgewood Chemical Biological Center (formerly Edgewood Research, Development and Engineering Center):** ECBC is part of SBCCOM. ECBC will participate in the recovery of CWM by conducting perimeter monitoring, providing laboratory services, and assisting TEU as necessary.
OSHA	**Occupational Safety and Health Administration:** Federal agency that oversees and regulates workplace health and safety.
PMCD	**Program Manager for Chemical Demilitarization (formerly U.S. Army Chemical Demilitarization and Remediation Activity, or USACDRA) (formerly U.S. Army Chemical Materiel Destruction Agency, or USACMDA):** Single Army agency responsible for all chemical warfare materiel destruction.
PMNSCM	**Product Manager for Non-Stockpile Chemical Materiel:** Provides centralized management and direction to Department of Defense program for the reclamation, recovery, and disposal of non-stockpile chemical materiel in a safe, environmentally sound, cost-effective manner; works for the PMCD.

RCRA	**Resource Conservation and Recovery Act (1976):** Law regulating management and disposal of hazardous materials and wastes currently being generated, treated, stored, disposed, or distributed.
SBCCOM	**U.S. Army Soldier and Biological Chemical Command:** Army Materiel Command organization responsible for chemical and biological defense issues; includes Army experts in chemical munitions design, defense equipment, decontamination, monitoring, etc.
TEU	**U.S. Army Technical Escort Unit:** The TEU is part of SBCCOM. The TEU is responsible for escort of chemical surety materiel during transportation; has explosive ordnance disposal (EOD) and transportation expertise; can be used for emergency destruction of chemical ammunition and for emergency response to chemical agent events. The TEU will conduct recovery, transportation, and storage operations for CWM at FTMC.
USEPA	**U.S. Environmental Protection Agency:** The USEPA is the federal agency responsible for enforcing federal laws and promulgating regulations for protecting the environment. The USEPA ensures that regulations mandated by CERCLA, RCRA, Clean Air Act, etc. are followed.

(This page intentionally left blank.)

ANNEX F

ACRONYMS/ABBREVIATIONS

ANNEX F

ACRONYMS/ABBREVIATIONS

ADEM	Alabama Department of Environmental Management
AFFF	aqueous film forming foam
AOC	Area of Concentration
AR	Army regulation
ASP	Ammunition Supply Point
ASTM	American Society for Testing and Materials
BRAC	Base Realignment and Closure
CAI	chemical accident/incident
CAIS	chemical agent identification set
CEHNC	U.S. Army Engineering and Support Center, Huntsville
CERCLA	Comprehensive Environmental Response, Compensation, and Liability Act
CESAM	U.S. Army Corps of Engineers, Mobile District
CFR	Code of Federal Regulations
CG	phosgene
CK	cyanogen chloride
CPR	cardiopulmonary resuscitation
CWM	chemical warfare materiel
DA	Department of the Army
DAAMS	Depot Area Air Monitoring System
DHHS	Department of Health and Human Services
DoD	Department of Defense
DOT	Department of Transportation

ECBC	Edgewood Chemical Biological Center
EOC	emergency operations center
EOD	explosive ordnance disposal
ERDEC	Edgewood Research, Development and Engineering Center
FTMC	Fort McClellan
GA	tabun
GB	sarin
GC	gas chromatograph
H	mustard
HA	hazard analysis
HD	distilled mustard
HN-1	nitrogen mustard
IDS	intrusion detection system
IHF	interim holding facility
L	lewisite
MCE	maximum credible event
mg/m^3	milligram per cubic meter
MIL-STD	Military Standard
MRC	multiple round container
MSDS	Material Safety Data Sheet
NFPA	National Fire Protection Association
NRT	near real-time
NSCM	non-stockpile chemical materiel
NSCMP	Non-Stockpile Chemical Materiel Project

OSHA	Occupational Safety and Health Administration
Pam	pamphlet
PAO	Public Affairs Office
PINS	portable isotopic neutron spectroscopy
PMCD	U.S. Army Program Manager for Chemical Demilitarization
PMNSCM	Project Manager for Non-Stockpile Chemical Materiel
POIO	Public Outreach and Information Office
PPE	personal protective equipment
PS	chloropicrin
RAC	risk assessment code
RCRA	Resource Conservation and Recovery Act
RI/FS	remedial investigation/feasibility study
SBCCOM	U.S. Army Soldier and Biological Chemical Command
SOP	standing operating procedure
SSHP	Site Safety and Health Plan
SSMP	System Safety Management Plan
TEU	U.S. Army Technical Escort Unit
TM	technical manual
TP	Technical Provision
TWA	time-weighted average
USACDRA	U.S. Army Chemical Demilitarization and Remediation Activity
USACMDA	U.S. Army Chemical Materiel Destruction Agency
UL	Underwriters Laboratories
USEPA	U.S. Environmental Protection Agency

(This page intentionally left blank.)

ANNEX G

REFERENCES

ANNEX G
REFERENCES

Anonymous, *Manfredi Motor Transit Company Wins Back-to-back Safety Awards,* Modern Bulk Transporter, 56 (11), 92 to 98, 1994.

Anonymous, *Usher Transport Includes Customers, Others in Overall Safety Program,* Modern Bulk Transporter, 52 (12), 36 to 43, 1990.

Army Regulation (AR) 50-6, *Nuclear and Chemical Weapons and Materiel, Chemical Surety,* 1 February 1995.

AR 190-11, *Physical Security of Arms, Ammunition, and Explosives,* February 1998.

AR 200-1, *Environmental Protection and Enhancement,* 23 April 1990.

AR 385-61, *The Army Toxic Chemical Agent Safety Program,* 3 November 1992.

Department of the Army (DA), Pamphlet (Pam) 50-6, *Chemical Accident or Incident Response and Assistance Operations,* 17 May 1991.

DA, Pam 385-61, *Toxic Chemical Agent Safety Standards,* 3 November 1992.

DA, Pam 385-64, *Ammunition and Explosive Standards,* 28 November 1997.

DA, Technical Manual 60A-1-1-11, *Explosive Ordnance Disposal Procedures, Chemical/Biological Agents and Related Materials; Characteristics, Leak Sealing, Disposal and Decontamination,* Revision 5, Change 1, prepared by the Naval Explosive Ordnance Disposal Technology Center, Indian Head, Maryland, 23 June 1992.

Department of Transportation, *Research and Special Programs Identification, Emergency Response Guidebook,* TBD.

Fort McClellan (FTMC) Site Response and Contingency Plan, 1999.

FTMC Site Safety and Health Plan, 1999.

Harwood, D.W. and E.R. Russell, *Present Practices of Highway Transportation of Hazardous Materials,* FHWA-RD-89-013, U.S. Department of Transportation, 1990.

Rhyne, W.R. et al., *Probabilistic Analysis of Chemical Agent Release During Transport of M55 Rockets,* M55-CD-4, 1985

Rhyne, W.R. et al., *Probabilistic Source Term for Accidents Associated with the Transport of Chemical Munitions,* paper presented at the American Institute of Chemical Engineers Annual Meeting, August 21 to 24, Denver, CO, 1998.

U.S. Army Chemical Materiel Destruction Agency (USACMDA), *Generic Site Scoping Study,* April 1993.

USACMDA, *System Safety Management Plan,* April 1994.

U.S. Army Corps of Engineers, *Site Work Plan,* 1998.

U.S. Army Field Manual 3-9, *Potential Military Chemical/Biological Agents and Compounds.*

U.S. Army Technical Escort Unit (TEU) *Operations Plan,* 1994.

TEU, TEU SOP 50-1, *Chemical Weapons and Materiel Escorts,* 1 July 1990.

U.S. Congress, Office of Technology Assessment, *Gearing Up for Safety: Motor Carrier Safety in a Competitive Environment,* OTA-SET-382, Washington, D.C., 1988.

Wilson, C.E., *Enterprise Transportation Wins Big with Daily Focus on Fleet Safety,* Modern Bulk Transporter, Vol. 52, No. 12, pp. 24-34, 1990.

(This page intentionally left blank.)

ANNEX H

QUESTIONS AND ANSWERS FOR

FTMC IHF PLAN

ANNEX H
QUESTIONS AND ANSWERS FOR
FTMC IHF PLAN

Q: What items might be recovered at Fort McClellan?

A: *The items that might be recovered include chemical warfare items that were used to train soldiers at Ft. McClellan. The types of items may include ampules or bottles containing small amounts of mustard agent, lewisite or nitrogen mustard, a drum containing up to 5 gallons of mustard agent, and a 155mm projectile or a 4.2-inch mortar round containing mustard agent, nerve agent, or the industrial chemical phosgene.*

Q: What were the items used for?

A: *The items were used to train soldiers to handle chemical munitions and to identify and decontaminate objects contaminated with chemical agent.*

Q: Why are the items being dug up?

A: *As part of the Army's efforts to clean up pollution caused by past activities and to make the land at Fort McClellan available for reuse after the installation closes, the Army is investigating locations where it is known or suspected that chemical agents may have been used. Any items containing chemical agents that are discovered during the investigation efforts will be recovered and stored in the interim holding facility.*

Q: Is there any danger to the public?

A: *There is very little danger to the public during the recovery, onsite transport, or storage of these items. The items are being recovered from isolated areas of the installation and will be packaged inside of containers specially designed to contain chemical agents before they are brought to the storage facility which will be located at the Ammunition Supply Point which is surrounded by a fence.*

Q: What will happen to the items once they are recovered?

A: *As part of the recovery process, the Technical Escort Unit (highly trained experts in the handling of chemical agents) will assess the items to determine the contents. The assessment will be done using x-rays and other techniques that do not involve opening the items. Any items found to contain chemical agent will be packaged inside of leak-proof steel containers. The items will remain secured inside these containers for as long as they are stored at Fort McClellan.*

Q: How long will the recovered items be stored at Fort McClellan? Ultimately, what will happen to them?

A: *The ultimate disposition of the items is still being determined. The Army ultimately plans to destroy the items.*

Q: If the final disposition is not yet decided upon why are the items being dug up?

A: *Because Fort McClellan is being closed, the Army must clean up polluted areas of the installation to make them available for civilian use. It is considered safer to*

recover and store any chemical warfare materiel that is found than to leave it in the ground where people might accidentally come into contact with it.

Q: What government organizations are involved in this project?

A: *In addition to Fort McClellan, five other Army organizations will play a significant role in this project. The U.S. Army Corps of Engineers, Mobile District is the cleanup contractor. They are conducting the investigation for FTMC. The U.S. Army Engineering and Support Center, Huntsville will be conducting the investigation of sites on FTMC where chemical warfare materiel may be found. The Program Manager for Chemical Demilitarization is in charge of ensuring that recovered chemical warfare materiel is handled, transported, and stored in a manner that is safe to the public and the environment. The U.S. Army Technical Escort Unit is the group of Army experts who will actually perform the work of recovering the chemical warfare materiel, packing it into leak proof containers, and transporting it to the storage facility. Finally, the U.S. Army Edgewood Chemical Biological Center, in addition to providing laboratory services, will, together with the Technical Escort Unit, conduct monitoring to ensure worker and public safety.*

Q: Who can we contact for more information?

A: *For questions about the remedial investigation, contact the Fort McClellan Public Affairs Office, Mr. Hershel Chapman, 256-848-5574, chapmanh@mcclellan-emhz.army.mil, the Engineering and Support Center, Huntsville, Public Affairs Office, Mr. Bob DiMichele, 256-895-1691. For information about the storage and transport of chemical warfare materiel, contact the Project Manager for Non-Stockpile Chemical Materiel, Public Outreach and*

Information Office, Mr. Bob Jones, 800-488-0648 or, or e-mail rjones@c-pmcd.apgea.army.mil.

SECTION XX
U.S. ARMY TECHNICAL ESCORT UNIT (TEU) SUPPORT PLAN

XX.1 **PURPOSE.**

To outline the procedures to be used by U.S Army Technical Escort Unit (TEU) in support of remediation efforts at Fort McClellan, AL.

XX.2 **PROJECT TASKS.**

The statement of work identifies the task outlined the below tasks to be performed by TEU.

XX.2.1 Assume control of the site when suspect Chemical Warfare Material (CWM) is encountered.

XX.2.2 Use D2PC to determine the current NOSE daily.

XX.2.3 Assess suspect CWM material and munitions.

XX.2.4 Package suspect CWM material and munitions.

XX.2.5 Transport suspect CWM material and munitions.

XX.2.6 Perform continuous low-level air monitoring in the Exclusion Zone (EZ).

XX.3 **PERSONNEL.**

The personnel listed below will be utilized to perform the tasks identified above. The number of personnel may seem to be less than required, but it must be understood that most toxic material handlers at TEU are crossed-trained to do several different tasks.

XX.3.1 One Wage Supervisor maintains control of TEU assets and assume site control when suspect CWM is encountered.

XX.3.2 Two TEU EOD Specialist suspect chemical munitions assessment and destruction as necessary.

XX.3.3 Five Toxic Material Handlers packaging of suspect CWM material and munitions, PINS assessment, transport packaged material to the IHF, low-level (MINICAM) monitoring in the EZ, transport on order suspect CWM to its final destination.

NOTE: TEU personnel, while not performing their primary task, may assist the prime contractor with other duties. This coordination will be made between the wage supervisor and the contractors work leader. Examples of these duties are: provide rescue party, assist with soil sampling, and assist with range sweeps.

XX.4 **PROCEDURES.**

The procedures outlined below and subsequent attachments will be used to complete the tasks listed in paragraph XX.2.

XX.4.1 **Assume Control of the Site.**

The TEU wage supervisor (WS) will assume control of the site when it has been determined that suspect CWM or ammunition with a suspect fill has been encountered. The SSHO and the CENHC safety specialist will make this decision. The TEU WS will direct all activities until the suspect item has been assessed and packaged or properly disposed of. These actions will include but are not limited to:

XX.4.1.1 WS will dispatch a team to assess the item or hazard. PPE will be selected in accordance with the site health and safety plan or the suspected hazard. Munitions will be assessed by EOD personnel only. Non-munition items may be assessed by toxic material handlers.

XX.4.1.2 If a spill occurs a response team in the appropriate PPE will begin mitigation actions immediately.

XX.4.1.3 Suspect munitions or items will be packaged and transported to the IHF if safe to store.

XX.4.1.4 If the munitions or item is determined to be non-CWM it will be turned over to the contractor for proper disposal.

XX.4.2 Control of the site will returned to the SSHO when all necessary actions have been completed.

XX.4.3 D2PC modeling will utilize current weather conditions at the work site. The data input will be made by a trained operator only. In accordance with the procedures out lined in the D2PC and Hazard Analysis ,Reference Manual. The quantities and type of release data will be the maximum credible event (MCE). If actual quantities and type of release are available they will be used.

XX.4.4 **Assessment of Suspect Items and Munitions.**

Suspect munitions will be assessed using the procedures outlined in attachment 1 (EOD) and the Portable Isotopic Neutron Spectroscopy (PINS) procedures outlined in attachment 2. Suspect containers will be assessed utilizing the PINS procedures. Munitions or items which can be positively identified as non CWM will be turned over to the contractor for proper disposal. Munitions or items determined to be CWM will be packaged using the procedures outlined in attachment 3. ALL assessment teams will be dressed in the appropriate PPE as determined by the SSHO and the TEU WS.

XX.4.5 **Packaging of Suspect Items and Munitions.**

Munitions will be packaged only after they have been assessed and it has been determined that they are safe to transport and store. This decision will be made by the EOD team leader. Suspect munitions will be double bagged prior to placing it into the appropriate size MRC. Suspect containers will be cleaned and packaged as soon as practical. PINS assessment should be completed if possible prior to packaging if safety conditions permit. Bottles or vials will be packaged individually in fiberboard tubes with absorbable material and over packed in the appropriate MRC. Like items may be packed in the same container. The packaging procedures for the Multiple Round Containers (MRC) are outlined in attachment 3. Upon completion of packaging, the MRC will be labeled with the following information:

Date and time (e.g., year/month/day/time)
Description of contents (e.g., 12 ea CAIS vials, 4.2 in. mortar w/o fuze)
Location and number (e.g., SW corner SMU#00, #00-123)
Any additional Information (e.g., packed in vermiculite)

XX.4.6 Chain of custody will be established using DD Form 1911. When final analysis is completed, MRCs will be labeled for shipment.

XX.4.7 **Continuous Low-Level Air Monitoring in the EZ.**

TEU in conjunction with ECBC will monitor the excavation site within the EZ. Monitoring will be done using the MINICAM system. The procedures are outlined in the ECBC Monitoring Plan (Sec G SSHP).

XX.4.8 **EOD Assessment.**

- EOD RESPONSE TO ORDNANCE ITEMS

I COORDINATION. Upon arrival at the designated location, the EOD team leader will coordinate with the TEU WS and the USAESCH-Safety Specialist and notify the WS of departure down range.

2 EOUIPMENT. As a minimum, all EOD team members will have the following equipment on the vehicle.

a. Proper PPE as specified in the site health and safety plan or as dictated by the suspected hazard.
b. Protective mask
c. Toxicological Agent Protective (TAP) gloves
d. Body Armor and Kevlar Helmet
e. Eye protection
f. CPU'S, Tap Apron, Tap Boots

3 PROCEDURES:

a. Approach the item from an upwind direction, if possible.
b. Mark the site, preferably with a wind direction indicator (streamer).
c. Position your vehicle on the upwind direction, if possible.
d. Always use caution when approaching a UXO. Field glasses may be used to help identify an
UXO from a safe distance.
e. Prepare the site for easy access by follow-up teams. Indicate upwind avenues of approach, excavate large step trench to remove round, etc.

CAUTION: IF THE FILLER OF THE ITEM CANNOT BE IMMEDIATELY DETERMINED, ASSUME THE WORST HAZARD AND TAKE THE NECESSARY PRECAUTIONS. APPROPRIATE PPE WILL BE WORN WHEN HANDLING THE UXO. KEVLAR HELMENTS ARE NOT REQUIRED WHEN WEARING A MASK.

e. Take the necessary precautions listed in TM 6OA-1-1-22 AND TM 6OA-1-1-11 for the UXO encountered and refer to the attached Logic Tree.

(1) When working with White Phosphorus (WP):

(a) Have buckets and water on site in the event the munition starts smoking.
(b) Do not approach a smoking WP Munition. Burning WP may detonate the burster charge at any time.
(c) If it starts to smoke while you are with the item, fuze condition permitting, submerge a smoking WP munition **in** water or cover it with wet mud, sand, dirt, or foam as quickly and gently as possible, should it be necessary to handle such an item.
(d) The following personal protective equipment will be available when working with WP filled munitions:

- Leather gloves, loose fitting.
- Kevlar/face shield
- Flame retardant clothing.
- Flak Jacket.
- Protective mask.

(2) When working with incendiaries:

(a) Wear a protective mask or appropriate PPE when there is a possibility to inhale the smoke or fumes of burning pyrotechnics or incendiary materials.
(b) Protect eyes by looking away from the flame if visible exposure to burning pyrotechnics is probable,
(c) If incendiary has to be extinguished, use sand to smother. Do not use water. Water may induce hypergolic reactions or be completely ineffective.
(d) Bury incendiary loaded munitions in sand when transporting them. This will smother any fire which may start, until other corrective action can be taken.

(3) A protective mask or appropriate PPE will be worn in the areas where strong concentrations of screening smokes can develop. Strong concentrations of screening smokes generally irritate the eyes and respiratory tract.

g. The primary concern is the fuze. Once the fuze has been rendered safe or determined to be safe, attempt to determine the filler.

h. When performing initial reconnaissance on suspected items, perform the following functions provided that the performance of such does not expose personnel to additional and unnecessary risk.

(1) Photograph ordnance items that cannot be positively identified on first look. Take a minimum of two good photographs. Include a recognizable sizing guide (tape measure) near the item. Photograph the length and diameter. Take both pictures as close to the item as possible. All efforts will be made to ensure that the photographs cover the most pertinent identification features visible on the ordnance item.
(2) Measure the ordnance item. Recommended measurements are listed below:

(a) Overall length, including fuzing and fin assemblies.
(b) Overall width/diameter, including protruding areas, fins, etc.
(c) Width/diameter minus fins.
(d) Length minus fuze and fins.
(e) Length of fuze.
(f) Width of fuze.
(g) X-ray all areas of item, i.e. nose, **fuze,** body, and tail. (MARB Standards)

(3) Weigh the item in order to help determine its fill.

i. If the UXO is a conventional munition, proceed with the approved treatment procedures or transport to a safe holding area.

j. Proceed in accordance with procedures outlined in the site health and safety plan.

k. After performing UXO research, if the filler cannot be positively identified as conventional, the UXO will be treated as having a chemical fill. If the on-site team leader determines the munition is considered safe for storage, the munition will be overpacked IAW Attachment 3 and turned over to the proper facility. If the fuze type and condition warrant an on-site disposal procedure, explosive weight ratio will be at a minimum of 5 to 1. Before disposal procedures on a suspected chemical filler can be initiated by detonation or thermal destruction, formal approvals must be obtained by the SSHO from appropriate authorities.

- EOD RESPONSE TO ORDNANCE ITEMS

I COORDINATION. Upon arrival at the designated location, the EOD team leader will coordinate with the TEU WS and the USAESCH-Safety Specialist and notify the WS of departure down range.

2 EOUIPMENT. As a minimum, all EOD team members will have the following equipment on the vehicle.

a. Proper PPE as specified in the site health and safety plan or as dictated by the suspected hazard.
b. Protective mask
c. Toxicological Agent Protective (TAP) gloves
d. Body Armor and Kevlar Helmet
e. Eye protection
f. CPU'S, Tap Apron, Tap Boots

3 PROCEDURES:

a. Approach the item from an upwind direction, if possible.
b. Mark the site, preferably with a wind direction indicator (streamer).
c. Position your vehicle on the upwind direction, if possible.
d. Always use caution when approaching a UXO. Field glasses may be used to help identify an
UXO from a safe distance.
e. Prepare the site for easy access by follow-up teams. Indicate upwind avenues of approach, excavate large step trench to remove round, etc.

CAUTION: IF THE FILLER OF THE ITEM CANNOT BE IMMEDIATELY DETERMINED, ASSUME THE WORST HAZARD AND TAKE THE NECESSARY PRECAUTIONS. APPROPRIATE PPE WILL BE WORN WHEN HANDLING THE UXO. KEVLAR HELMENTS ARE NOT REQUIRED WHEN WEARING A MASK.

e. Take the necessary precautions listed in TM 6OA-1-1-22 AND TM 6OA-1-1-11 for the UXO encountered and refer to the attached Logic Tree.

(1) When working with White Phosphorus (WP):

(a) Have buckets and water on site in the event the munition starts smoking.
(b) Do not approach a smoking WP Munition. Burning WP may detonate the burster charge at any time.
(c) If it starts to smoke while you are with the item, fuze condition permitting, submerge a smoking WP munition **in** water or cover it with wet mud, sand, dirt, or foam as quickly and gently as possible, should it be necessary to handle such an item.
(d) The following personal protective equipment will be available when working with WP filled munitions:

- Leather gloves, loose fitting.
- Kevlar/face shield
- Flame retardant clothing.
- Flak Jacket.
- Protective mask.

(2) When working with incendiaries:

(a) Wear a protective mask or appropriate PPE when there is a possibility to inhale the smoke or fumes of burning pyrotechnics or incendiary materials.
(b) Protect eyes by looking away from the flame if visible exposure to burning pyrotechnics is probable,
(c) If incendiary has to be extinguished, use sand to smother. Do not use water. Water may induce hypergolic reactions or be completely ineffective.
(d) Bury incendiary loaded munitions in sand when transporting them. This will smother any fire which may start, until other corrective action can be taken.

(3) A protective mask or appropriate PPE will be worn in the areas where strong concentrations of screening smokes can develop. Strong concentrations of screening smokes generally irritate the eyes and respiratory tract.

g. The primary concern is the fuze. Once the fuze has been rendered safe or determined to be safe, attempt to determine the filler.
h. When performing initial reconnaissance on suspected items, perform the following functions provided that the performance of such does not expose personnel to additional and unnecessary risk.

(1) Photograph ordnance items that cannot be positively identified on first look. Take a minimum of two good photographs. Include a recognizable sizing guide (tape measure) near the item. Photograph the length and diameter. Take both pictures as close to the item as possible. All efforts will be made to ensure that the photographs cover the most pertinent identification features visible on the ordnance item.
(2) Measure the ordnance item. Recommended measurements are listed below:

(a) Overall length, including fuzing and fin assemblies.
(b) Overall width/diameter, including protruding areas, fins, etc.
(c) Width/diameter minus fins.
(d) Length minus fuze and fins.
(e) Length of fuze.
(f) Width of fuze.
(g) X-ray all areas of item, i.e. nose, **fuze,** body, and tail. (MARB Standards)

(3) Weigh the item in order to help determine its fill.

i. If the UXO is a conventional munition, proceed with the approved treatment procedures or transport to a safe holding area.

j. Proceed in accordance with procedures outlined in the site health and safety plan.

k. After performing UXO research, if the filler cannot be positively identified as conventional, the UXO will be treated as having a chemical fill. If the on-site team leader determines the munition is considered safe for storage, the munition will be overpacked IAW Attachment 3 and turned over to the proper facility. If the fuze type and condition warrant an on-site disposal procedure, explosive weight ratio will be at a minimum of 5 to 1. Before disposal procedures on a suspected chemical filler can be initiated by detonation or thermal destruction, formal approvals must be obtained by the SSHO from appropriate authorities.

LOGIC TREE

Inspect Item
↓
Suspect Chemical → (NO) High Explosive (HE) Response
↓ (YES)
Safe to Handle → (NO) Perform RSP ↓
↓ ← After RSP ←
Bag Item
↓
Package Item (approved DOT container) MRC
↓
Transport to IHF
↓
Continue Assessment (PINS)
↓
Chemical → (NO) HE/Other
↓ (YES)
IHF & Transport
↓
To Disposal ← ← ←

XX.4.9 **PINS Assessment.**

U.S. ARMY TECHNICAL ESCORT UNIT
ABERDEEN PROVING GROUND, MD 21010-5423

RADIATION SAFETY PROGRAM FOR THE USE OF THE PORTABLE ISOTOPIC NEUTRON SPECTROSCOPY (PINS)

SOP 385-11

5 January 1995

1. Purpose. To establish standardized operating procedures, policy and responsibilities to assure maximum safety in the use, handling, storage and disposal, of the Portable Isotopic Neutron Spectroscopy (PINS).

2. Scope. This procedure is applicable to all U.S. Army Technical Escort Unit (USATEU) personnel authorized to operate the PINS.

3. Definitions (See Glossary).

4. Policy.

a. Use of the PINS is authorized under the U.S. Army Test, Measurement, and Diagnostic Equipment Activity (USATA) Nuclear Regulatory Commission license. Movement of the PINS shall be coordinated through the Chief, Plans, training, and Operations (S-3), U.S. Army Technical Escort Unit, (USATEU), Aberdeen Proving Ground, MD, DSN 584-4384 or commercial (410) 671-4384, and the U.S. Army Test, Measurement, and Diagnostic Equipment Activity (USATA) Radiation ~~Control~~ Staff Safety Officer (~~RCO~~ RSO). (Notification may be made by telephone but shall be followed by written notification DSN 746-8825/1987, or commercial (205) 876-8825/1987.) Written notification can be accomplished by FAX: DSN 645-6413 or commercial (205) 955-6413, or electronic mail: atarco@redstone-emh2.army.mil.

b. The PINS will be secured when not in use or when neither the ~~RPO~~ (RSO) or the alternate is not on duty.

** c. Only personnel who have been designated in writing by the RPO or alternate are authorized to work in the controlled area. Persons under 18 years of age and females declared to be pregnant are prohibited from entering this area.

d. Visitors will be escorted by the RPO or alternate.

e. The restricted area will be posted with a "CAUTION RADIATION AREA" sign in accordance with ~~AR 385-30~~ 10 CFR 20.203(c).

f. All radiation workers will receive a pre-employment and a termination physical in accordance with AR ~~40-14~~ 40-5 paragraph 5-7.

g. Personal dosimeters will be worn in accordance with requirements of DA, AR 40-14 at all times by personnel working within the restricted area. Personal dosimeters are not required for visitors unless they will be working within the restricted area where they are likely to receive a radiation dose in excess of the limits specified in AR 40-14. Delete

h. The Radiation Control Office, USATA (~~AMXTM-SR~~ AMSAM-TMD-SR) will serve as the POC for all radiological issues concerning the PINS and the NRC license.

j. Eating, drinking, smoking, storage or use of food, beverages, tobacco, and cosmetics are prohibited in the controlled or storage areas.

k. Radiation protection records will be maintained in accordance with AR 25-400-2.

l. Not used.

m. Inventory of radioactive materials will be maintained in accordance with AR ~~385-11~~ 11-9.

5. <u>Responsibilities:</u>

a. USATEU Commander Will:

(1) Issue letter orders appointing ~~LRPO~~ RSO and ~~ARPO's~~ ARSO. A copy of the letter order and training certificate shall be submitted to the ~~Rec~~ USATA ~~(AMXTM-SR)~~ RSO (AMSAM-TMD-SR), Redstone Arsenal, AL 35898-5400 for concurrence and inclusion into the centralized radiation protection files.

(2) Assure ~~that~~ this procedure and all pertinent regulatory requirements are adhered to in order to promote proper radiation safety.

(3) Designate a person in writing to be responsible for preparing and maintaining the radiation exposure records (Automated Dosimetry System and DD Form 1952) in accordance with AR 40-14. This includes records of bioassay, pocket dosimeters, etc.

b. LRPO is responsible for the following:

(1) Ensuring that the PINS is used in a controlled area in a safe manner in accordance with this SOP.

(2) Posting the restricted area in accordance with AR 385-30. From the definition in AR 385-30, the entrances to the controlled area requires the "CAUTION RADIATION AREA" signs while the storage area only requires the "CAUTION RADIOACTIVE MATERIALS."

(3) Providing personal dosimeters for radiation workers in accordance with SB 11-206 and AR 40-14, and maintaining control of dosimeters to prevent access to dosimeters by unauthorized personnel.

(4) Performing quarterly review of personnel radiation exposure records (DD Form 1141 or Automated Dosimetry System) in accordance with AR 40-14.

(5) Approving in writing the storage location for the personnel dosimeter in accordance with AR 40-14.

(6) Conducting semi-annual inventory and periodic update as required of radioactive items in accordance with ~~AR 385-11~~, AR 11-9 and maintaining a file copy and providing a copy to the USATA Radiation Safety Office.

(7) Advising and coordinating with USATA Radiation Safety Office on any impending change to the current inventory of radiation sources.

(8) Conducting the required leak test on the PINS at least once every 6 months.

(9) Providing written notification to the local fire department of the type(s) and location(s) of radioactive material(s) in accordance with AR ~~385-11~~. 11-9

(10) Providing annual briefing to radiation workers regarding radiation hazards and biological effects of ionizing radiation.

(11) Maintaining records of requisitions, receipts, transfers and disposal of radioactive items in accordance with ~~AR 385-11~~. AR 11-9.

(12) Assuring survey meters are marked (ACTIVE) and calibrated at intervals specified in TB 43-180 for HEALTH AND SAFETY INSTRUMENTS. (Documentation of calibration of survey meters shall be maintained on file IAW AR 25-400-2)

(13) Providing and documenting required training for operator/users of the RADIAC calibrators.

(14) Conducting and documenting radiological surveys of the restricted and storage areas at least monthly.

(15) Investigating each case of excessive or abnormal exposure in accordance with AR 40-14 and reporting the results to the installation ~~RPO~~ RSO and the USATA ~~RPO~~ RSSO. Referring any actual or suspected overexposure to the local medical authority.

AMSAM-TMD-SR

(16) Instructing radiation workers of the proper use of protective clothing and proper decontamination procedures when handling radioactive materials. Providing required safety equipment and supplies to personnel working with radiological materials and for the decontamination of radiologically contaminated items.

(17) Posting the required notices and documents where they may be observed by the workers.

(18) Securing all radioactive material when not in use to preclude use or removal by authorized personnel. Prior to being relieved from duty assignment, transfer control of the PINS to an authorized (qualified) individual or secure the PINS and notify the USATA Radiation Safety Office.

c. The alternate ~~RPO~~ RSO ~~shall~~ should assist the ~~LRPO~~ LRSO in the performance of ~~his~~ duties and act on behalf of the ~~LRPO~~ LRSO ~~in his~~ when deemed ab~~sence~~. necessary by the RSO.

d. Operating Personnel

(1) All operating personnel working with the PINS or working within the restricted area as described herein shall be familiar with this SOP and ensure that all work is conducted in accordance with the provision thereof.

(2) Additional instruction given by the ~~LRPO~~ LRSO or alternate ~~LRPO~~ LRSO in the interest of radiation safety will be followed.

(3) Each radiation worker is responsible for wearing and accounting for his or her personal dosimeter.

(4) Each person is responsible for obtaining and using the required safety equipment (survey instruments, disposable gloves, extension tongs).

(5) Any unusual occurrence or accident which involves or potentially involves radioactive material must be reported to the ~~LRPO~~ LRSO.

6. Operating Procedures.

a. Use. The PINS shall be utilized in accordance with the applicable technical manual and in accordance with the conditions of the USATA Nuclear Regulatory Commission License.

b. Receipt, Transfer, and Disposal.

(1) The PINS will be inspected for damage after each shipment by the Technical Escort RPO. PINS shipments returning from ON-SITE inspections will be evaluated prior to being placed in storage. Damaged devices shall be reported immediately to the USATA Radiation Safety Office. The inspection will consist of monitoring the package with an appropriate survey instrument and an evaluation for removable contamination. The evaluation will be performed as soon as practicable after receipt, but no later than 3 hours after the package is received if received during normal working hours, or 18 hours if received after normal working hours. The evaluation will consist of monitoring the package with an appropriate survey instrument and an evaluation for removable contamination. Contamination smears will be submitted to USATA for analysis.

(2) The Technical Escort ~~RPO~~ RSO will also notify the USATA Radiation Safety Office if radiation levels on the external surface of the package are found to be in excess of 200 millirem per hour, or at three feet from the external surface of the package in excess of 10 millirem per hour.

(3) Package shipments will also be evaluated upon arrival at remote site locations. Contamination smears will be evaluated with the appropriate calibrated survey instrument. If the evaluations determines that the removable contamination is below 50 cpm the PINS can be used; however, PINS having removable contamination levels above 50 cpm will not be used. If the remote site is located in CONUS, the site ~~RPO~~ RSO will ship the smears by express mail to the USATA for analysis. If the remote site is in OCONUS, the site ~~RPO~~ RSO will collect and hold all smear samples until the team returns to Technical Escort Headquarters. The smear samples will then be submitted to the USATA for analysis.

(4) The PINS shall only be shipped under the guidance given in Appendix C. A Radioactive Material Movement Information worksheet (Appendix D) will be completed prior to each shipment of the PINS. A copy of the completed document will be forwarded to the USATA ~~RCO~~ RSSO.

(5) An instrument survey will also be performed during remote site inspections. If the radiation levels on the external surface of the package are found to be in excess of 200 millirem per hour, or at three feet from the external surface of the package in excess of 10 millirem per hour, the PINS will not be used. The USATA Radiation Safety Office will be notified as soon as possible when such an incident occurs.

(6) Requisition and transfer documentation shall be retained on file IAW AR 25-400-2.

(7) Documentation of the survey and contamination surveys of each outgoing package must be maintained on file. All packaging, marking, and labeling requirements commensurate with 49 CFR 172, 173, and AR ~~385-11~~ 1959 must be satisfied. A copy of documents must be maintained by owner.

c. Security and Storage.

(1) During onsite inspections, the team ~~RPO~~ RSO is responsible for insuring that the PINS is properly stored and secured when not in use. The source will be stored in its Department of Transportation (DOT) approved shipping container.

(2) The PINS shall be stored in areas set aside for the secure storage of radioactive material only. Such an area will be free from the danger of flooding and outside the danger radius or flammables or explosives.

(3) Inspection teams required to move to another location during an onsite inspection will insure that the PINS is stored in a secure area during movement. The PINS will be considered under the control of the team ~~RPO~~ RSO during such a move. Upon arrival at the new location an inventory will be performed to verify that security was not breached.

(4) No maintenance or tampering will be allowed on the PINS.

d. Posting of Notices to Workers.

(1) Posting of notices to workers will be in accordance with Title 10, CFR Parts 19, 20, and 21.

(2) The following documents will be posted in a conspicuous location to permit individuals engaged in RADIAC operations to observe them on the way to and from the RADIAC area:

(a) Standard Operating Procedures

(b) Form NRC-3, Notice to Employees

(c) Section 206 of the Energy Reorganization Act of 1974.

(d) Title 10 CFR Parts 19, 20, and 21.

(e) A copy of the USATA Nuclear Regulatory Commission License or the following statement:

The U.S. Nuclear Regulatory Commission Licenses and related documents appropriate to the use of the PINS are available for review at the On-Site Inspection Agency. Per[illegible] may also examine information concerning these documents by contacting the

Director
U. S. Army Test, Measurement, and Diagnostic Equipment Activity
ATTN: ~~AMXTM-SR~~ AMSAM-TMD-SR
Redstone Arsenal, AL 35898-5400

or requests for further information concerning these licenses or documents may be made by phone by calling DSN 746-8825/1987, Coml (205)876-8825/1987.

(3) The following documents must be maintained on file for easy reference.

(a) All TB's and TM's for radioactive devices on hand.

(b) AR 40-14 Control and Recording Procedure for Exposure to Ionizing Radiation and Radioactive Materials.

(c) ~~AR 385-11, Ionizing Radiation Protection (Licensing, Control, Transportation, Disposal, and Radiation Safety).~~ AR 11-9, The Army Radiation Safety Program.

(d) NRC Regulatory Guide 8.10, Operating Philosophy for Maintaining Occupational Radiation Exposures As Low As Is Reasonably Achievable.

(e) NRC Regulatory Guide 8.13, Instructions Concerning Prenatal Radiation Exposure.

(f) NRC Regulatory Guide 8.29, Instructions Concerning Risks from Occupational Radiation Exposure.

(g) DA Authorizations, Letter Orders, Training Documents, Administrative and Technical Guidelines, etc.

e. Personal Dosimetry.

(1) Thermoluminesent Dosimeters (TLD) will be provided to team personnel during each inspection. Dosimeters will be collected after completion of each inspection visit and submitted to the ~~U.S Army Ionizing Radiation Dosimetry Center, Lexington, KY~~ U.S. Army TMDE Activity, ATTN: AMSI-TMDE-SR-DD, Bldg 5417, Redstone Arsenal, AL 35898-5400 for analysis.

(2) Personal dosimeters must be used in accordance with ~~AR 40-14~~ DA Pam 40-18, and maintained in the metal lock box provided during

periods of non-use.

(3) Occupational radiation exposures will be maintained as low as reasonably achievable in accordance with NRC Regulatory Guide 8.10.

f. Protective Equipment.

(1) No special protective clothing or gloves are required when handling the PINS.

(2) A remote handling device will be used when moving the radioactive source.

(3) Occupational radiation exposures will be maintained as low as reasonably achievable in accordance with NRC Regulatory Guide 8.10.

g. Surveys.

(1) All radiation surveys will be made using an "active" survey meter which has been calibrated in accordance with ~~TB 43-~~ 180, TB 750-25, AND TB 43-100.

(2) The PINS and each working area will be surveyed at the conclusion of each working day. Each survey will be documented and maintained on file.

(3) All personnel working with or handling radioactive materials will monitor themselves and will wash their hand immediately after leaving the radiation work area.

(4) A survey of each area in which sources of radiation are stored will be performed monthly using a portable survey meter. Results of these surveys will be documented and maintained on file.

(5) Shipments of radioactive material must be monitored with a portable survey meter and results documented with a copy to the local transportation officer.

h. Leak Tests.

(1) A leak test will be performed on every radioactive source at least once every six months.

(2) If the PINS is shipped to an On-Site location during the last two months of a leak test cycle, it should be leak tested prior to the shipment.

(3) A leak test will also be performed after the completion of an onsite inspection.

(4) Leak test results must be documented and retained on file.

i. ALARA Program.

(1) The commander of USATEU shall be committed to the program prescribing to keeping individual and collective exposures as low as is reasonably achievable (ALARA).

(2) Enforcement of the ALARA program will be the responsibility of the ~~LRPO~~ LRSO. The ~~LRPO~~ LRSO will achieve this through program reviews and education programs for the radiation workers.

(3) Educational responsibilities will be conducted as follows:

(a) The ~~LRPO~~ LRSO will schedule briefings and educational sessions to inform workers of ALARA program efforts.

(b) The ~~LRPO~~ LRSO will ensure that workers and ancillary personnel who may be exposed to radiation receive instructions concerning the ALARA philosophy and management's commitment.

(4) The ~~LRPO~~ LRSO will review the personnel dosimetry records quarterly to verify that individual and collective exposures are maintained below established investigational levels. A copy of the quarterly reviews will be maintained on file in the unit's radiation protection files.

(5) An annual review of the ALARA program will be submitted to the USATA ~~RCO~~ RSSO. The review will include a summary of the quarterly individual and collective exposures and reports concerning excesses to the ALARA levels.

(6) The ~~LRPO~~ LRSO shall investigate all exposures that exceed either Level I or Level II and document the results. Documentation shall include statements from the individual, LRPO evaluation of the investigation, and recommendations. Level I investigations shall be maintained on file in the activities radiation protection files in accordance with AR 25-400.

(7) The USATA RCO will be notified immediately when LRSO investigational level II is exceeded. The ~~RCO~~ RSSO will provide the ~~LRPO~~ with instructions concerning a LEVEL II investigation. A copy of the Level II investigations shall be forwarded to the USATA RCO and shall be maintained on file in the USATA radiation protection files in accordance with AR 25-400.

(8) Investigational limits are listed in Table 1 below.

TABLE 1

ALARA INVESTIGATIONAL LEVELS

	Investigational levels (mrem per calendar quarter) LEVEL I	LEVEL II
Deep Dose (Whole Body)	125	250
Eye Dose	375	750
Skin Dose	1250	2500
Extremity Dose	1250	2500
Organ Dose	1250	2500

j. Waste Disposal.

(1) Any radioactive waste generated will be stored in a plastic bag inside a container appropriately marked for radioactive contaminated material in accordance with AR 385-30.

(2) An inventory list will be maintained on waste present in the designated container.

(3) Records of waste disposal will be maintained and disposal will be coordinated with the installation RPO in accordance with AR ~~385-11~~. 11-9

(4) Technical assistance may be obtained from USATA RCO, Redstone Arsenal, AL (DSN 746-1987/8576).

7. Emergency Procedures.

a. In the event that a radioactive source is damaged or suspected of leaking, the device will be isolated and the local RPO and USATA ~~RCO~~ RSSO will be notified.

b. Personnel not directly involved in contamination containment and clean-up will vacate the affected area to prevent unnecessary personal contamination.

c. The contaminated area will be secured to prevent unauthorized entry.

d. Personnel who may have been contaminated will not leave the area until monitored for contamination of skin and clothing.

e. Procedures for containment and decontamination of radioactive material provided in AMC 385-25 will be followed.

f. Whenever personnel are injured during any radiation accident, the post medical officer will be notified as soon as possible. Radiation accidents / incidents must be Reported to the RSO immediately.

g. Personnel with minor wounds will be decontaminated prior to leaving the controlled area. In the event the person must be transported immediately for medical treatment, precautions will be taken to prevent the spread of contamination by the individual. The ~~LRPO~~ LRSO or alternate ~~LRPO~~ LRSO will accompany the injured person to the medical center and will carry the appropriate survey meter for monitoring the level of contamination. Procedures indicated in paragraph 7e above will be followed.

h. Personnel incurring radiation injury will not be allowed to return to duty until approvement of such is obtained by the attending physician and the ~~LRPO~~ LRSO.

i. Decontaminated areas must be surveyed and approved for reentry by the ~~RPO~~ RSO prior to reoccupying the area.

j. In the event of a fire, immediately notify the local Fire Department. If possible radioactive devices should be removed to a safe area.

k. In the event that a radioactive source is involved in a fire, personnel shall remain upwind from the source. All windows and doors to the immediate area must be closed, and ventilation and air systems shall be turned off.

l. Not used.

m. Personnel must take every precaution to avoid exposure to potential airborne contaminants such as smoke, mist, dust, fumes, or other visible gases.

n. A determination of the cause of any accident/incident will be made by the ~~LRPO~~ LRSO and a full report filed with the USATA ~~RPO~~ RSSO IAW AR 385-40 within 15 days thereafter. Reports shall contain the following information:

(1) Name of reporting organization.

(2) Location and type of incident.

(3) Source of ionizing radiation (radioisotope, quantity, etc.)

(4) Name and SSN of injured, contaminated, or overexposed personnel.

(5) Chronological description of the incident from occurrence to resolution.

(6) Individual account of the incident as it relates to each person indicated in (4) above.

(7) Steps to be taken to prevent recurrence.

o. The ~~RPO~~ RSO will arrange for special processing of dosimetry badges worn by individuals who are known to have received to are suspected to have received external exposure exceeding the limits specified in AR 40-14.

p. Telephone numbers for emergency assistance personnel are as follows:

MEDICAL ASSISTANCE:

MILITARY POLICE:

FIRE DEPARTMENT:

Tech Escort ~~RPO~~ RSO: 410-~~612~~ 436-8532

USATA ~~RCO~~ RSSO: DSN: 746-8825/1987
Coml: (205)876-8825/1987
FAX DSN: 645-6413.
FAX Coml: (205) 955-6413
e-mail: atarco@redstone-emh2.army.mil

8. References.

a. AR 40-5 - Medical Services - Health and Environment

b. AR 40-14 - Medical Services - Control and Recording Procedures for Occupational Exposure to Ionizing Radiation

c. AR ~~385-11~~ 11-9 - ~~Safety Ionizing Radiation Protection (Licensing, Control, Transportation, Disposal, and Radiation Safety)~~ THE Army Radiation Safety Program

d. AMC 385-25 - Safety - Radiation Protection

e. AR 385-30 - Safety - Color Code Markings and Signs

f. AR 385-40 - Safety - Accident Reporting and Records

g. AR 700-64 - Radioactive Commodities in the DOD Supply Systems

h. NRC Regulatory Guide 8.10 - Operating Philosophy for Maintaining Occupational Radiation Exposure as Low as is Reasonably Achievable.

i. NRC Regulatory Guide 8.13 - Instruction Concerning Prenatal Radiation Exposure.

j. NRC Regulatory Guide 8.29 - Instruction Concerning Risks from Occupational Radiation Exposure.

k. MIL STD 129J - Military Standard - Marking for Shipping and Storage

l. Not used.

m. SB 11-206 - Film Badge Supply and Service

n. TB 9-6665-285-15 - Army Calibration Program for RADIAC Survey Meters.

o. TB 11-6665-227-12 - Safe Handling, Storage, and Transportation of Calibrator Set, RADIAC AN/UDM-2

p. TB 43-180 - Calibration and Repair Requirements for the Maintenance of Army Material.

q. TB 750-242-3 - Inspection and Certification of RADIAC Dosimeters

r. TM 3-261 - Handling and Disposal of Unwanted Radioactive Material

s. TM 3-6665-312-30 & P - Direct Support Maintenance Manual for the M8A1 Automatic Chemical Agent Alarm

SHELDON A. ORR
TEU RPO

KERTIS D. PETERSON
LTC, CM
Commanding

6 Mar 95

GREGORY R. KOMP
Radiation Control Officer
U.S. Army TMDE Activity

GLOSSARY

a. ALARA. ("as low as is reasonably achievable") means making every reasonable effort to maintain exposures to radiation as far below the dose limits in this part as is practical consistent with the purpose for which the licensed activity is undertaken, taking into account the state of technology, the economics of improvements in relation to benefits to the public health and safety, and other nuclear energy and licensed materials in the public interest.

b. Airborne Radioactive Material. Any radioactive material dispersed in the air, in the form of dust, fumes, mists, vapors, or gases.

c. Ionizing Radiation. Electromagnetic or particulate radiation capable of producing ions directly or indirectly, in its passage through matter. For the purpose of this SOP, ionizing radiation refers to alpha particles, beta particles, neutron particles, gamma rays and x-rays.

d. Radiation Area. An area in which a major portion of the body could receive a radiation dose of 5 millirem of more in any one hour or a radiation dose of 100 millirem or more in any 5 consecutive days.

e. High Radiation Area. Any area, accessible to personnel, in which there exists radiation at such levels that a major portion of the body could receive in an hour a dose in excess of 100 millirem.

f. Radiation Incident. The unplanned loss of control of radioactive material. Incidents may be caused by such events as fire, explosion, loss theft, or enemy action.

g. Radiation Worker. An individual whose work is performed in a restricted area and whose duties may involve exposure to ionizing radiation.

h. Radioactive Material. Any material or combination of materials which spontaneously emits ionizing radiation. NOTE: Radioactive materials, as referenced above, include natural elements such as radium, accelerator-produced radionuclides and NRC licensed material.

i. Radioactive Waste. Includes the following:

(1) Property which has become contaminated to the

extent that decontamination is economically unsound.

(2) Surplus radioactive material whose sales, transfer, or donation is prohibited.

(3) Surplus radioactive material which is determined to be unwanted after having been advertised as being surplus.

(4) Waste, which is radioactive, resulting from production, possession, or use of radioactive material.

j. Radiation ~~Protection~~ Safety Officer ~~(RPO)~~ RSO. An individual who is designated by the Commander/Director of the activity to provide consultation and advice on the degree of hazards associated with ionizing radiation and on the effectiveness of measures to control these hazards. This individual shall be qualified technically by virtue of education, training and experience commensurate with the type and hazard if the radiation source(s) for which he will be responsible. The term "Radiological ~~Protection~~ Safety Officer" is not intended to denote commissioned status. (The 40-hour Operational Radiation Safety Course qualifies the individual for appointment as ~~RPO~~ RSO).

k. Restricted Area. Any area, access to which is controlled by the licensee/authorized user for purposes of protection of individuals from the exposure to radiation of radioactive materials.

l. Radiation Safety Staff Officer. An individual who is designated by the MACOM Commander to manage the MACOM Radioactive Material Control Point (RMCP) and oversee the operation of the Radiation Safety Program conducted by subordinate installation commands

APPENDIX A

Radiation Accident/Incident

Notification Tree

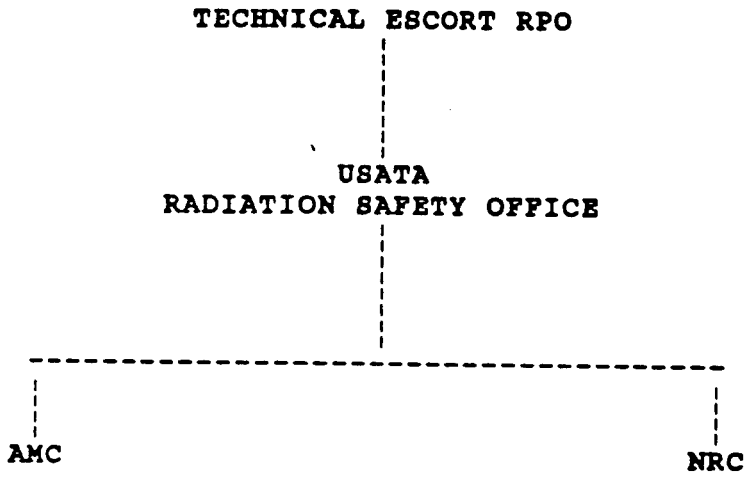

APPENDIX B

PINS OPERATING SYSTEM

PINS Chemical Assay System

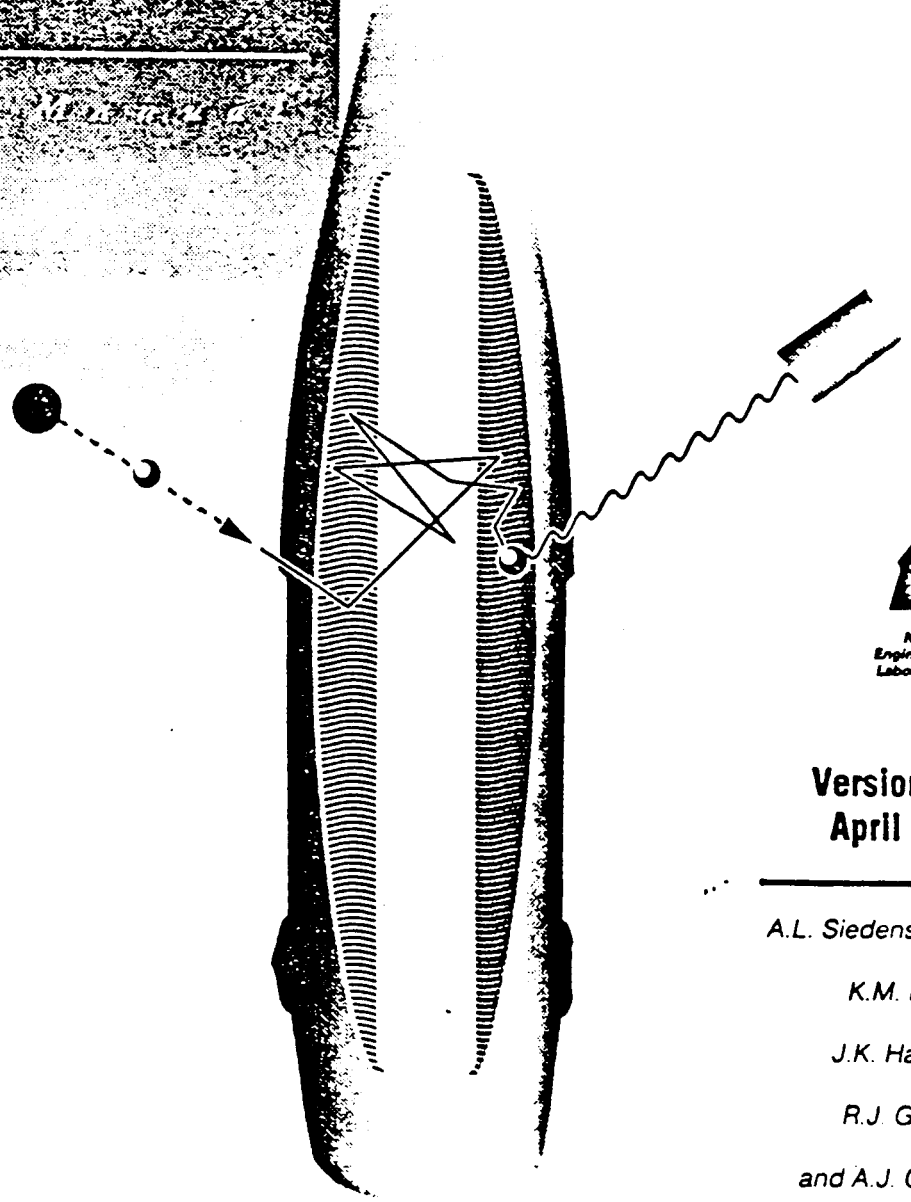

Idaho National Engineering Laboratory

Version 2.1
April 1994

A.L. Siedenstrang,

K.M. Krebs,

J.K. Hartwell,

R.J. Gehrke,

and A.J. Caffrey

EG&G - PHY-10389

Acknowledgments

We thank our INEL colleagues Jerry Cole, Reg Greenwood, Gypsy Jones, Gary McLaughlin, Mike Oates, Alan Preszler, Marie Putnam, Kevin Watts, Wu Yoon, and John Zabriskie for their expert assistance to the PINS project.

This work was supported by the Office of Arms Control, U.S. Department of Energy, under Field Office Idaho contract no. DE-AC07-76-1570.

Disclaimer

This manual was prepared as an account of work sponsored by an agency of the United States Government. Neither the United States Government not any agency thereof, nor any of their employees, makes any warranty, express or implied, or assumes any legal liability or responsibility for the accuracy, completeness, or usefulness of any information, apparatus, product or process disclosed, or represents that its use would not infringe privately owned rights. References herein to any specific commercial product, process, or service by trade name, trademark, manufacturer, or otherwise, does not necessarily constitute or imply its endorsement, recommendation, or favoring by the United States Government or any agency thereof. The views and opinions of authors expressed herein do not necessarily state or reflect those of the United States Government or any agency thereof.

Contents

Overview i

Simplified PINS Operation iii

Chapter 1: Safety

A. Cryogenic safety 1
B. Electrical safety 2
C. Radiation safety 2
D. General safety concerns 3

Chapter 2: Set-up

A. Preliminary preparations 5
B. Electronics set-up 7
C. Assay configuration 9
D. Detector and source placement 10

Chapter 3: Assaying a Sample

A. Collecting data 11
B. Saving data 14
C. Analyzing data 14
D. Continuing an assay 15
E. Recording data manually 16
F. Beginning the next assay 16
G. Shutting down the PINS system 16

Chapter 4: Computer Operations

A. General PC usage 17
B. PC shortcuts 17
C. Manual calibration 18

Chapter 5: Care and Maintenance

A. Detector care 23
B. Protecting cables 24
C. MCA and PC Maintenance 24
D. Battery charging 24
E. Storing and transporting the radioactive source 24

Chapter 6: Common Operation Problems

A. Powering the MCA 25
B. Acquisition of spectra 26
C. Archiving spectra 26

Appendices

A. Elemental composition, in weight %, of CW agents, typical military high explosives, and military smokes 27
B. Simplified decision tree 28
C. Energy and relative intensity of selected capture gamma rays, ordered by element 29
D. Energy and relative intensity of selected neutron inelastic scattering gamma rays, ordered by element 30
E. Selected neutron capture and neutron inelastic scattering gamma rays, ordered by energy 31
F. Sample logbook page 34

Index 35

Figures and Tables

Figure 2A: Mother dewar and detector 6
Figure 2B: Field set-up 7
Figure 2C: Detector and shadow shield configuration 9
Figure 3A: Acquire menu 11
Figure 3B: Maestro screen with assay in progress 13
Figure 3C: 92X Control menu 15
Figure 3D: Sample logbook entry 16
Figure 4A: Full view of a spectrum 19
Figure 4B: Expanded view of an iron doublet 20
Figure 4C: Expanded view of a hydrogen peak 20

Table 2A: Equipment Inventory 5
Table 3A: Recommended assay lengths 12
Table 4A: Keyboard shortcuts 22

Overview

All chemical compounds, including high explosives and chemical warfare agents, are composed of two or more elements. For example, high explosives contain, among other elements, hydrogen and nitrogen; mustard gas is made in part of hydrogen, chlorine, and sulfur. The contents of artillery shells or storage containers can be identified by analyzing their chemical elements.

When a chemical element's nucleus inelastically scatters or captures a free neutron, it emits gamma rays that are unique to that element, much like a signature or fingerprint is unique to an individual. By making free neutrons available and characterizing the resulting gamma rays, the Portable Isotopic Neutron Spectroscopy (PINS) system identifies the elements within a munition, thereby disclosing the contents without drilling the casing or handling the chemicals inside.

The presence and relative concentration of a given chemical element can be inferred from the characteristic gamma-ray peaks in the energy spectrum.

In order for the PINS system to identify chemical agents, these energy peaks must be matched to known energy peaks for certain elements. Therefore, an energy calibration is an important function of the PINS system, since it ensures that the system is accurately recording the energies of the elements of interest such as hydrogen, chlorine, sulfur, phosphorus, and iron.

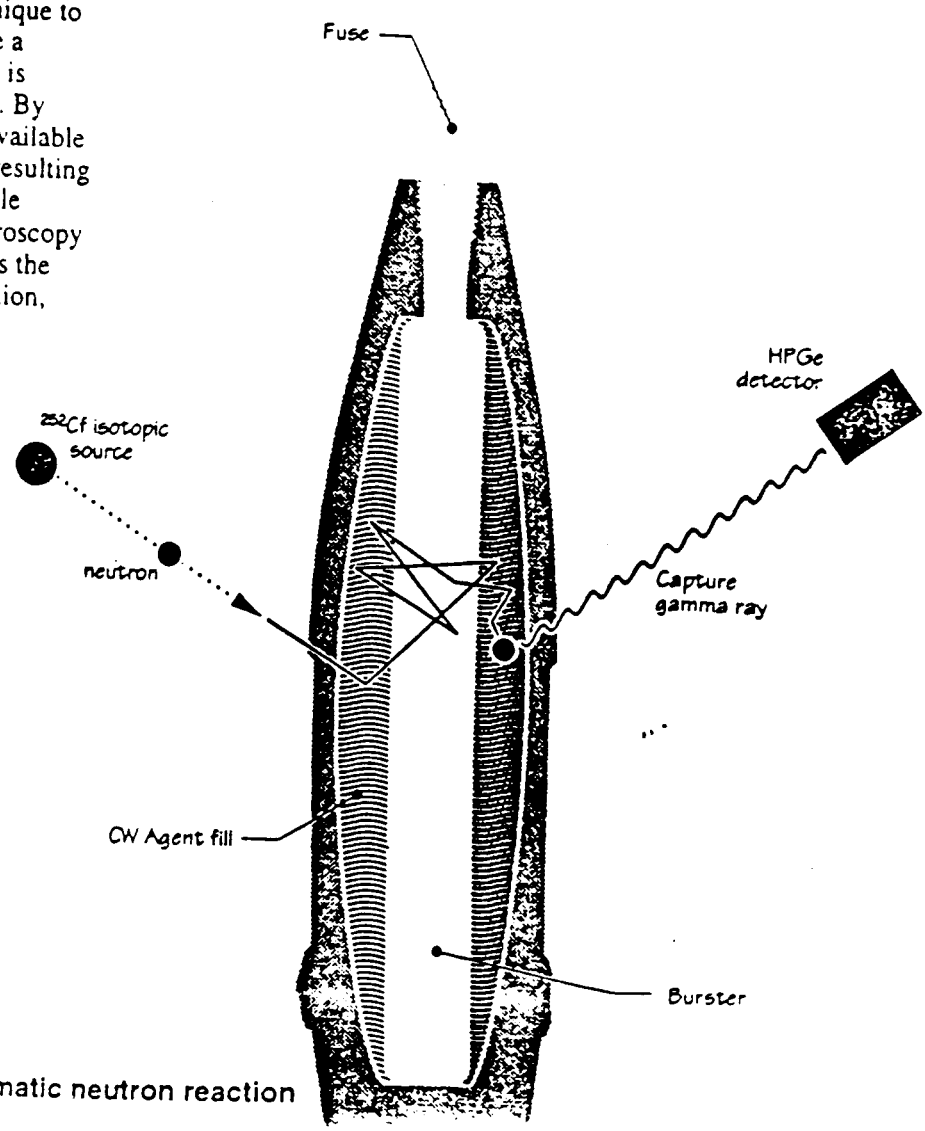

Figure 1A: PINS schematic neutron reaction

The PINS system

The PINS system uses three major pieces of equipment: a neutron source, a gamma-ray detector, and the electronics assembly/multichannel analyzer.

The **neutron source**, californium-252 (^{252}Cf), is placed near the munition being surveyed. Each second, approximately one million neutrons are emitted by the source, some of which penetrate the casing of the munition and interact with the contents. The source is placed in a polyethylene cube, or moderator block, in order to slow down some of the neutrons and recover by backscatter some neutrons emitted in the opposite direction. This increases the probability of neutron interaction with chemicals inside the munition. *See "Radiation Safety" in Chapter 1 for important information about handling the ^{252}Cf source.*

The **gamma-ray detector** is a high-purity germanium (HPGe) detector that monitors the energies and intensities of gamma rays released by neutron interactions. A "shadow shield" of tungsten and boron carbide must be placed correctly to shield the detector from interference by the source radiation field. Failure to position the shadow shield components and the detector correctly may cause overall readings to be less sensitive.

The detector requires constant low temperatures to operate effectively, and is mounted to a portable dewar filled with liquid nitrogen. When not in use, the detector should be attached to a 30-liter "mother" dewar that continuously refills it with liquid nitrogen. *See "Cryogenic Safety" in Chapter 1.*

The **multichannel analyzer**, or MCA, supplies power to and receives electrical pulses from the detector. The voltage of each pulse is proportional to the gamma-ray energy. These pulses are amplified and sorted according to voltage into 8,191 bins or "channels." In sorting, the information is converted from continuous (analog) data to specific (digital) values which appear on the PC screen as an energy spectrum.

A notebook personal computer provides a versatile control panel for the MCA, and is also used to record and analyze the information. The MCA software operates in a Microsoft Windows environment.

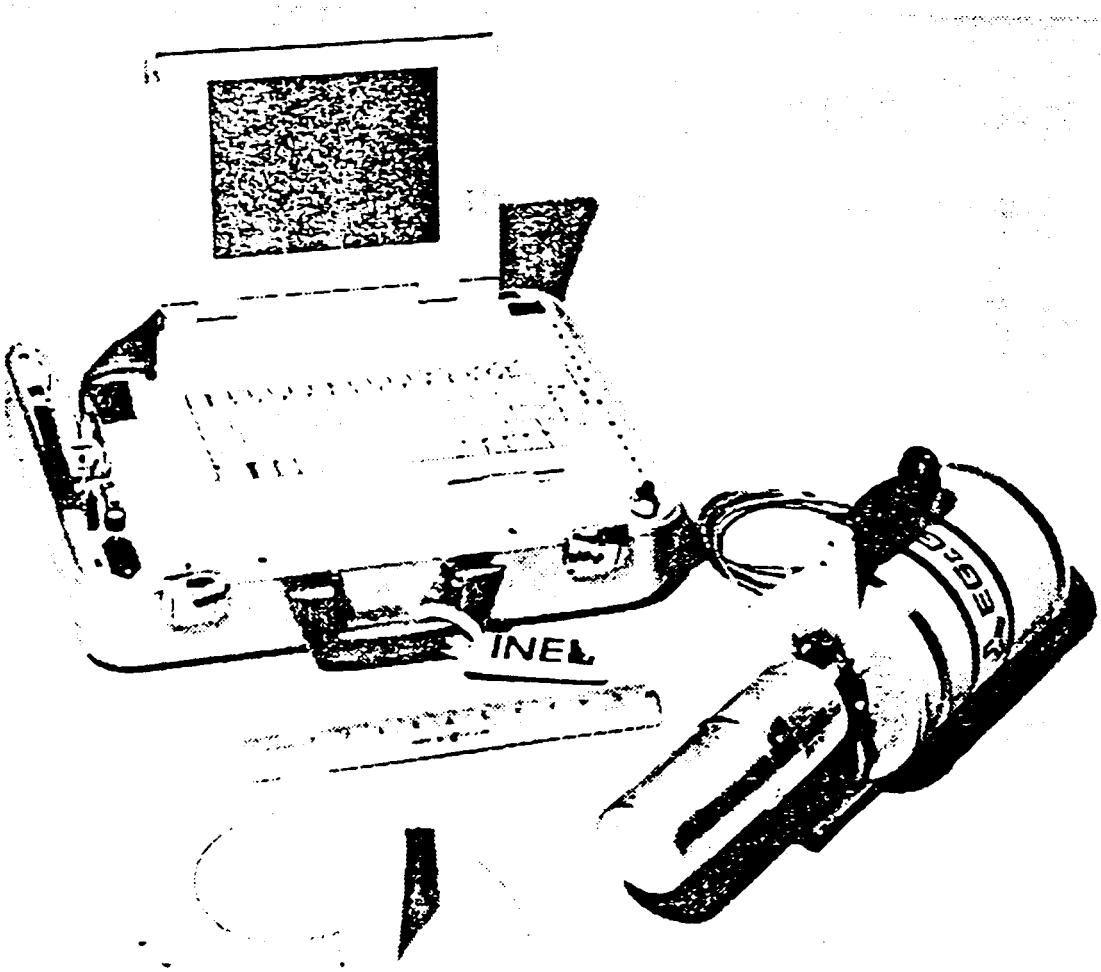

Simplified PINS Operation

Electronics Set-up

1. Set up the MCA and computer in the safe zone (15 to 80 feet from the assay site). Connect the ribbon cable and the blue/black twisted wire from the computer to the MCA.
2. Attach cables to the MCA, then to the detector.
3. Set the potentiometer on the MCA to 0. To use AC power: connect the MCA power cord and plug into power strip; connect computer power converter to port at the back and plug into power strip. Plug power strip into grounded outlet.
4. First turn on MCA power; then turn on the computer by sliding the switch above the keyboard to right and releasing. A green LED should illuminate.
5. Double-click Maestro icon. Under ACQUIRE menu, choose 92x CONTROL. Verify settings for AMPLIFIER GAIN, FINE GAIN, and SHAPING TIME. HIGH VOLTAGE should be at 0. Click ON in the HIGH VOLTAGE box, then slowly turn potentiometer until HIGH VOLTAGE reaches the appropriate setting for your system. Click ESCAPE.

Shadow Shield Configuration

1. In the safe zone, assemble the detector stand so that the center of the detector will line up with the widest part of the item to be assayed. If an item is only partially full, line up the detector on the estimated fill center of mass.
2. In the assay zone, position the shadow shield, tungsten blocks, boron carbide plate, and bismuth collimator on the detector stand as shown in figure 2C on page 9 of this manual.

Detector and Source

1. Loosely tape a plastic bag around the detector if it is likely to be exposed to dirt, rain, or snow. Connect the cable set to the detector, insuring that the strain relief clip is connected to the ring on the detector handle. Carry the detector to the stand and slide it into place. Secure the cable set to avoid tripping hazards and to keep it out of the path of fork lift trucks.
2. In the assay zone, position the shadow shield, tungsten blocks, boron carbide plate, and collimator on the detector stand as shown in figure 2C on page 9.
3. Install californium-252 source.

Pole Zero, Shaping Time, and Gain Adjustment

1. Select 92X CONTROL from the ACQUIRE pull-down menu.
   a. Check that the SHORT shaping time is selected.
   b. Check that the coarse gain radio button labeled x10 is selected.
   c. Set the overall gain to about 6.4.
   d. Click TRIGGER in the POLE ZERO box. Observe that the notation *POLE ZERO COMPLETE* appears at the bottom of the screen.
2. Slide the detector out of the collimator and point it at the white polyethylene moderator block.
   a. Click START. Observe that the hydrogen peak at 2223 keV grows in at channel 1600 ± 10 channels. Tweak the fine gain if necessary.
   b. Re-pole zero if the gain was adjusted.
   c. Click STOP. Click ESCAPE.
   d. Return the detector to the bismuth collimator.

Collecting data

1. Select PRESETS from the ACQUIRE pull-down menu. Enter the desired LIVE TIME and click OK.

   Choose CLEAR from the ACQUIRE menu.

   Choose START from the ACQUIRE menu.
2. Monitor the screen during the assay so that you may intervene if an unusual event occurs.

Saving data

1. The assay stops when the live time equals the time entered in the preset menu. After this occurs, transfer the new data to the Buffer by choosing COPY MCB>BUFFER in the ACQUIRE menu.
2. To save the data in the Buffer to the PC's permanent disk drive, choose SAVE under the FILE menu.
3. Delete the asterisk in the dialog box and enter the new file name. Include the PINS system used, the date, and the sequence of the assay. Click OK, then enter a description of the assay. Click OK.

Analyzing data

1. After exiting the Maestro program, double-click the ANALYSIS icon on the desktop. Select the file you wish to analyze in the filename window. Select AUTO ANALYSIS from the ANALYZE menu. The analysis will proceed with a status screen showing the progress of the analysis.

Keyboard shortcuts

The following keystrokes may be used to replace mouse functions in the Maestro application.

Acquisition

Alt 1	Start data acquisition
Alt 2	Stop data acquisition
Alt 3	Clear data and collection times
Alt 4	Switch between full and expanded display (can also use F3)
Alt 5	Transfer data to the buffer
Alt 6	Switch between MCB display and buffer display

Miscellaneous

Esc	Cancel/Return to previous display
Alt x	Access menu (x is the underlined character in the menu name)
↑	Increase vertical scale
↓	Decrease vertical scale

Cursor Positioning

→	Move channel pointer 1 channel to right
←	Move channel pointer 1 channel to left
Pg Up	Move channel pointer 128 channels to right
Pg Dn	Move channel pointer 128 channels to left
Home	Move channel pointer to channel 0
End	Move channel pointer to channel 8191
Ctrl →	Jump to next higher peak centroid
Ctrl ←	Jump to next lower peak centroid
Alt →	Jump to next higher library energy
Alt ←	Jump to next lower library energy

Gamma-ray energies

Energy (keV)	Element	Reaction	Other lines	Remarks
279.5	arsenic	(n, n'γ)	264.7	L-agent
983.5	titanium	(n, n'γ)	1381.5	FM smoke
1266.1	phosphorus	(n, n'γ)	2233.4, 3900.3	WP, G & V agents
1950.9	chlorine	(n, γ)	1959.1, 6110.9	decon bleach, FM, FS, HC smoke, H & L agents
2211.8	aluminum	(n, n'γ)	1014.4, 7723.9	M55 rocket casing
2223.25	hydrogen	(n, γ)		energy calibration line
2230.2	sulfur	(n, n'γ)	5420.5	FS smoke, H & V agents
2233.4	phosphorus	(n, n'γ)	1266.1, 3900.3	WP, G & V agents
3900.3	phosphorus	(n, γ)	1266.1, 2233.4	G & V agents
5420.5	sulfur	(n, γ)	2230.2, 4909.5	FS smoke, H & V agents
6110.9	chlorine	(n, γ)	1950.9, 1959.1	decon bleach, FM, FS, HC smoke, H & L agents
7631.13	iron	(n, γ)	1238.3, 7645.45	steel munition casings
7645.45	iron	(n, γ)	1238.3, 7631.13	energy calibration line
10318.3	nitrogen	(n, γ)	5269.2, 10829.2	explosives, V agent

Chapter 1: Safety

The PINS system provides a significant safety advantage over more intrusive assay methods, since it eliminates drilling and direct contact with chemical agents. Certain hazards do exist, however; radiation, liquid nitrogen, and electricity can be harmful or lethal if handled carelessly. Thoroughly read the safety precautions in this chapter and comply with them in addition to your specific safety orders and operating procedures.

A. Cryogenic Safety

Liquid nitrogen is essential to the operation of the detector. Potential hazards involve pressurized cryogenic gas and skin contact with cryogenic materials.

1. Hazards

- Because of liquid nitrogen's large expansion ratio from liquid to gas (692 to 1) high pressures due to evaporation can occur if venting or pressure relief provisions are inadequate.
- Some materials become brittle and fracture when exposed to liquid nitrogen temperatures (77K).
- In contact with human skin, liquid nitrogen causes burns similar to burns from high temperature contact. Eyes are especially vulnerable to this type of exposure.
- Although nitrogen gas is nontoxic, it does displace oxygen and may cause asphyxiation if the nitrogen concentration in the air increases by more than one percent.

2. Precautions

- Wear goggles or a face shield and gloves when filling the mother dewar or detaching the detector. Gloves must be impervious to liquids and large enough to be tossed off in case of a spill. Avoid wearing anything capable of trapping or holding spilled liquid nitrogen close to the skin. An impervious apron or coat, cuffless trousers and high-topped shoes are recommended. Remove all watches and jewelry.
- The detector should be attached and detached by two-person teams.
- Always grasp the end of the hose near the dewar neck while opening the valve from the fill tank. Open the valve slowly to prevent losing control of the hose.
- To discourage ice blockage at the valve seat of the mother dewar, always use clean liquid nitrogen and keep the dewar neck plug in place except when filling. Whenever the detector or the mother dewar has been warmed up, purge it with dry, room temperature nitrogen gas for 10 to 30 minutes before filling with liquid nitrogen. This will remove residual moisture from the dewar.

  If an ice blockage does occur, empty all liquid nitrogen from the mother dewar and allow it to warm. Then blow dry nitrogen gas through the fill spout with the valve fully open for 20-30 minutes.
- Piping or transfer lines should be constructed to avoid trapping liquid nitrogen in the line. Evaporation can cause pressure buildup and explosion. If it is impossible to empty all lines, install safety relief valves and rupture disks.
- Vent the mother dewar to a large, well-ventilated area or to the outside to avoid buildup of inert gas in the work or storage room.
- In the unlikely event that the detector's vacuum insulation fails, its 1.2 liters of liquid nitrogen could expand to 800 liters of gaseous nitrogen, displacing enough oxygen in a small room to cause asphyxiation. To prevent such an occurrence, use the detector in a well-ventilated space no smaller than 40,000 liters or 1400 cubic feet. The volume of a one-car garage, 12 feet wide by 20 feet long by 10 feet high, is 2400 cubic feet or 68,000 liters.

B. Electrical Safety

1. Hazards

Improper use of the PINS electronics assembly could cause equipment damage, loss of data, or electrical shock to the operator.

2. Precautions

- Properly connect all cables prior to turning on the power.
- Turn the power off before disconnecting cables.
- Reduce strain on the cable connectors as much as possible by using the strain relief clip and by holding the cable bundle when carrying the detector.
- Before each assay, check the settings in the acquire menu. Be sure the voltage is at the proper setting for your equipment. Too much voltage will damage the detector, and too little may decrease efficiency, energy resolution and accuracy.
- Don't use any component of the PINS system in or near water.
- The AC cable is fitted with a three-wire grounding plug and will only work in a grounded outlet. Do not alter the plug or attempt to adapt it to an ungrounded outlet.
- Plug the MCA and PC power cords into the same outlet to avoid ground loops.
- Do not remove the mounting plate on the MCA as serious electrical shock could occur. If difficulties cannot be remedied using the information in this manual, call the technical support number listed in the reference section or return the MCA to the manufacturer.
- Always set the detector bias manually, using the potentiometer, until the correct setting appears in the text box. In the unlikely event that the computer errors and attempts to alter the voltage, it cannot override the manual setting.

C. Radiation Safety

1. Hazards

The PINS ^{252}Cf source emits neutrons, beta rays and gamma rays. To minimize your health risk from ionizing radiation, keep your dose as low as reasonably achievable by observing the following guidelines for handling the PINS radioactive source.

2. Precautions

- To prevent leakage of radioactive material from the neutron source, the ^{252}Cf is alloyed with platinum wire and welded in a stainless steel capsule, which, in turn, is welded inside an outer stainless steel capsule. The source is manufactured under rigorous quality control measures and is certified as "special form" by the U.S. Department of Transportation. The source is also periodically checked for leaks to stringent limits at the INEL.
- When not in use, store the source in its Department of Transportation-approved shipping container. The container is lined with neutron-absorbing materials.
- At the end of the day, after return from the field, the source should be stored in its approved shipping container in a locked room or cabinet 15 feet away from common human activity.
- Minimize your time near the source, maximize your distance from the source.
- When setting up, adjusting, or changing munitions, first remove the source and moderator block fifteen feet away from the detector stand. Then make changes and adjustments. Finally, reposition the source/moderator on the detector.
- Move the source directly between the approved container and the moderator. Do not place the source in any other container or set it out in the open.
- Use the wire or string to handle the source. Do not touch the stainless steel capsule or allow it to come in contact with other objects.

- When in use, the principle personnel protection from the beta, gamma, and neutron radiation field is the 15-foot exclusion area around the source. Outside the 15-foot radius, radiation fields fall to levels too low to measure with standard health physics instruments.

- Always set up the MCA/electronics assembly outside the 15-foot radius, preferably outside the igloo or munitions storage area. (An 80-foot cable set is provided specifically for this purpose.)

- Survey the area surrounding the source and define an exclusion zone with yellow and magenta rope to discourage entry by unauthorized personnel. Post the provided radiation signs.

of a fork lift truck; the weight of the fork lift can crush the cable and ruin it for further use.

- Avoid splashing the equipment, cable, or clothing that you care about with decon solution.

- Avoid touching the munitions, either with your body or the PINS equipment. Let the ammunition specialists handle the shells.

- Review your site-specific training for chemical leak testing, evacuation, and personal protection. The PINS system is designed to work within existing safety standards; review those standards frequently and comply with them at all times.

D. General Safety Concerns

General safety guidelines should be observed when handling any type of equipment. Although many of these guidelines are considered common sense, be aware of the hazards and take the necessary steps to prevent injury or equipment damage.

1. Hazards

- Although the PINS system is designed for portability, the weight or size of the equipment may present difficulties in some cases. Possible hazards include mashed or bruised fingers, back and neck strain, and equipment damage.

- Cables present a tripping hazard in traffic areas.

2. Precautions

- Lift heavy objects with the legs, not the back, and wear a back support device if necessary. Rather than risking muscle strain, make several trips or enlist help when transporting the equipment rather than attempting to carry it all at once.

- Route the cable to avoid creating a tripping hazard. Also avoid stringing cable in the path

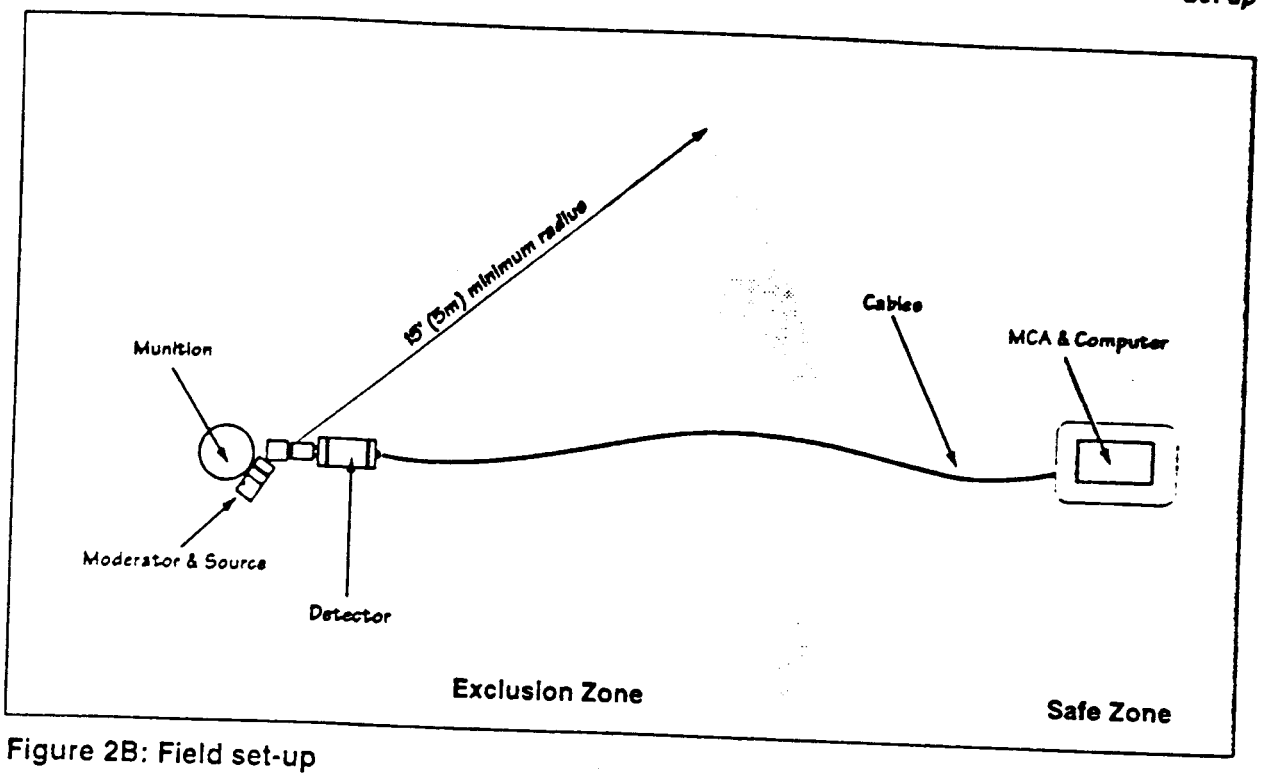

Figure 2B: Field set-up

B. Electronics set-up

Upon arriving at the assay site, it is advisable to establish two areas: an "exclusion zone" inside the munition storage area or igloo, and a "safe zone" 15 to 80 feet away.

1. MCA and computer set-up

The MCA requires some advance warm-up to perform optimally, and can be running as you make other preparations.

In the safe zone, remove the MCA from its box and place it in a dry area off the ground. Open the lid and place the computer in the center of the MCA. Connect the ribbon cable and the blue/black twisted wire from the computer to the MCA.

2. MCA and detector cabling

A set of four cables, each one clearly labeled, connects the MCA to the detector. Each cable connector fits exclusively to its counterpart, so it is impossible to attach them incorrectly. Attach the cables to the MCA first, then to the detector.

Be sure to connect the strain-relief clips at each end of the cable to the D-shaped handle on the MCA and the ring on the detector handle. It is important to avoid placing a direct pull on the cable's electrical connectors.

3. Voltage and power source

Before introducing a power source, first set the potentiometer knob at the lower right of the MCA to 0. Failure to do so could result in a surge of high voltage, damaging both the MCA and the detector.

Using AC power: Connect the MCA power cord and plug it into the power strip provided. Connect the computer's power box to the port at the back of the computer and plug it into the power strip as well. Plug the power strip into a grounded outlet.

Using the MCA battery: To charge the battery, plug the MCA into an AC power source for overnight, with the switch in the "charge" position. To operate the MCA from battery power, slide the power switch to the "on" position. Note that the MCA automatically switches to battery power in case of AC power failure.

Using the computer battery: The computer battery charges automatically when plugged into an AC receptacle. A fully discharged battery takes two hours to charge. The computer also switches automatically to battery power when AC power is interrupted.

4. Turning the equipment on

Always turn on the MCA first. Then open the computer lid and turn it on by sliding the switch above the keyboard. It takes 30 - 40 seconds for the computer to boot and the Windows desktop to appear.

5. High voltage

High voltage is essential for the operation of the PINS system and is determined by the design of the detector. Check the label on the nose of your detector to determine the proper voltage setting for the MCA. This information is also displayed on the reference sheet inside the MCA case.

To initiate the high voltage, follow these steps:

a. Initiate the Maestro program by double-clicking on its icon with the pointer.

b. Click the ACQUIRE menu and choose 92X CONTROL

c. Verify that SHAPING TIME is short and that the HIGH VOLTAGE is set at 0.

d. Click ON in the HIGH VOLTAGE box.

e. Slowly turn the potentiometer knob to the appropriate setting for your system; the value shown on the computer screen will change as you turn the potentiometer.

f. Once all settings are correct, click ESCAPE and lock the high voltage potentiometer.

Chapter 2: Set-up

The PINS system is designed for quick, convenient set-up and use. Read this chapter thoroughly and refer to it often as you become familiar with the equipment; then use the laminated reference page for future reminders.

A. Preliminary preparations

1. Equipment Inventory

Six specialized shipping boxes are required to contain the PINS equipment. Only four will be required at the actual assay site; the other two contain the mother dewar, its stand, and related equipment. To open the latches, first lift the metal tab then turn it counterclockwise. The latch will disengage and fall forward.

Verify the inventory as listed in the inset on this page.

2. Mother dewar stand assembly

The mother dewar is required to provide a constant source of liquid nitrogen for cooling the detector. It should be assembled in a dry, level, well-ventilated area (a laboratory or other permanent building) with a low-pressurized (30 psi) tank of liquid nitrogen available for filling and refilling. The mother dewar will not be required at the assay site.

To set up the mother dewar, place the metal tabletop on the floor with the threaded fittings facing up. Remove the legs from the box. Each one consists of two sections connected by an elastic cord (like a shock-corded tent pole). Fit the sections together, then screw the threaded end into the fitting on the tabletop. After attaching all four legs, turn the structure upright and check for stability. Place the stand within five feet of the pressurized liquid nitrogen tank.

Remove the mother dewar from its box. Guide the fill tube on the bottom of the dewar through the hole in the center of the the stand and fit the dewar's metal base into the metal plate on the stand. Rotate the dewar one quarter-turn clockwise to lock it in place. (See Figure 2A.)

3. Filling the mother dewar

Read the cautions in chapter 1, "Cryogenic Safety" before filling the mother dewar.

First, don the protective gear (face mask and gloves). Turn the valve ring at the neck of the dewar clockwise to plug the fill tube at the bottom. Remove the stopper and set aside.

Attach the metal hose to the pressurized tank at the valve labeled "liquid." Place the other end of the hose inside the dewar neck. Still grasping the hose with one hand, slowly open the valve on the pressurized tank. Continue to hold the hose as the mother dewar fills. Don't open the valve too far, as liquid nitrogen may splash out before the dewar fills. When liquid begins to spill out of the dewar, turn off the tank valve and remove the hose from the dewar. Replace the stopper.

Table 2A: Equipment Inventory

Box label	Contents
1. Mother dewar	Mother dewar (cylindrical tank)
2. Mother dewar stand	4 legs, tabletop, hose, protective gear
3. HPGe detector	HPGe detector only
4. MCA/accessories	MCA, computer, extension cord, power strip, tool box, detector cable, radiation signs and rope
5. Detector stand	Tabletop, three sets of legs, collimator, moderator, boron carbide plate
6. Shielding	Tungsten shadow shield blocks

4. Attaching the detector

An uncooled detector requires a minimum of four to six hours on the mother dewar before use, so you may wish to attach it the day before an assay is scheduled. If the detector has been used and is still cold when attached to the mother dewar, it requires only five to ten minutes for refill. In addition, leaving the detector on the mother dewar is a safe and convenient method of storage.

To attach the detector to the mother dewar, first unscrew and remove the protective sleeve from the fill spout under the mother dewar.

Remove the plug from the rear of the detector. Release slowly since the dewar normally operates at a positive pressure of 1 - 2 psig.

With the detector nose pointed downward, carefully lift it under the mother dewar so that the fill spout enters the opening. Raise the detector until the mother dewar's O-ring (under the brass locking ring) is engaged in the detector opening. The fill spout of the mother dewar must pass through an internal guide hole inside the detector dewar; so, if the detector will not seat, some lateral maneuvering of the detector may be required to allow complete fill tube insertion.

Screw the brass locking ring onto the threads of the detector until tight. It may be necessary to lubricate the threads before attaching the detector to the mother dewar.

Fully open the valve ring at the neck of the mother dewar (turn counterclockwise). This opens the fill tube at the base of the mother dewar, allowing liquid nitrogen to drain into the detector.

5. Detaching the detector

Since the detector is extremely fragile, it's best to work with a partner when detaching it from the mother dewar. Both people should wear protective gloves and full face masks.

Completely close the valve ring at the neck of the mother dewar (turn clockwise). Then, one person should support the detector as the other unscrews the brass locking ring under the mother dewar.

Lower the detector straight down until it is clear of the fill spout. Be careful not to exert force on the fill spout. Install the plug at the rear of the detector. Replace the protective sleeve on the fill spout under the mother dewar.

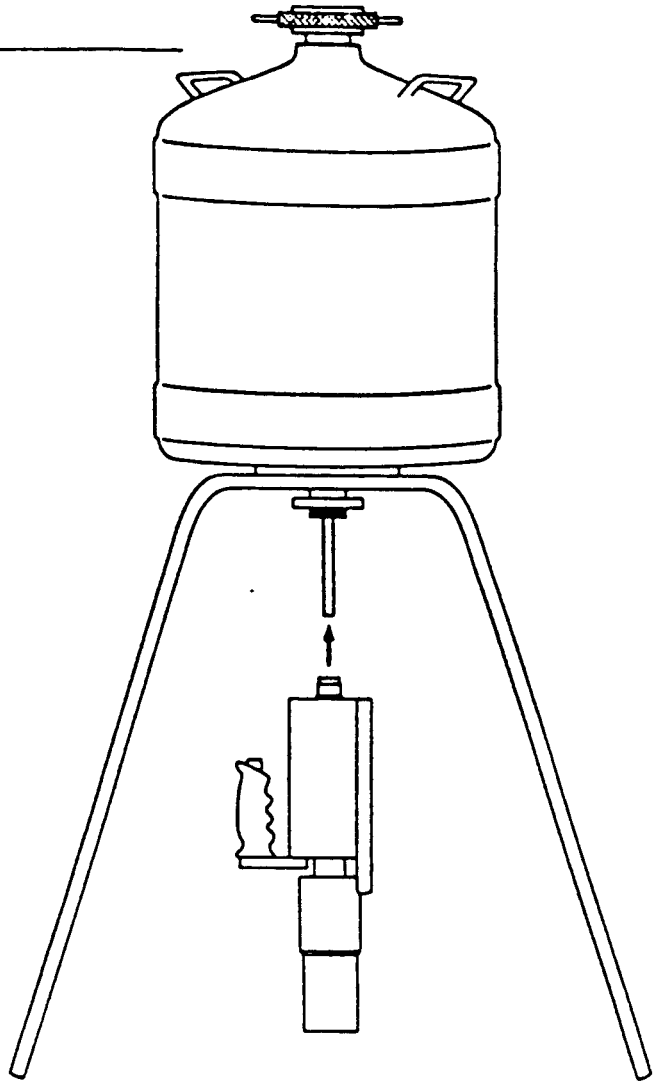

Figure 2A: Mother dewar and detector

6. Transporting the detector

The detector is both specialized and costly. When taking it from the mother dewar to the assay site, always carry it in the designated shipping box. Not only is this box sturdy and well-padded, it is also equipped with a valve to release pressure build-up from liquid nitrogen in the detector.

Plastic bags are provided with the PINS equipment for covering the detector in wet or humid environments. When using this protective measure, tape the bag opening loosely around the cables, allowing plenty of space for liquid nitrogen gas to escape and avoiding strain on the cable connectors.

C. Assay Configuration

1. Detector stand assembly

While still in the safe zone, assemble the detector stand. Legs are provided in a range of lengths so the height of the stand may be varied between 6 inches and 72 inches. Set up the stand so that the middle of the detector lines up with the estimated center of fill mass of the item under test. Often this coincides with the widest part of a munition.

2. Shadow shield positioning

Carry the assembled detector stand and shadow shield components (tungsten blocks, bismuth collimator, and boron carbide plate) into the assay zone. Arrange these items on the stand as shown in Figure 2C.

Place the detector stand in an open area. Avoid setting up near objects that may create interference with the data, such as plastics, other munitions or chemicals, or concrete walls.

3. Container/munition placement

If possible, stand an artillery shell vertically, and align its diameter with the black boron carbide plate, about 1/4 to 1/2 inch from the detector stand. Align the center of small containers to be assayed in the same manner.

For large containers and bombs, the alignment is not critical, however the fastest assay results will be obtained if you can line up the detector on the center of mass of the fill. With large items, the gamma-ray return is often so strong that the MCA dead time exceeds 60%, compromising the energy resolution. If this is the case, back the detector stand away from the item a few inches or so until the dead time falls below 55%.

A note of caution with DOT 500X ton containers. Often ton containers are stacked so that access is available only at their ends. Set up PINS at the end without valves.

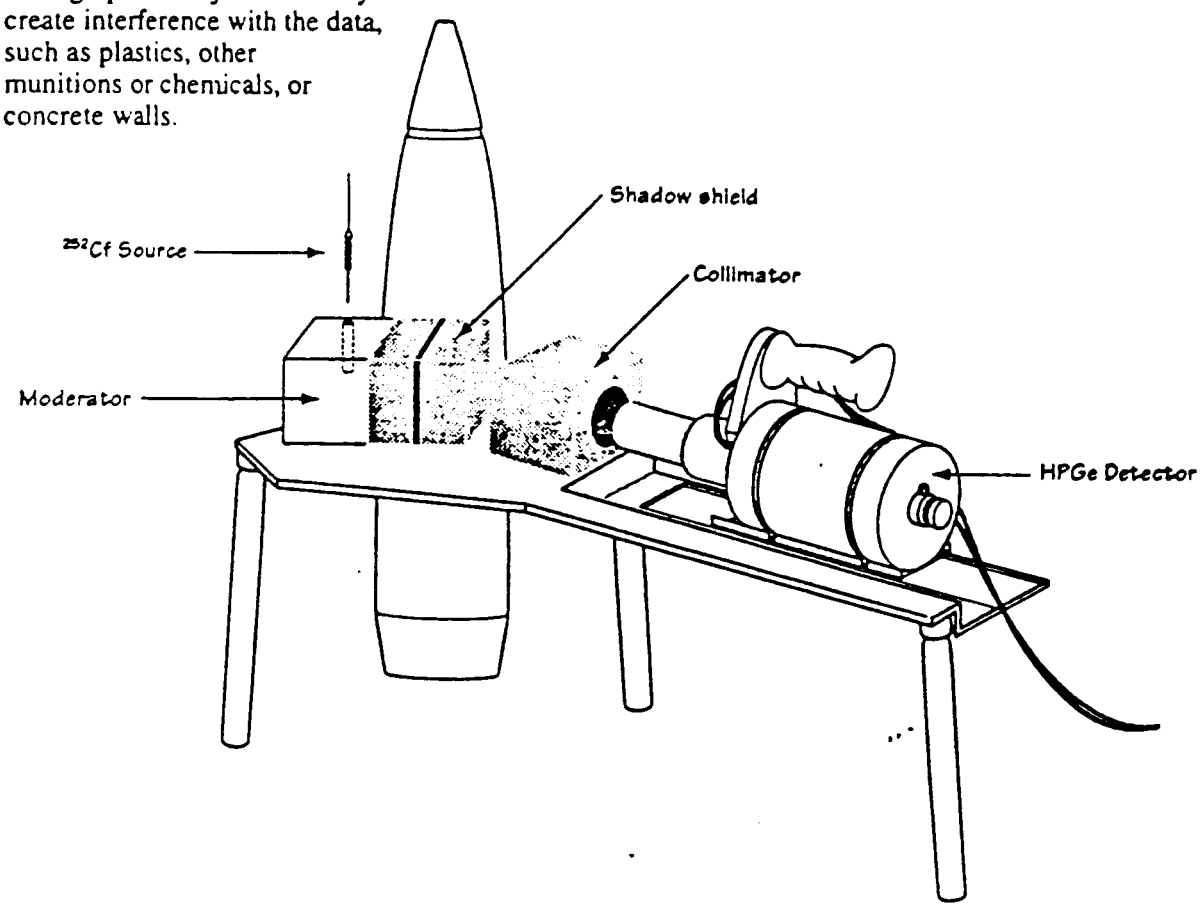

Figure 2C: Detector and shadow shield configuration

4. Overpacked munitions

If the munition to be assayed is inside an overpack, an x-ray image is most helpful in choosing the best assay position. Align the detector with the center of mass of the munition's fill. A small munition inside large overpack, e.g., a 4.2" mortar projectile inside a 55-gallon drum, poses a difficult assay problem with PINS, since the sensitivity drops rapidly as the detector-munition distance increases. If possible, such munitions should be removed from their overpack.

D. Detector & Source

Once the stand is assembled and positioned correctly with the item to be tested, exit the assay zone to get the final components: the detector and the source.

1. Detector placement

If working in an environment where the detector is likely to become damp or dirty, place it inside a clear plastic bag and tape the opening of the bag loosely around the cables at the rear of the detector. Leave enough space around the cables so that the liquid nitrogen boil-off vapor can escape.

Holding the cable bundle with one hand to prevent stress on the connectors, carry the detector into the assay zone and slide it into the bismuth collimator block. (Refer to Figure 2C for the proper configuration.)

Secure the cables by fastening them against a wall or taping them to the floor. Avoid placing them in a traffic area where they could present a tripping hazard or could be damaged by heavy equipment.

2. Source placement

The ^{252}Cf neutron source is placed last to minimize operator exposure to radiation. When handling the source, always keep it away from your body by dangling it on the attached wire, or carry it in the moderator block. Avoid touching the source capsule.

Remove the source from its approved transportation container and lower it into the moderator block. If you are wearing protective gear (respirator, coveralls, and gloves) you may require assistance in completing this step.

Always extend the hand holding the source away from the body, whether the source is dangling from the attached wire or seated in the moderator block.

Carry the moderator block, with hand extended and the source facing away from you, into the assay zone and place it in the shadow shield base with the source facing the container to be assayed.

3. Radiation survey

Once the source has been placed, survey the area for radiation. At the distance from the source where your survey device registers less than 0.1 millirem per hour, restrict entry with the yellow and black or magenta rope and hang the "radiation area" signs. Normally, the exclusion radius is 10 to 15 feet (3 to 5 meters) from the source.

Chapter 3: Assaying a Sample

Once the equipment has been set up, the operator's tasks consist mainly of monitoring the computer, recording data, and moving new samples into position to be assayed. This chapter also explains how to shut down and disassemble the equipment.

A. Collecting data

1. Pole zero

This step is necessary only before the first assay and should be performed with the source and munition in position, if possible.

First, select 92X CONTROL from the ACQUIRE pull-down menu.

Click TRIGGER in the the POLE ZERO box.The "PZ" LED on the MCA should light briefly. A message at the bottom left of the screen will indicate when complete.

Click ESCAPE to exit the 92X CONTROL menu.

2. Gain adjustment

Slide the detector out of the collimator and point it at the white polyethylene moderator block.

a. Click START. Observe that the hydrogen peak at 2223 keV grows in at channel 1600 ± 10 channels. Tweak the fine gain if necessary.

b. Re-pole zero if the gain was adjusted.

c. Click STOP. Click ESCAPE.

d. Return the detector to its normal position on the stand.

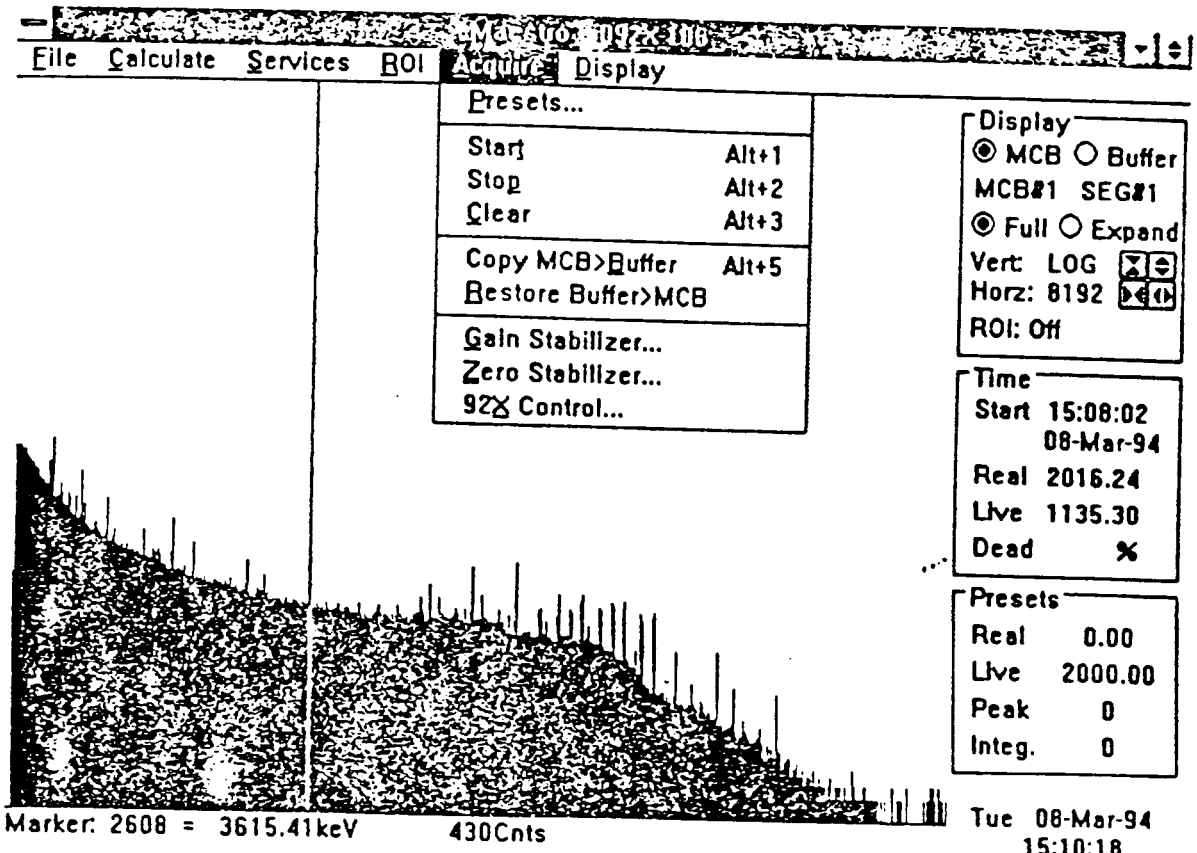

Figure 3A: Acquire menu

Table 3A: Recommended Assay Lengths

Agent to be verified	Container	Element(s) to be observed	Confidence level* expected	Recommended Live Time
H (mustard)	Ton container	H	1	
		Cl	1	500 seconds
H (mustard)	155mm or 105mm projectile or 4.2" mortar	H	1	
		Cl	1	
		S	.25 or .5	1000 seconds
VX	155mm projectile	H	1	
		S	.5 or .75	1000 seconds
		P	.25 or .5	
		N	.25	
VX	8" projectile	H	1	
		S	.75	1000 seconds
		P	.5	
		N	.25	
VX	spray tank	H	1	
		S	.75	1000 seconds
		P	.5	
		N	.25	
VX	M55 rocket	H	1	
		S	.75	1000 seconds
		P	.25 or .5	
		N	—	
GB	105mm projectile	H	1	
		P	.5	2000 seconds
GB	155mm projectile, M55 rocket	H	1	
		P	.5	1000 seconds
GB	ton container or large bomb	H	1	
		P	.25 or .5	1000 seconds**
WP	155mm projectile or 4.2" mortar	P	1	500 seconds
HE	155mm projectile	H	1	
		N	.75 or 1	2000 seconds
L	ton container	H	1	500 seconds
		Cl	1	
		As	1	
Unknown	155mm or 8" projectile			1000 to 2000 seconds
Unknown	MC-1 bomb or ton container	Count at least 1000 seconds or until two or more elements (in addition to H) are observed with a confidence level of .5 or more. If only N_2 or P are observed, the fill is high explosive or white phosphorus, respectively.		

* *If confidence levels shown here are not equalled in the Analysis program results, extend the count for an additional live time without disturbing the equipment set-up.*

** *Length of count determined by anticipated concentration (purity) of agent and agent type.*

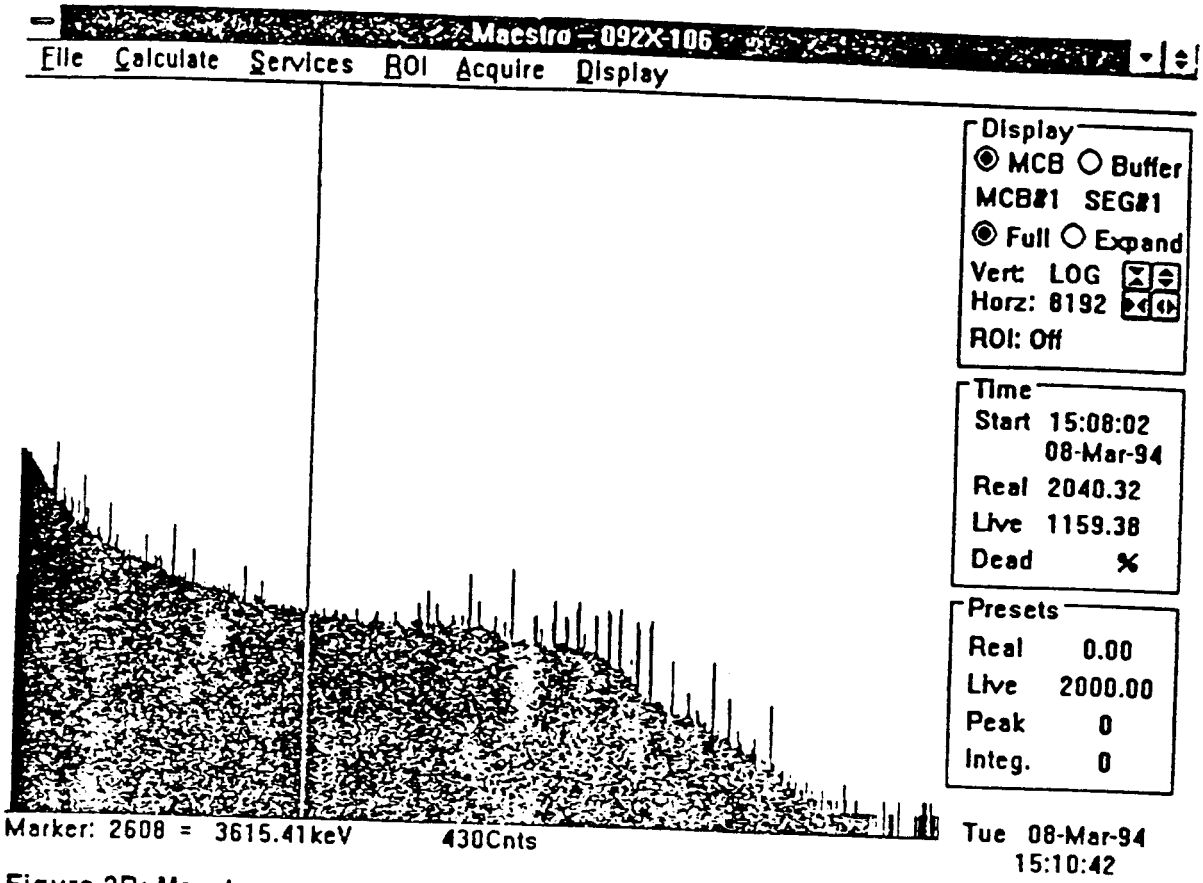

Figure 3B: Maestro screen with assay in progress

3. Setting assay length

Under the ACQUIRE pull-down menu, select PRESETS. Delete the existing live time and enter the time appropriate to the size of the sample under assay. (Refer to Table 2D.) Click OK.

Return to the ACQUIRE menu. Choose CLEAR.

Return to the ACQUIRE menu. Choose START.

4. Starting an assay

Return to the ACQUIRE menu. Choose CLEAR. Choose START.

5. During the assay

Data peaks will accumulate on the screen, beginning in the lower left corner. In the box at the right side of the screen, three time readings are displayed: Real Time, the seconds elapsed since the assay began; Live Time, the seconds during which the MCA has actually collected data; and Dead Time, the percentage of Real Time during which data has not been collected.

Monitor the computer screen as the assay progresses. The screen may fade to black during the assay; this is a function of the built-in screen saver, which activates after 5 minutes of keyboard inactivity. To disrupt the screen saver and view the assay in progress, simply press the shift key.

If you observe any of the following, please consult the troubleshooting section of this manual immediately:

- Dead time is greater than 60 per cent, indicating that the munition or container is too close to the detector.
- ACQUIRE menu is grayed out and cannot be selected.
- Dead time is less than 10 per cent, suggesting

that the detector high voltage has tripped.

- A distinct valley is no longer visible between the 7631 and 7645 keV iron doublet peaks, indicating a gain shift and loss of energy resolution.
- An error message at the bottom of the computer screen.

B. Saving data

When the Live Time equals the time entered in the PRESET menu, the assay automatically stops. Once the assay is complete, the screen no longer shows a Dead Time reading.

Notice in the"Display" box at the top right of the screen that there are two options: MCB and Buffer. The MCB is the screen showing data as it is gathered; the Buffer is a temporary storage area for data. Data can be saved ONLY from the Buffer mode, not from the MCB. It is essential that current data from the MCB be transferred to the Buffer before it is saved.

Transfer current data to the Buffer by choosing COPY MCB>BUFFER in the ACQUIRE menu. If there is unsaved data in the Buffer, a dialog box will ask if you wish to save it. If this data is not needed, click NO. The old data will be deleted as the new data is placed in the Buffer.

To save the data in the Buffer to the PC's memory, choose SAVE under the FILE menu. A dialog box will appear, with an area to enter the name of the new data file.

Delete the asterisk, then enter the new file name in the following manner: PINS system number, month and day, two-digit sequence of the assay, and file extension .CHN.

In the example below, p2 refers to PINS system 2, 0701 is July 1, and 04 indicates that the assay is the fourth one completed on that day. The extension (.CHN) indicates the type of file and must be present for later analysis.

p2070104.CHN

Click OK. A new dialog box will appear with space to enter a description of the data. Type any information that may be helpful in the future to distinguish this assay from others. Click OK.

To analyze the data, quit the Maestro program by choosing EXIT in the FILE menu, then follow the steps below.

C. Analyzing data

Use the Analysis program to automatically energy calibrate the PINS system, find energy peaks, and identify elements and chemical agents.

To begin, double-click the Analysis icon on the desktop.

When the application opens, the pointer appears in a textbox titled DIRECTORY. Enter the storage directory for your spectra either by typing the directory name or by clicking on the arrow beside the directory and choosing from the displayed list. When a directory is chosen, its stored spectra are listed below the filename box. Select the spectrum to be analyzed by clicking on the spectral filename. The spectrum description will be presented in the RESULTS window. Click on ANALYSIS and choose AUTO ANALYSIS from the displayed menu.

A status screen will then be displayed showing the progress of the analysis. When the analysis is complete, the result will be displayed in a separate window. If the analysis could not be performed, instructions on what to do will be displayed in the results window.

The PINS assay depends on the detection of key chemical elements within a munition or container. Key elements detected during an assay are displayed on the left side of the results window, in bar-chart format. The length of each bar, on an arbitrary scale of 0 to 1, indicates the detection confidence for each element. Confidence levels of 0.25 or less indicate that an element might be present in the item under test, and confidence levels above 0.75 indicate that has been clearly detected. The results window displays the

analysis program's decision in plain language at the right hand side.

The confidence levels for each element are based on peak areas, peak area uncertainties, and the number of peaks detected.

If additional spectra are to be analyzed, repeat this procedure. When finished analyzing data, click EXIT in the menu bar.

D. Continuing an assay

If the confident level of an analysis is inadequate (consult Table 2D for recommended confidence levels), it is possible to add further information to any existing assay rather than starting over. This is possible only if the equipment has not been moved and less than 30 minutes has elapsed since the original assay was performed.

First, double-click on the Maestro icon. Go to the FILE menu and choose OPEN.

In the dialog box, type the name of the file to which you will add data. Then click OK.

The data will appear on the screen with the total times displayed at the right. Choose BUFFER>MCB under the ACQUIRE menu to move the spectrum from the computer's Buffer into the MCB mode.

Under Live Time in the PRESETS menu, add to the preset live time the additional time you wish to continue the assay. The total will be the cumulative reading for the data already gathered, plus the additional data you will collect. Click OKAY.

Choose START under the ACQUIRE menu. DO NOT choose CLEAR first.

The Live Time reading on the screen will continue from the original Live Time setting.

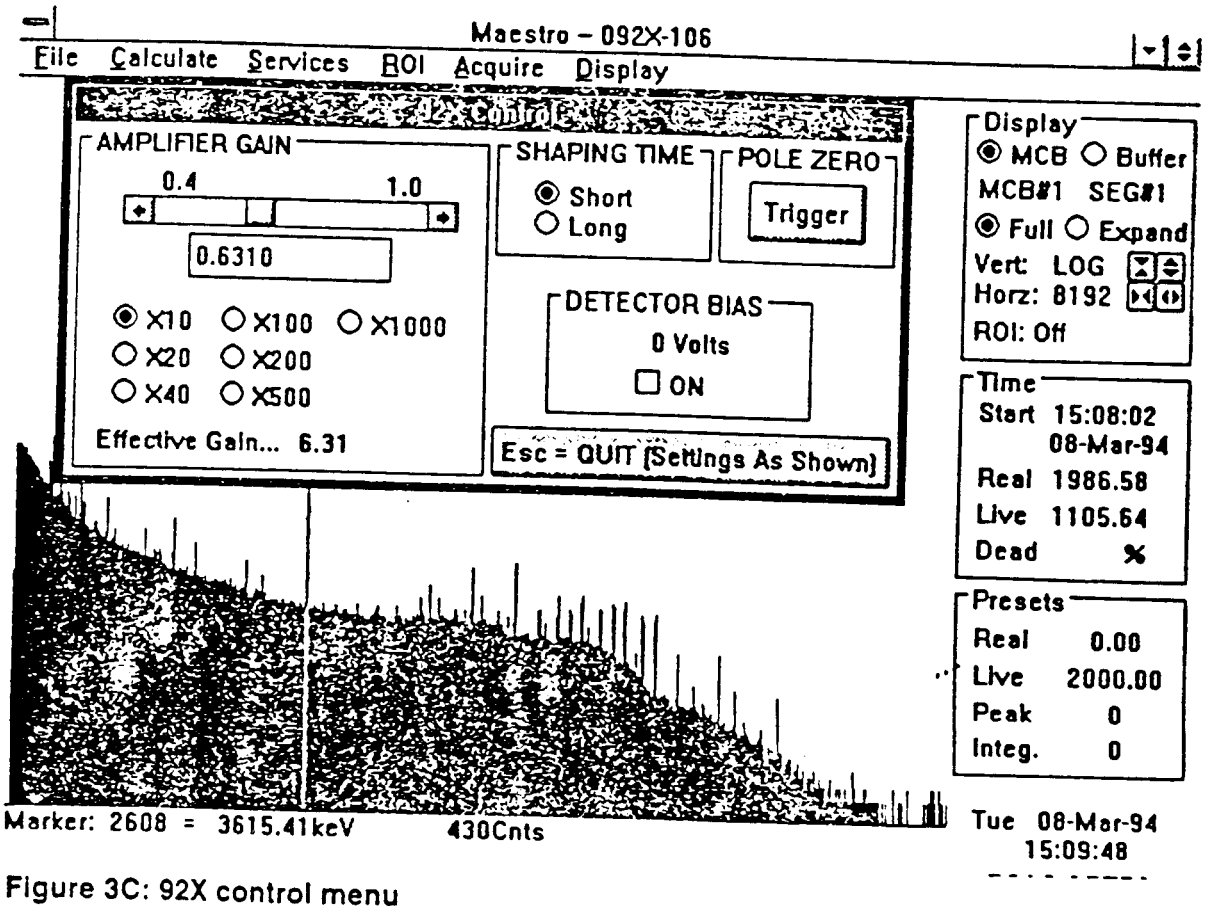

Figure 3C: 92X control menu

When the assay is finished, follow earlier procedures for saving the data by transferring it to the Buffer first. Save it by the same file name. A dialog box will ask if you wish to replace the existing file by the same name. Click YES.

Analyze the data again by following the above procedure.

E. Recording data manually

Data should always be recorded manually as well as electronically. Use a permanent logbook to record filename, container size and type, any known fill material, live time and dead time, the type and size of the neutron source, and the number of the PINS system. Also record the results of the analysis, and include drawings or notes about the configuration and any non-routine setting or event.

A suggested logbook page format is included at the back of this manual. If you find it convenient, you may photocopy it for your own use.

F. Beginning the next assay

If the data obtained from your first assay is sufficient, move the next sample into place.

First, enter the assay zone and remove the moderator block with the source inside it from the detector stand. Place the block at least 15 feet from the assay area while you are working there.

Position the next container or munition to be assayed. If it is the same type and size of container as the previous one, you may be able to position it in a pallet placed there earlier (see Chapter 2, Section C2). If this is not the case, use the guidelines of section 2.C.3 to ensure the container is positioned correctly.

Replace the moderator block with the source inside so that the source is facing the container as before. Repeat the steps as before for starting a new assay.

G. Shutting down PINS

First, shut off the high voltage. In the Maestro application, choose 92X CONTROL from the ACQUIRE menu. Manually reduce the high voltage by slowly turning down the potentiometer on the MCA. When the HV reading on the screen is at zero, click the X in the high voltage box to turn it off, then click ESCAPE. Check that the red HIGH VOLTAGE ON LED is no longer lit on the MCA top plate.

Exit Maestro and return to the desktop. When the Windows Desktop screen appears, turn off the power switch on the PC, then on the MCA. Turn off the power switch on the PC, then on the MCA.

Detach the cables from the PC and close and latch the PC notebook. Detach cables from the MCA; close and latch the cover. NEVER DETACH THE CABLES FROM THE MCA WITHOUT VERIFYING THAT THE HIGH VOLTAGE IS TURNED OFF. Place both items in their designated carrying cases.

Inside the assay zone, first remove the moderator block and neutron source from the detector stand and place the source in its approved shipping container. Store the source according to your specific safety and security regulations.

The yellow and black or magenta rope and radiation signs may be removed and stored in the "Miscellaneous" container.

Detach the cables from the detector and place it in its designated carrying case until it can be re-attached to the mother dewar.

Loosely coil the cable set, remove the shadow shield components, and disassemble the detector stand. Place all items in their designated carrying cases.

Chapter 4: Computer Operations

The computer is an invaluable tool both for monitoring assays and for determining the accuracy of the data being collected by PINS. Thorough knowledge of the operating techniques will increase both your efficiency and effectiveness as a PINS operator.

A. General PC usage

If you have never worked in the Microsoft Windows environment, read the following guidelines and practice with the mouse before using the PINS system.

The *mouse* is used for directing the pointer, a propeller or arrow symbol that appears on your screen. When within the spectrum display, the pointer assumes the form of a three-bladed propeller, the EG&G corporate logo. Within Maestro, the propeller will change to an arrow when placed in a dialog box, allowing you to perform various operations by clicking the mouse button.

The pointer can be moved in any direction by rolling the ball mounted on the right side of the computer display. The primary mouse button is located behind the ball on the outside of the computer. For ease of use, most operaters prefer to place the thumb on the ball and the index finger on the button.

On the opening screen or DESKTOP, notice the headings in the *menu bar* at the top of the screen. Move the pointer over a heading and click the mouse to access *pull-down menus*. To select one of the categories listed in a pull-down menu, move the pointer over the word and click.

Clicking some categories will open a *dialogue box*. Each dialogue box offers the capability to change certain settings either by typing them in a *text box* or clicking labeled boxes.

To enter text in a text box, place the pointer in the box and click. Use the delete or backspace key to erase the existing text; replace it by typing your own text.

To select a labeled box, place the pointer over the box you wish to activate and click the mouse.

To open an application, place the mouse over the application icon (the symbol that appears on the DESKTOP) and click twice in rapid succession (double-click).

B. PC shortcuts

The Windows operating system provides different avenues for completing the same task. For example, most of the mouse functions can be completed more quickly by using keyboard commands.

See Table 4A for a list of common keyboard commands. Most keyboard commands are also shown to the right of each corresponding function in the pull-down menus on your screen.

To access a listing in a menu bar without using the mouse, press the ALT key and the underlined letter of the menu bar item. You may select from the resulting menu by a) using the up and down arrows and pressing RETURN when the entry desired is highlighted; or b) pressing the underlined letter of the option (without pressing ALT).

Within dialog boxes, you may change fields by pressing the TAB key or by clicking with the mouse. Some items are pre-selected (highlighted) for convenience and may be selected by pressing the RETURN key. If you wish to make another choice, press TAB to highlight another box and press the space bar or RETURN; or, use the mouse to move the pointer to the appropriate box and click.

C. Manual calibration

Before the first assay of the day, or if the automatic calibration routine fails, it will be necessary to perform a manual energy calibration of the system.

To calibrate the PINS system, several steps are required:

1. Check the coarse and fine gain settings, and pole zero the amplifier. Then adjust the fine gain, if necessary, so that the hydrogen peak falls in channel 1600, ± 10 channels.

2. Assay an object containing iron, for at least 200 seconds. If the item under test is made of aluminum, set a crescent wrench in front of the detector.

3. Find the centroid channel of the hydrogen peak at 2223.25 keV and either one of the iron doublet full energy peaks, either 7631.13 keV or 7645.45 keV. Enter these data into the CALIBRATION routine under the CALCULATE pull-down menu. The spectrum is now manually calibrated.

The first two steps are normally performed when the system is first powered up. Unless there has been a failure of the computer or MCA, only steps 2 and 3 must be performed. For completeness, the entire procedure is outlined below.

1. Gain adjustment

a. Select 92x control from the acquire pull-down menu.

   i. Check that the short shaping time is selected.

   ii. Check that the coarse gain radio button labeled x10 is selected.

   iii. Set the overall gain to about 6.4.

   iv. Click trigger in the pole zero box. Observe that the notation Pole Zero Complete appears at the bottom of the screen.

b. Slide the detector out of the collimator and point it at the white polyethylene moderator block.

   i. Click start from the acquire menu. Observe that the hydrogen peak at 2223 keV grows in at channel 1600 ± 10 channels. Tweak the fine gain if necessary.

   ii. Re-pole zero if the gain or shaping time was changed. The short shaping time is always used with the PINS system.

   iii. Click stop. Click escape.

   iv. Return the detector to its normal position in the bismuth collimator.

2. Begin assay

a. Set desired live time with the Preset selection under the Acquire menu.

b. Choose Clear and Start from the Acquire menu. After 200 seconds or more have elapsed, press alt 5 or choose mcb -> buffer from the Acquire menu to transfer the spectrum to the buffer. The spectrum will continue to accumulate in the MCA while you complete the calibration.

c. If the spectrum to be calibrated has already been saved, skip steps a. and b. above. Select Recall from the File menu. Click the cursor on the spectrum ID to be recalled; then click OK.

3. Calibrate

a. If the buffer is not already displayed, either press alt 6, select mcb/buffer from the display menu, or click the buffer radio button at the top right corner of the screen.

b. Locate the hydrogen peak. The 2223.25 keV hydrogen full energy peak is normally the strongest feature near channel 1600.

   i. Place the pointer near the hydrogen peak and click once to set the cursor position. Select the Expand radio button on the right side of the screen or press function key F4. Adjust the width of the display to 256 channels by clicking the appropriate icon just below the Expand radio button. The vertical scale is most easily adjusted with the vertical arrow keys.

   ii. Hold down the control key and use the right or left arrow key to move the hydrogen peak to the center of the display.

iii. Press alt C or select Calibrate from the Calculate menu.

iv. Enter the energy of the hydrogen peak, 2223.25, in the dialog box. Press enter.

v. Press F3 or click the Full radio button at the top right of the display to zoom out to the full spectrum display.

c. Locate the iron doublet full energy peaks.

i Click the cursor on the iron doublet full energy peaks at 7631.13 and 7645.45 keV, usually found between channels 5500 and 5550. Expand the spectrum to 256 channels centered roughly on the iron doublet. Adjust the vertical with the arrow keys so that the peaks are clearly visible.

ii. Move the cursor to the centroid of one of the iron doublet peaks using the control right arrow/left arrow key combinations.

iii. Press alt C or select Calibrate from the Calculate menu.

iv. Enter the energy of the selected iron peak, 7631.13 for the left peak, 7645.45 for the right peak, in the dialog box. Press enter.

v. The a new dialog box will appear, prompting you for the calibration units. The correct response, of course, is keV. Click O.K.

d. The spectrum is now calibrated. To check the calibration, revisit the hydrogen peak, click the cursor on the channel closest to the centroid, and verify that the energy is 2223 ± 1 keV. Check a few other known peaks to insure that the energy calibration is correct.

e. If it is not possible to calibrate with iron, as with M-55 rockets and other aluminum-cased items, it is often possible to perform the energy calibration with the hydrogen peak and the 7723.85 aluminum peak. This peak is normally found near channel 5575.

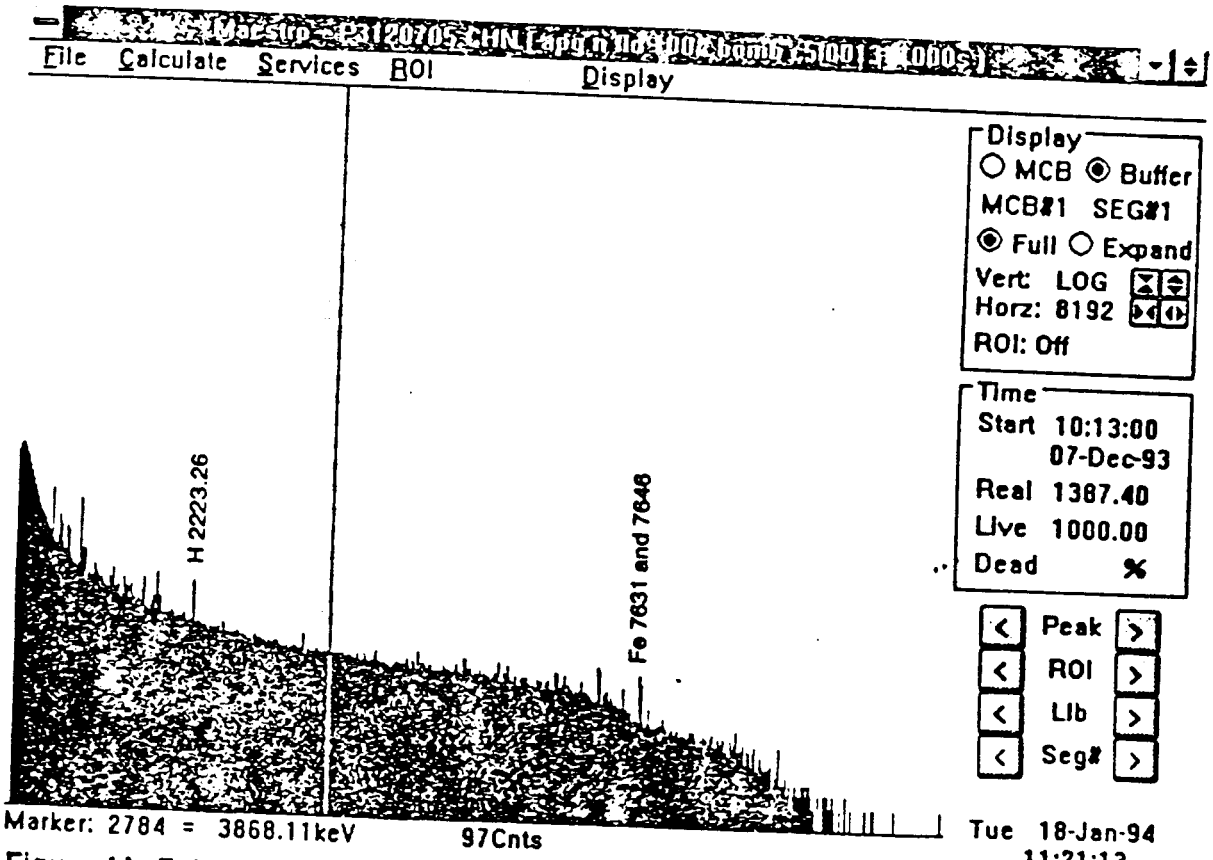

Figure 4A: Full view of a spectrum

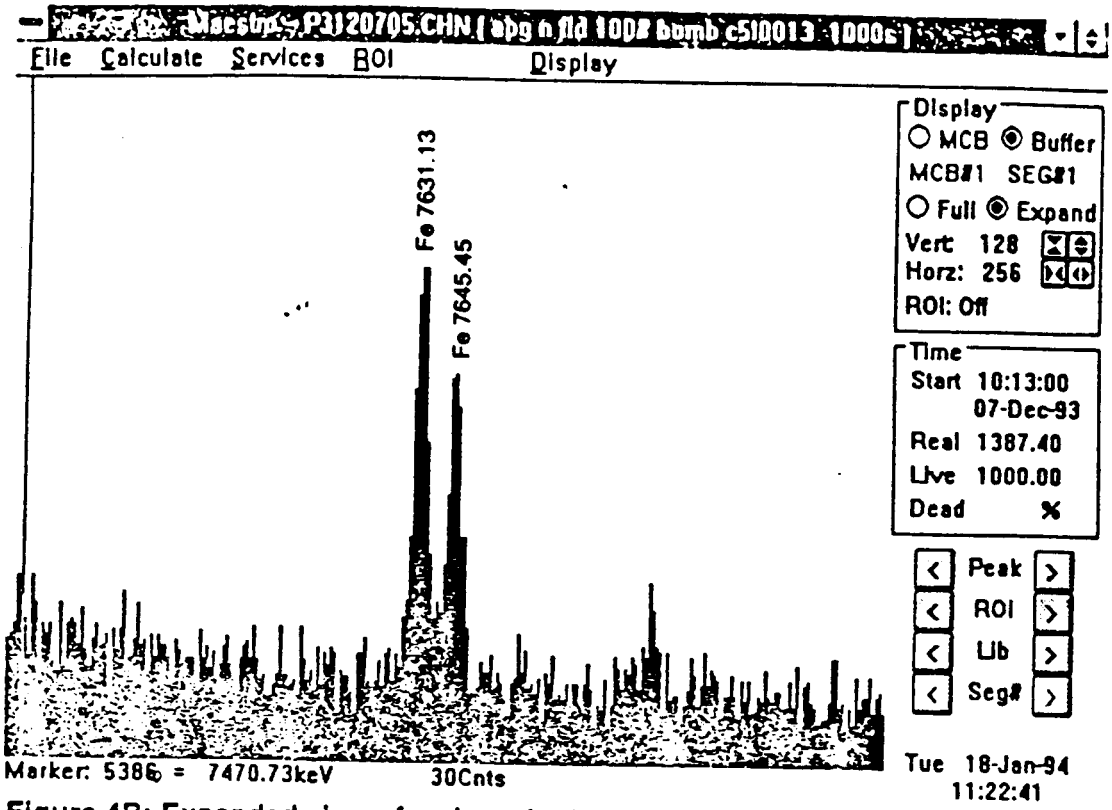

Figure 4B: Expanded view of an iron doublet.

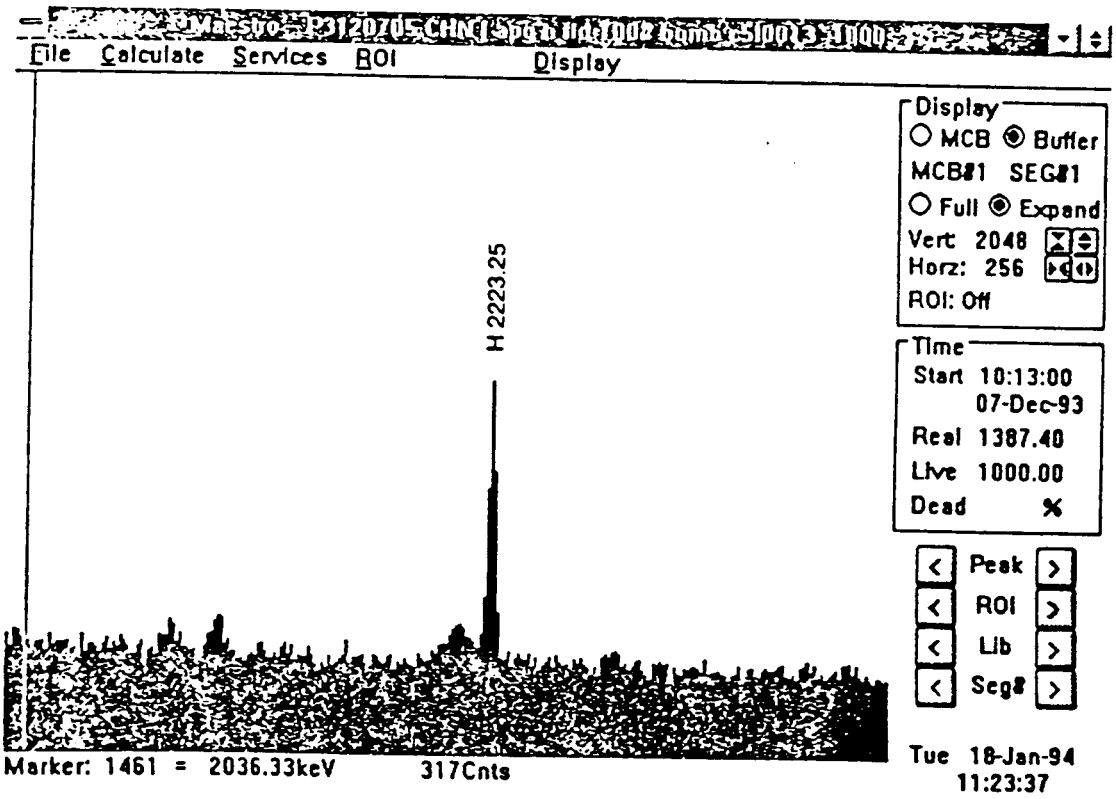

Figure 4C: Expanded view of the hydrogen peak.

f. If a spectrum is acquiring in the MCB during calibration, the calibration is automatically transferred to the MCB.

4. Analysis with manual calibration

This procedure is to be used when the atuomatic analysis is inapprpriate or does not furnish correct or accurate results. The analysis is basically the same as that performed by the Auto Analysis program, except that it does not perform the automatic calibration.

1. Return to the desktop.

2. Double-click the Analysis icon. Select the name of the file you wish to analyze. (You may need to select a different directory to locate the file.) Select ANALYZE ONLY from the ANALYSIS menu.

3. When the analysis is completed, the program will display an assessment of the fill in the munition analyzed and the confidence level of the reported elements.

Press exit to return to the desktop if no further analyses are required.

Table 4A: Keyboard shortcuts

The following keystrokes may be used to replace mouse functions in the Maestro application.

Acquisition

Alt 1	Start data acquisition
Alt 2	Stop data acquisition
Alt 3	Clear data and collection times
Alt 4	Switch between full and expanded display (can also use F3)
Alt 5	Transfer data to the buffer
Alt 6	Switch between MCB display and buffer display

Miscellaneous

Esc	Cancel/Return to previous display
Alt x	Access menu (x is the underlined character in the menu name)
↑	Increase vertical scale
↓	Decrease vertical scale

Cursor Positioning

→	Move channel pointer 1 channel to right
←	Move channel pointer 1 channel to left
Pg Up	Move channel pointer 128 channels to right
Pg Dn	Move channel pointer 128 channels to left
Home	Move channel pinter to channel 0
End	Move channel pointer to channel 8191
Ctrl →	Jump to next higher peak centroid
Ctrl ←	Jump to next lower peak centroid
Alt →	Jump to next higher library energy
Alt ←	Jump to next lower library energy

Chapter 5: Care and Maintenance

The PINS equipment is comprised of highly-sensitive equipment. Since it will be used in the field in sometimes unpredictable environments, proper care and maintenance is critical.

A. Detector care

To operate properly, the detector must be cold during use. To ensure that it is always ready to be used in the field, it is best to store the detector on the mother dewar. See Chapter 2 for instructions on setting up and filling the mother dewar and attaching the detector.

1. Keeping the dewar clean and dry

The dewar neck plug must always be in place on the detector except when the detector is being filled or is attached to the mother dewar. This helps prevent dirt and moisture from entering the dewar and provides insulation in the neck for increased holding time.

Ice forms with an excessive accumulation of moisture and can cause serious problem. If the detector has been warmed up, it is recommended that the dewar be purged with dry, room-temperature nitrogen gas for five to 10 minutes to remove any moisture before filling with liquid nitrogen.

The dewar neck plug must be wiped free of any dirt, ice, or moisture before it is replaced after filling. A layer of ice in the dewar could prevent the detector from reaching its operating temperature. It is possible that severe ice blockage of the dewar neck could result in the explosion of the dewar.

2. Dewar pop-off valves

At the top of the dewar neck there are two pressure-relief pop-off valvaes. One of these relases at 1 - 2 psig, and the other releases at 10 psig. Under normal circumstances, the 1 -2 psig valve relieves the internal dewar pressure and maintains it at this level. If this valve should become blocked, the 10-psig valve serves as a backup to prevent the buildup of dangerous pressure. Since the 10-psig valve is normally closed, it is not likely to become blocked by ice or dirt.

These pop-off valves are important to the safety and function of your detector system. They must be protected from damage. Do not pry them open with a screwdriver or pliers. Never prop them open by inserting an object into the valve. Periodically, it is normal for these valves to make a sputtering or vibrating sound as pressure is relieved.

Under some circumstances (if the detector is enclosed in a small space), it may be advisable to vent your detector's dewar to a remote location. In this case, a piece of clear plastic tubing (eg., Tygon tubing) may be pushed over the 1 - 2 psig pressure valve and routed to another location. If this tubing is too small in diameter and fits too tightly, it may block the pop-off valve. Be sure that the tubing used is large enough to eliminate the possibility of blockage. Look at the valve through the tubing to see that it is venting properly.

3. Protecting the detector from contaminants

The electronics housing and cable connectors on the standard detector are not completely impervious to moisture, dirt, sand, or other contaminants.

To use the detector in an area of high humidity (condensing atmosphere), enclose the system in a loose-fitting plastic bag. The bag may be taped shut, but not airtight, around the cables coming from the detector. The nitrogen evolved from the dewar will soon fill the bag with clean, dry gas. Unless the ambient temperature is unusually low (<0° C), there should be sufficient heat transfer through the bag to prevent the detector from getting too cold. The bag should be of a single layer, no more than 0.15-mm thick to ensure against excessive insulation. *Do not store a cold detector in this bag or any other enclosure besides the designated carrying case.*

The detector should not be exposed to conditions

where dirt, sand, dust, or other particles are blown through the air. A plastic bag as described above may be used for protection under such conditions.

B. Protecting cables

If the connectors at both ends are protected, dragging cables over the ground should not cause damage.

The cables have strain relief provided. However, these cables and their connectors are not strong enough to withstand excessive tension. Do not attempt to pull the cable by the detector; secure them to the operator's belt or pull by hand to relieve strain. Do not attempt to hang or to lower and raise the detector by the cables.

C. MCA and PC maintenance

Both the MCA and the PC are self-contained in carrying cases. Be sure to disconnect all cables and latch the cases securely before transporting them.

Neither the MCA or the PC has any user-serviceable parts. If an equipment malfunction occurs, return the item to EG&G Idaho or to the manufacturer for repair.

D. Battery charging

The computer's battery recharges whenever the computer is connected to AC power. The nominal charging time is two hours. The MCA batteries require overnight charging. Place the MCA power switch in the "charge" position for this purpose.

E. Radioactive sources

The PINS californium-252 source itself requires no maintenance. Occasionally check that its lanyard is securely attached and has not been frayed. The shipping container for the source may be dented in transit; if the shipping container is damaged or it is difficult to replace and seal the lid, please arrange to obtain a spare container from INEL.

Chapter 6: Common Operation Problems

Below are listed a number of problems that may be encountered with the PINS system, either because of improper set-up or equipment error. If the solutions in this section do not resolve the problem, or if a particular problem is not listed, call for technical support at (208) 526-1053.

A. Powering the MCA

Symptom: Nothing happens when the power is turned on.

- If operating with AC power, check to see that the AC line cord is firmly plugged into the receptacle on the MCA.
- If operating under battery power, make sure it has been charged overnight.

Symptom: MCA displays "Comm. Failure MCB #1" when the Maestro Application is started, and the MCB mode cannot be selected, yielding an "Illegal MCB" error. ACQUIRE menu is grayed and unselectable.

- Improper power-on sequence. Always power the MCA first, then the computer.
- Check that the MCA low battery LED is not on, indicating its battery must be recharged or the unit powered from the AC line.
- Check to see that the blue/black twisted wire is plugged into the MCA.
- See that the ribbon connector is properly seated at the computer and MCA connections by turning the power to computer and MCA off and reseating the connectors. Reapply power in proper sequence.

Symptom: High-voltage bias will not turn on.

- Be sure that the detector has not warmed up.
- Ensure that the BIAS SHUTDOWN cable on the detector is connected to the REMOTE SHUTDOWN on the MCA. The bias will not come on if no input is connected. If the BIAS SHUTDOWN is not used, connect a terminator to the BIAS SHUTDOWN cable connector on the MCA. To protect the HPGe detector, it is strongly recommended that the BIAS SHUTDOWN protection circuit be used at all times.

Symptom: MCA displays "High Voltage not enabled" error message.

- Check if HV is turned on
- If not, run up HV and pole-zero
- If HV is on, run down to zero volts, turn off, then on, and run back up. Pole zero.

Symptom: MCA displays "Amplifier not Pole Zeroed" error message.

- Re-pole zero.

Symptom: Pole zero operation does not complete in a few seconds.

- Make sure that the detector output signal is connected to the MCA input, and not, say, to the INH or inhibit connector. The INH connector is not used with the PINS system.
- Check that high voltage has been applied to the detector.

Symptom: MCA displays "HV failed" error message.

- Check if HV is turned on.
- If not, run up HV and pole-zero.
- If HV is on, run down to zero volts, turn off, then on, and run back up. Pole zero.

Symptom: Dead Time is 100% and no data is being taken when the MCA is started.

- Make sure that the amplifier has been pole-zeroed. The MCA has a computer-controlled Auto-PZ circuit that is controlled by the Maestro MCA Emulation software. Refer to Chapter 3, section A -1. for directions.
- Raise the LLD voltage using the screwdriver adjustment on the top of the MCA.

Symptom: MCA displays "No Pole Zero error message

- Re-pole zero.

Symptom: Pole-zero operation does not complete in a few seconds.

- Make sure that the detector output signal is connected to the MCA input, and not, say, to the INH or inhibit connector. The INH connector is not used with the PINS system.
- Check that high voltage has been applied to the detector.

B. Acquisition of spectra

Symptom: Energy scale changes from one count to the next.

- A change in the count rate that results in a >10% change in the dead time can cause a change in the energy scale. Recalibrate the spectrometer using manual calibration, or wait until the spectrum is acquired and use the automatic analysis feature that includes an automatic energy calibration.

C. Archiving spectra

Symptom: Unable to store a spectrum on the disk.

- The spectrum identification should not exceed eight alphanumeric characters.

Elemental composition, in weight %, of CW agents*

	Sarin (GB)	Soman (GD)	Tabun (GA)	VX	Mustard (H)	Lewisite (L)
Hydrogen	7.1	8.8	6.8	9.7	5.0	1.0
Carbon	34.3	46.2	37.0	49.4	30.2	11.4
Oxygen	22.9	17.6	19.8	12.0		
Nitrogen			17.3	5.2		
Fluorine	13.6	10.4				
Aluminum						
Phosphorus	22.1	17.0	19.1	11.6		
Sulfur				12.0	20.1	
Chlorine					44.7	51.3
Arsenic						36.1

*S. Budavari, ed., *The Merck Index, Eleventh Edition* (Rahway, N.J: Merck & Co., Inc., 1989)

Elemental composition, in weight%, of typical military high explosives.*

	Comp. B	HMX	PETN	RDX	TNT	Tritonal
Hydrogen	2.5	2.7	2.5	2.7	2.2	1.2
Carbon	24.5	16.2	19.0	16.2	37.0	20.2
Oxygen	42.8	43.2	60.8	43.2	42.3	23.1
Nitrogen	30.4	37.8	17.7	37.8	18.5	10.1
Fluorine						
Aluminum						45.4

*R. Meyer, *Explosives, Third Edition* (New York: VCH Publishers, 1987)

Elemental composition, in weight%, of military smokes.*

	FM	FS	Fuming Sulfuric Acid	HC	WP
Hydrogen		0.4	1.4		
Carbon		51.5	63.7	4.7	
Oxygen				9.2	
Nitrogen					
Aluminum					
Titaninum	25.3			6.7	
Phosphorus					
Sulfur		34.4	34.9		100
Chlorine	74.7	13.7			
Zinc				41.9	
				37.5	

*Military Chemistry and Chemical Compounds, U.S. Army Field Manual FM 3-9, October 1975. A.M. Prentiss, *Chemistry in War*, (New York: McGraw-Hill, 1937).

Simplified decision tree

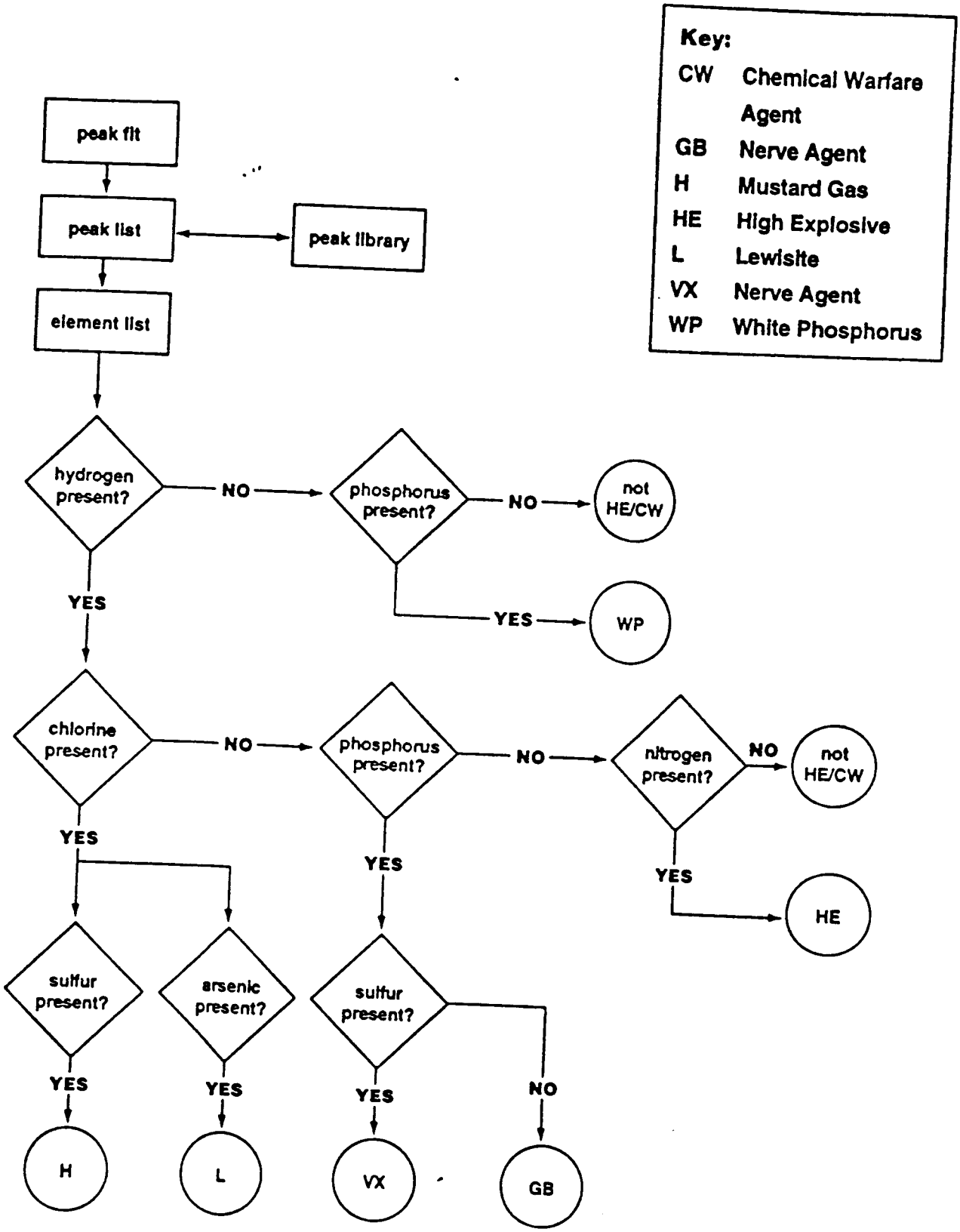

Energy and relative intensity of selected capture gamma rays, ordered by element.

Element	Energy (keV)	Intensity (gamma rays per 100 captures)	Remarks
Aluminum			
A = 27.0	248.9	6.8	
σ = 0.23	2960.0	8.0	
	7723.85	27.4	
Arsenic			
A = 74.9	164.6	16.8	
σ = 4.3	471.9	3.6	
	1534.3	7.2	
	6809.6	3.3	
Bismuth			
A = 209.0	4054.7	36.5	
σ = 0.032	4101.8	24.4	
	4171.1	50.8	
Boron			
A = 10.8	4443.0	76.0	
σ = 0.1	6759.3	39.5	
	7005.1	47.9	
Calcium			
A = 40.1	1942.0	72.6	
σ = 0.43	4418.9	14.9	
	6419.9	38.9	
Chlorine			
A = 35.4	516.7	18.5	
σ = 33.2	788.4	15.0	
	1164.7	19.9	
	1950.9	21.7	
	1959.1	14.6	
	6110.9	20.0	
	7413.8	10.4	
Fluorine			
A = 19.0	582.2	13.0	
σ = 0.0095	2452.8	10.2	
	3589.3	11.1	
Iron			
A = 55.8	352.2	11.7	
σ = 2.6	1260.6	2.57	
	1612.7	6.0	
	1725.1	8.0	
	5920.3	9.0	
	6018.5	9.0	
	7631.13	28.5	
	7645.45	24.1	
	9298.4	4.1	
Germanium			
A = 72.6	596.4	33.1	
σ = 2.3	868.4	14.8	
	3028.0	39.0	
Hydrogen			
A = 1.0	2223.25	100.0	
σ = 0.33			
Nitrogen			
A = 14.0	1884.8	21.6	
σ = 0.075	5269.2	29.7	
	5298.0	21.0	
	10829.2	14.1	
Phosphorus			
A = 31.0	636.2	12.2	
σ = 0.18	2154.2	15.2	
	3900.3	16.0	
	6785.3	13.0	
Silicon			
A = 28.1	1273.3	15.9	
σ = 0.16	2092.9	21.5	
	3539.1	68.0	
	4934.4	62.7	
Sulfur			
A = 32.1	841.1	75.6	
σ = 0.52	2379.7	44.5	
	3220.8	27.1	
	5420.5	59.1	
Titanium			
A = 47.9	341.7	26.27	
σ = 6.1	1381.5	69.1	
	6418.3	30.1	
	6759.8	24.2	
Tungsten			
A = 183.9	199.3	56.5	
σ = 18.5	551.6	4.0	
	6190.2	4.8	
Zinc			
A = 65.38	1077.4	18.9	
σ = 1.1	1883.9	6.8	
	7863.3	10.6	

M.A. Lone, R.A. Leavitt, and D.A. Harrison, "Prompt Gamma Rays from Thermal-Neutron Capture", *Atomic Data and Nuclear Data Tables, 26*, p. 511 (1981).

Energy and relative intensity of selected neutron inelastic scattering gamma rays, ordered by element.

Element	Energy (keV)	Relative Intensity %	Remarks
Aluminum			
	843.8	60	
	1014.4	100.0	
	2211.8	52.0	
Arsenic			
	198.6	41.0	
	264.7	67.0	
	279.5	100.0	
	572.5	29.0	
Bismuth			
	246.2	19.0	
	896.2	100.0	
	1609.0	66.0	
Boron			
	477.7	1048.0	Broad
	2124.0	100.0	
	4442.2	38.0	
Calcium			
	770.3	204.0	
	891.6	59.0	
	1156.9	87.0	
	3736.9	123.0	
	3904.2	100.0	
Chlorine			
	1219.5	100.0	
	1763.3	129.0	
	2545.7	25.7	
Fluorine			
	197.1	2700.0	
	1235.8	100.0	
	1348.0	120.0	
	1356.5	265.0	
Iron			
	846.8	100	
	1238.3	10.5	
	1810.5	6.9	
Germanium			
	562.9	20.0	
	595.9	100.0	
	743.3	20.0	
	834.0	36.0	
	1039.5	32.0	
Nitrogen			
	729.6	12.0	
	1634.2	67.0	
	2312.8	100.0	
Phosphorus			
	1266.1	100.0	
	2028.4	6.2	
	2233.4	29.0	
Silicon			
	1272.8	4.2	
	1778.8	100.0	
Sulfur			
	1273.0	13.0	
	2230.2	100.0	
Titanium			
	159.4	17.0	
	889.2	9.7	
	983.5	100.0	
Tungsten			
	199.3	56.5	
	551.6	4.0	
	6190.2	4.8	
Zinc			
	991.5	100.0	
	1039.2	57.0	
	1077.4	34.0	

A.M. Demidov et al., *Atlas of Gamma-Ray Spectra from the Inelastic Scattering of Reactor Fast Neutrons* (Moscow: Atomizdat, 1978).

Selected neutron capture and neutron inelastic scattering gamma rays, ordered by energy.

Energy (keV)	Element	Reaction	Other lines	Remarks
159.4	titanium	(n, n'γ)	889.2, 983.5	
164.6	arsenic	(n, γ)	471.9, 1534.3	
197.1	fluorine	(n, n'γ)	1235.8, 1356.5	
198.6	arsenic	(n, n'γ)	264.7, 279.5	
199.3	tungsten	(n, n'γ)	551.6, 6190.2	
199.3	tungsten	(n, γ)	551.6, 6190.2	
246.2	bismuth	(n, n'γ)	896.2, 1609.0	
248.9	aluminum	(n, γ)	2960.0, 7723.9	
264.7	arsenic	(n, n'γ)	198.6, 279.5	
279.5	arsenic	(n, n'γ)	198.6, 264.7	
341.7	titanium	(n, γ)	1381.5, 6418.3	
352.2	iron	(n, γ)	1725.1, 7631.13	
471.9	arsenic	(n, γ)	164.6, 1534.3	
477.7	boron	(n, n'γ)	2124.0, 4442.2	Doppler broadened
516.7	chlorine	(n, γ)	1950.9, 6110.9	
551.6	tungsten	(n, n'γ)	199.3, 6190.2	
551.6	tungsten	(n, γ)	199.3, 6190.2	
562.9	germanium	(n, n'γ)	595.9, 843.0	
572.5	arsenic	(n, n'γ)	264.7, 279.5	
582.2	fluorine	(n, γ)	2452.8, 3589.3	
595.9	germanium	(n, n'γ)	562.9, 843.0	
596.4	germanium	(n, γ)	868.4, 3028.0	
636.2	phosphorus	(n, γ)	2154.2, 3900.3	
729.6	nitrogen	(n, n'γ)	1634.2, 2312.8	
743.3	germanium	(n, n'γ)	595.9, 843.0	
770.3	calcium	(n, n'γ)	1156.9, 3736.9	
788.4	chlorine	(n, γ)	1950.9, 6110.9	
834.0	germanium	(n, n'γ)	595.9, 1039.5	
841.1	sulfur	(n, γ)	2379.7, 5420.5	
843.8	aluminum	(n, n'γ)	1014.4, 2211.8	
846.8	iron	(n, n'γ)	1238.3, 1810.5	
868.4	germanium	(n, γ)	596.4, 3028.0	
889.2	titanium	(n, n'γ)	159.4, 983.5	
891.6	calcium	(n, n'γ)	770.3, 3736.9	
896.2	bismuth	(n, n'γ)	246.2, 1609.0	
983.5	titanium	(n, n'γ)	159.4, 983.5	
991.5	zinc	(n, n'γ)	1039.2, 1077.4	
1014.4	aluminum	(n, n'γ)	843.8, 2211.8	
1039.2	zinc	(n, n'γ)	991.5, 1077.4	

Energy (keV)	Element	Reaction	Other lines	Remarks
1039.5	germanium	(n, n'γ)	595.9, 843.0	
1077.4	zinc	(n, γ)	1883.9, 7863.3	
1077.4	zinc	(n, n'γ)	991.5, 1039.2	
1156.9	calcium	(n, n'γ)	770.3, 3736.9	
1164.7	chlorine	(n, γ)	1950.9, 6110.9	
1219.5	chlorine	(n, n'γ)	1763.3, 2545.7	
1235.8	fluorine	(n, n'γ)	197.1, 1356.5	
1238.3	iron	(n, n'γ)	846.8, 1810.5	
1260.6	iron	(n, γ)	1725.1, 7631.13	
1266.1	phosphorus	(n, n'γ)	2028.4, 2233.4	
1272.8	silicon	(n, n'γ)	1778.8	
1273.0	sulfur	(n, n'γ)	2230.2	
1273.3	silicon	(n, γ)	3539.1, 4934.4	
1348.0	fluorine	(n, n'γ)	197.1, 1356.5	
1356.5	fluorine	(n, n'γ)	197.1, 1348.0	
1381.5	titanium	(n, γ)	341.7, 6418.3	
1534.3	arsenic	(n, γ)	164.6, 471.9	
1609.0	bismuth	(n, n'γ)	246.2, 896.2	
1612.7	iron	(n, γ)	1725.1, 7631.13	
1634.2	nitrogen	(n, n'γ)	729.6, 2312.8	
1725.1	iron	(n, γ)	1612.7, 7631.13	
1763.3	chlorine	(n, n'γ)	1219.5, 2545.7	
1778.8	silicon	(n, n'γ)	1272.8	
1810.5	iron	(n, n'γ)	846.8, 1238.3	
1883.9	zinc	(n, γ)	1077.4, 7863.3	
1884.8	nitrogen	(n, γ)	5269.2, 10829.2	
1942.0	calcium	(n, γ)	4418.9, 6419.9	
1950.9	chlorine	(n, γ)	1164.7, 6110.9	
1959.1	chlorine	(n, γ)	1950.9, 6110.9	
2028.4	phosphorus	(n, n'γ)	1266.1, 2233.4	
2092.9	silicon	(n, γ)	3539.1, 4934.4	
2124.0	boron	(n, n'γ)	477.7, 4442.2	
2154.2	phosphorus	(n, γ)	636.2, 3900.3	
2211.8	aluminum	(n, n'γ)	843.8, 1014.4	
2223.25	hydrogen	(n, γ)		
2230.2	sulfur	(n, n'γ)	1273.0	
2233.4	phosphorus	(n, n'γ)	1266.1, 2028.4	
2312.8	nitrogen	(n, n'γ)	729.6, 1634.2	
2379.7	sulfur	(n, γ)	841.1, 5420.5	
2452.8	fluorine	(n, γ)	582.2, 3589.3	
2545.7	chlorine	(n, n'γ)	1219.5, 1763.3	
2960.0	aluminum	(n, γ)	248.9, 7723.9	

Energy (keV)	Element	Reaction	Other lines	Remarks
3028.0	germanium	(n, γ)	596.4, 868.4	
3220.8	sulfur	(n, γ)	841.1, 5420.5	
3539.1	silicon	(n, γ)	2092.9, 4934.4	
3589.3	fluorine	(n, γ)	582.2, 2452.8	
3736.9	calcium	(n, n'γ)	770.3, 3904.2	
3900.3	phosphorus	(n, γ)	2154.2, 6785.3	
3904.2	calcium	(n, n'γ)	770.3, 3736.9	
4054.7	bismuth	(n, γ)	4101.8, 4171.1	
4101.8	bismuth	(n, γ)	4054.7, 4171.1	
4171.1	bismuth	(n, γ)	4054.7, 4101.8	
4418.9	calcium	(n, γ)	1942.0, 6419.9	
4442.2	boron	(n, n'γ)	477.7, 2124.0	
4443.0	boron	(n, γ)	6759.3, 7005.1	
4934.4	silicon	(n, γ)	2092.9, 3539.1	
5269.2	nitrogen	(n, γ)	5298.0, 10829.2	
5298.0	nitrogen	(n, γ)	5269.2, 10829.2	
5420.5	sulfur	(n, γ)	841.1, 2379.7	
5920.3	iron	(n, γ)	1725.1, 7631.13	
6018.5	iron	(n, γ)	1725.1, 7631.13	
6110.9	chlorine	(n, γ)	1164.7, 1950.9	
6190.2	tungsten	(n, n'γ)	199.3, 551.6	
6190.2	tungsten	(n, γ)	199.3, 551.6	
6418.3	titanium	(n, γ)	341.7, 1381.5	
6419.9	calcium	(n, γ)	1942.0, 4418.9	
6759.3	boron	(n, γ)	4443.0, 7005.1	
6759.8	titanium	(n, γ)	1381.5, 6418.3	
6785.3	phosphorus	(n, γ)	2154.2, 3900.3	
6809.6	arsenic	(n, γ)	164.6, 471.9	
7005.1	boron	(n, γ)	4443.0, 6759.3	
7413.8	chlorine	(n, γ)	1950.9, 6110.9	
7631.13	iron	(n, γ)	1612.7, 7645.45	
7645.45	iron	(n, γ)	1612.7, 7631.13	
7723.85	aluminum	(n, γ)	248.9, 2960.0	
7863.3	zinc	(n, γ)	1077.4, 1883.9	
9298.4	iron	(n, γ)	1725.1, 7631.13	
10829.2	nitrogen	(n, γ)	5269.2, 5298.0	

M.A. Lone, R.A. Leavitt, and D.A. Harrison, "Prompt Gamma Rays from Thermal-Neutron Capture", *Atomic Data and Nuclear Data Tables, 26*, p. 511 (1981).

A.M. Demidov et al., *Atlas of Gamma-Ray Spectra from the Inelastic Scattering of Reactor Fast Neutrons* (Moscow: Atomizdat, 1978).

File name: _____.CHN

Date: _____

PINS System _____

ACQUISITION DATA

Known fill material: _____

Source and size: _____

Count time (live): _____seconds

Dead time: _____%

Sample/munition type: _____

Sample ID#: _____

Archived Spectrum Directory: _____

COMPUTER ANALYSIS

Agent identified: _____

Element	Reported Confidence Level
Cl	
S	
P	
N	
As	
Fe	
H	

COMMENTS AND DRAWINGS: Include drawings of equipment geometry above and note any non-routine settings or events.

_____

_____

_____

_____

LOG____

Index

A

AC power source 7
Analysis program 14
assay configuration 9
assay zone 7

B

battery charging 7, 24
battery, computer 8
bismuth collimator 9
boron carbide plate 9
buffer 14

C

cables 7, 10, 16, 24
californium 252 ii
cheat sheet ..... iii-iv
collimator 9, 10
comm failure 25
confidence levels 12, 15
counting time 12
cryogenic safety 1

D

dead time 9, 13, 24
detector bias 2
detector stand 9

E

electrical safety 2
electroncis 7
energy calibration ..... i, 18
energy resolution 9
error messages:
  comm failure 25
  HV failure 25
  pole zero 26
exclusion area 3

F

file naming 14
filling the mother dewar 5

G

gain adjustment 11, 18
gamma rays ..... i, 2
gamma-ray energies
  ..... iv, App. C, D, E

H

HPGe detector 6
high voltage 7, 8
hydrogen peak 18, 19

I

ice blockage 1, 23
interference 9
inventory 5
iron doublet 14, 18, 19

J

K

keyboard shortcuts ..... iii, 17, 21

L

lifting safety 3
liquid nitrogen 1
live time 13
logbook ..... 16, App. F

M

maintenance .....
manual calibration 18
Microsoft Windows .....
moderator block ..... ii, 9, 10
mother dewar ..... ii, 5, 23
multichannel analyzer ..... ii, 2
munition placement 9

N

neutron source
  californium 252 ii
  handling 10, 24
  radiation safety 2
  storage 2, 24

O

overview i

P

PC operation 17
pole zero adjustment 11
potentiometer 7, 8, 16
power 7
presets 13
protective gear 1, 10

Q

R

radiation safety 2, 10
real time 13
record-keeping 16

S

safe zone 7
saving spectra 14, 25
setup 5
shadow shield ..... ii, 9
shutdown 16
strain-relief clips 7

T

template 16
ton containers 9
transporting detector 6, 23
tungsten blocks 5, 9

U

V

W

X

Y

Z

XX.4.10 **Packaging.**

LETTER OF INSTRUCTION (LOI)
FOR
CONTAINERIZATION OF
RECOVERED CHEMICAL WARFARE MATERIEL
(100 POUNDS NET WEIGHT)
IN SMALL (7-INCH X 27-INCH)
MULTIPLE ROUND CONTAINER (MRC)

U.S. ARMY MATERIEL COMMAND DRAWING

AMSTA-AR-ESK	SFAE-CD-NM PM-NSCM	CHAIRMAN, CHEM-CNT-PAT AMSCB-SO	DRAFTSMAN	I. DEPPS	
			ENGINEER	M. DAEUMER	
			SUPPLY ENGINEERING DIVISION	TRANSPORTATION ENGINEERING DIVISION	VALIDATION ENGINEERING DIVISION

APPROVED BY ORDER OF COMMANDING GENERAL, U.S. ARMY MATERIEL COMMAND

William J Ernst

U.S. ARMY DEFENSE AMMUNITION CENTER

LOGISTICS ENGINEERING OFFICE

William J Ernst

DECEMBER 1997

DRAWING NUMBER

19-48-4578/1

PROJECT CB 96-97

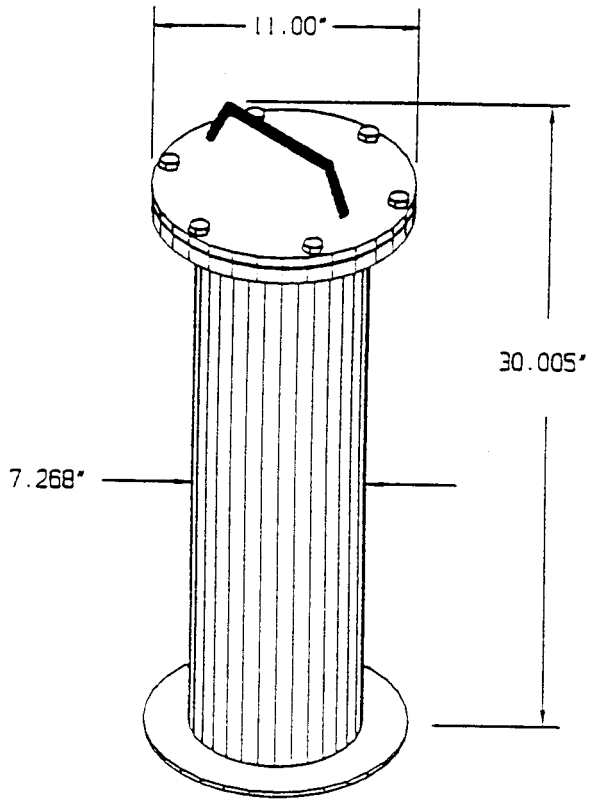

7-INCH X 27-INCH MULTIPLE ROUND CONTAINER (MRC)

DRAWING 19-48-4578/1

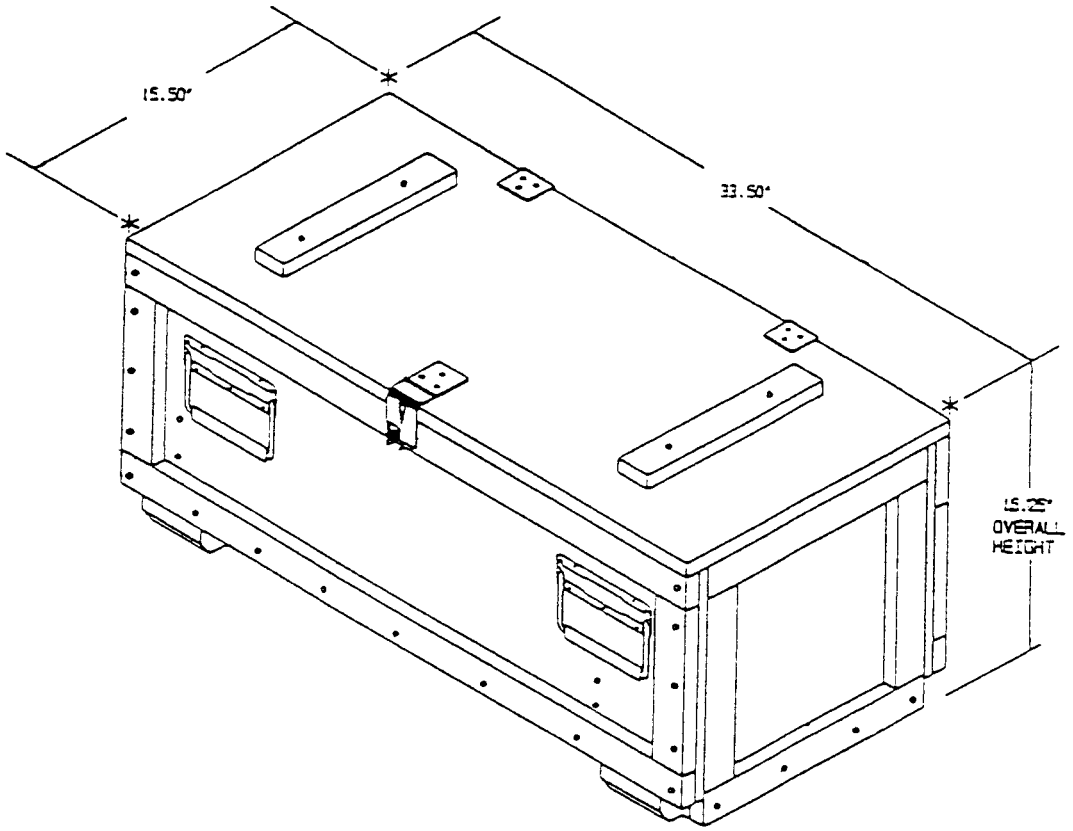

WOODEN OVERPACK CONTAINER FOR 7-INCH X 27-INCH MRC

DRAWING 19-48-4578/1

3. OPERATIONS:

a. Receive supply of MRCs and related components at the MRC preparation area.

SAFETY NOTE: OPERATORS WILL WEAR LEATHER PALM GLOVES, EYE/FACE PROTECTION AND APPROPRIATE FOOTWEAR WHEN CUTTING OR HANDLING STEEL BANDING.

b. Position the wooden overpack container on a level surface. If present, cut the strapping from the wooden overpack container and remove it to a disposal container along with any other non-reusable packaging materials.

c. Open the wooden overpack container and inspect for presence of required components. In addition to the MRC, the wooden overpack container should contain three resealable plastic bags. One bag contains four each 1/2-inch bolts and six lock washers. The second bag contains the butyl rubber o-ring. The third bag contains the plastic flange protector, fiberboard pads and wiping cloths. If all components are not present, close the box and return to receipt area for replacement of missing components and/or request another wooden overpack container with MRC be delivered to the MRC preparation area.

d. Remove the MRC from the wooden overpack container and place standing vertical on a level surface. Prepare and inspect the MRC and associated components as follows:

(1) Inspect MRC and wooden overpack container for intransit damage and missing/broken parts; and mismatched component parts. Reject container exhibiting the following defects:

(a) Any visible damage to the cover or flange.

(b) Extensive damage that will critically change inside container dimensions.

(c) Punctured container body.

(d) Serially numbered components (body and cover) that do not coincide.

(2) Remove the two bolts fastening the cover to the flange. Place the two bolts in the plastic bag containing the other 4 bolts. After removal of cover, visually inspect the machined cover surface. Reject for the following defects:

(a) Bent cover.

(b) Visible scratches extending across the area of seal contact on the cover which cannot be removed with the provided cleaning cloths. The critical area to ensure seal integrity is the area of seal contact with the cover. Mill finish marks are not cause for rejection.

(3) Remove the flange protector and cleaning cloths from the plastic bag. Place the cover in the plastic bag until needed.

(4) Next inspect the flange and container for the following defects: Reject for the following defects.

(a) Bent flange.

(b) Visible scratches extending across the bottom groove of the flange which cannot be removed with the provided cleaning cloths. The critical area to ensure seal integrity is the bottom of the flange groove. Mill finish marks are not cause for rejection

(5) Visually inspect the interior of the MRC for dirt or foreign material which may interfere with loading. Remove any extraneous material that may interfere with loading.

(6) Visually inspect flange and bolt threads for damage. Reject any MRC with damaged bolt hole threads in the flange, pending repair. Reject any bolt with damaged threads, pending replacement.

(a) Repair damaged bolt hole threads on flange by chasing the threads with the appropriate sized thread tap, if available. If repair is unsuccessful or tap is not available, reject the MRC. Place the MRC back in the wooden overpack container, identify the unit as unusable by appropriate marking or tagging and prepare the unit for return to the appropriate repair or maintenance location. Report the rejected container IAW paragraph 2f on page 4.

(b) Reject bolts with damaged threads and obtain replacement bolt.

(7) Clean the flange surface with the lint-free cloth provided. Place the 4-mil plastic bag in the container overlapping the flange at the top. Place the flange protector over the flange to hold the plastic bag in position and to protect the flange while loading the MRC.

(8) Remove the butyl rubber o-ring from its plastic bag. Note that the o-ring was cleaned and tested prior to placing in the plastic bag. Inspect the o-ring for any foreign matter or for any permanent deformation that may have occurred during shipment. Remove any foreign matter with the clean, soft, dry cloth provided. Visually inspect o-ring surface to ensure all foreign matter has been removed. Water stains or discoloration on the o-ring are acceptable. Inspect for any cuts or abrasion of the o-ring surface. Reject any o-ring exhibiting permanent deformation, cuts or abrasions that are evident visually or by feel. Replace the o-ring in the plastic bag provided to protect it until needed.

e. Move MRC and components to the loading area.

NOTE: FOR ALL SUBSEQUENT OPERATIONS, OPERATORS WILL BE IN PROTECTIVE CLOTHING AS SPECIFIED IN THE APPLICABLE OPERATING PROCEDURES.

f. Receive the item to be containerized. Due to remote locations anticipated, handling will be IAW the applicable operating procedures. Chemical agent monitoring will be performed IAW the local Operating Procedures. The item may be received in a plastic bag.

g. Position the MRC to receive the item to be containerized. The MRC will normally be placed in a vertical position. Operators are not precluded from placing the MRC in a horizontal or slanted position if required for operational purposes. Position item for insertion into the container.

h. Test the item prior to insertion into the MRC with appropriate chemical agent monitoring equipment IAW the applicable operating procedures.

i. Insert any packing material which is required to be positioned prior to insertion of the item. Lift the item being containerized straight up to clear the flange area of the awaiting MRC. Insert the item into the MRC. Insert any additional packing material required to fill the MRC and prevent movement of the item containerized.

j. Remove the flange protector. If the flange protector was exposed to agent, place it within the 4-mil bag and tie or tape the 4-mil plastic bag closed, making sure that the bag does not protrude above the flange surface. If the flange protector was not exposed to agent, set it aside for placement in the self-locking bag after removing the o-ring. Place the fiberboard pad(s) provided over the end of the plastic bag to ensure that no parts of the plastic bag are between the mating flange surfaces.

CAUTION: DO NOT USE COMPRESSED AIR TO CLEAN GROOVE IF ITEM WAS CONTAINERIZED AS A LEAKER.

k. After loading the MRC, inspect the flange for any foreign matter. Wipe entire flange surface including the o-ring groove with the clean, soft, lint free, dry cloth provided. Compressed air may be used if available to aid in the cleaning of the groove if the item is not a leaker. Water stains or discoloration on the metal flange which were caused during manufacture or transit are acceptable.

l. Remove the butyl rubber o-ring (PN ACV00504) from the plastic bag and reinspect for foreign material, distortions, cuts or any other noticeable imperfections. Place the o-ring in the o-ring groove of the machined flange.

m. Carefully remove the cover assembly from the plastic bag, wipe the cover with the lint-free cloth and place the cover assembly (ACV00505-1) on the MRC, machined surface to machined surface, aligning the bolt holes as cover is put in place. Rotate the lid to align the serial numbers of the cover and body as near as possible. Keep lateral and rotational movement of the cover assembly against the flange area and o-ring to a minimum.

n. Insert the bolt and lock washer into the closed cover/flange assembly in a 1, 2, 3, 4, 5, 6 sequence. (See diagram 1).

TORQUE
SEQUENCE

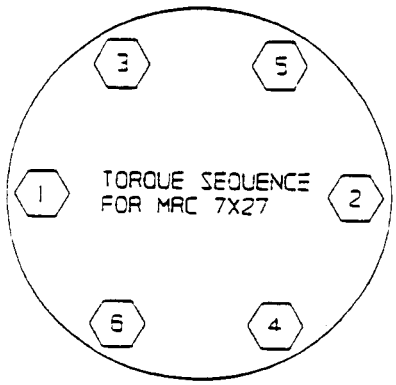

DIAGRAM 1

NOTE: THE FOLLOWING THREE (3) STEPS ARE CRITICAL TO THE OPERATION AND WILL HAVE 100 PERCENT OVER-THE-SHOULDER QUALITY ASSURANCE INSPECTION. ANY DEVIATION/VARIATION FROM THIS PROCEDURE IS CAUSE FOR PROCESS REJECTION AND RE-CONTAINERIZATION:

o. Using the calibrated torque wrench that is set for 20 ft-lbs., tighten the bolts in a 1 thru 6 sequence. (See diagram 1).

p. Using the calibrated torque wrench that is set for 40 ft-lbs., tighten the bolts in a 1 thru 6 sequence. (See diagram 1)

q. Using the calibrated torque wrench that is set for 60 ft-lbs., tighten the bolts in a 1 thru 6 sequence. (See diagram 1)

r. Monitor the MRC with appropriate low-level detection method per local SOP to determine effectiveness of the seal.

(1). If the seal is unsatisfactory, retorque the bolts, verify the MRC cover is properly sealed and recheck.

(2). If a positive test is again received, remove the cover, remove the o-ring, clean the flange and cover surfaces with

a lint free cloth, install a new o-ring and repeat procedure starting at paragraph 3n on page 9.

(3). If a positive test is again received, decontaminate the item per local SOP and repackage in another MRC.

(4). If monitoring is negative, continue with the next step.

s. Ensure markings on pre-marked MRC and wooden overpack container are consistent with the item loaded. Correct missing or erroneous markings prior to packing in the wooden overpack container.

t. Return the MRC to the wooden overpack container. The wooden overpack container can be positioned either vertically or horizontally dependent upon operational preferences. Place the MRC in the overpack container making sure that the top of the MRC is oriented the same as the marked top of the overpack container. Position the top restraint and any other applicable packing material called out in the Special Packaging Instructions (SPI). Close the wooden overpack container lid and secure latch. IAW the SPI, attach a lead wire seal or other specified chain of custody device on the wooden overpack container latch.

u. Move the MRC out of the loading area to prepare for storage, disposal or transportation IAW with applicable operating procedures or site specific directions. Prior to transport or storage, secure two 3/4-inch metal bands around the box.

v. Collect all waste materials generated during the process IAW the local SOP. Stencil or mark waste containers with data concerning their contents as required by applicable regulations. Transfer waste containers and any other remaining supplies and equipment to storage, disposal or transport.

LETTER OF INSTRUCTION (LOI)
FOR
CONTAINERIZATION OF
RECOVERED CHEMICAL WARFARE MATERIEL
(210 POUNDS NET WEIGHT)
IN (9-INCH X 41-INCH)
MULTIPLE ROUND CONTAINER (MRC)

U.S. ARMY MATERIEL COMMAND DRAWING

AMSTA-AR-ESK	SFAE-CD-NM PM-NSCM	CHAIRMAN, CHEM-CNT-PAT AMSCB-SB	DRAFTSMAN	I. DEPPE	
			ENGINEER	M. DAEUMER	
			SUPPLY ENGINEERING DIVISION	TRANSPORTATION ENGINEERING DIVISION	VALIDATION ENGINEERING DIVISION
APPROVED BY ORDER OF COMMANDING GENERAL, U.S. ARMY MATERIEL COMMAND U.S. ARMY DEFENSE AMMUNITION CENTER			LOGISTICS ENGINEERING OFFICE		
			MAY 1998		
			DRAWING NUMBER 19-48-4578/2		

PROJECT CB 96-97

TABLE OF CONTENTS

1.	INTRODUCTION	PAGE 3
2.	DESCRIPTION	PAGES 3 THRU 7
3.	OPERATIONS	PAGES 8 THRU 11

LOI FOR THE CONTAINERIZATION OF RCWM IN 9-INCH X 41-INCH MRC

1. INTRODUCTION:

This Letter of Instruction (LOI) contains procedures for containerization of recovered Chemical Warfare Materiel (RCWM), leaking or non-leaking, in the 9-inch X 41-inch MRC. The MRC has been POP (Performance Oriented Packaging) tested for 141kg (310 lbs) gross weight 95kg (210 lbs) net weight. The technical requirements and procedures contained herein are mandatory and shall be incorporated into the local Operating Procedure. This LOI is limited to the preparation and use of the 9-inch X 41-inch MRC. Users are responsible for incorporating all applicable standards, regulations and safe operating practices in the operating procedures applicable to the specific operation for which the MRCs will be used. This LOI does not attempt to define levels of personal protective clothing or equipment required by operators nor does it specify monitoring methods required to determine levels of respiratory protection.

2. DESCRIPTION:

a. The procedures described in this LOI are written to provide a safe and acceptable method of preparing the 9-inch X 41-inch MRC for containerization of RCWM for storage and/or transportation.

b. The 9-inch X 41-inch MRC is fabricated IAW U.S Army Defense Ammunition Center (DAC) U.S. Army Materiel Command (AMC) Drawing No. ACV00507. When received, the MRC and associated components (bolts, washers, o-ring, wipe cloths, 4-mil plastic bag, flange protector and fiberboard discs) will be packed in a wooden overpack container (IOC) Drawing ACV00574).

c. Supplies and equipment such as torque wrenches, the plastic bag used to encapsulate the item prior to insertion into the MRC and equipment/devices to hold, handle or lift the MRC will be identified in the applicable operating procedures and be provided by the operating element.

d. All requests for information concerning this LOI or equipment associated with this item will be addressed to the following:

Project Manager for Non-Stockpile Chemical Materiel
ATTN: SFAE-CD-NM
Aberdeen Proving Ground, MD 21010-5401
Telephone: Commercial: (410) 612-8738
DSN: 584-8738
Datafax: Commercial: (410) 612-8737
DSN: 584-8737

e. Marking:

(1) MRC. The MRC will be received with United Nations Performance Oriented Packaging (UN POP) markings applied. The proper shipping name must be applied prior to use of the container. Detailed marking information is contained in the Special Packaging Instruction (SPI) (AD) P 1365 ESK/MRC-2.

(2) Wooden Overpack Container. The wooden overpack container will be received with the UN POP markings and applicable SPI and Certificate of Equivalence (COE) or Competent Approval Authority (CAA) identification markings applied. User must apply the proper shipping name and stock number (National Stock Number (NSN), Management Control Number (MCN),or Part Number (PN)), as

applicable, for the materiel to be shipped, to the top of the overpack container. The gross weight and item nomenclature and quantity should be applied to the front side of the wooden overpack container. Detailed marking instructions are contained in the SPI (AD) P 1365 ESK/MRC-2. A copy of the CDE/CAA/SPI documentation must accompany the shipment

f. Reporting Defects. Any MRCs or components rejected when inspected IAW the procedures contained herein will be immediately reported to the address in paragraph 2d on page 3.

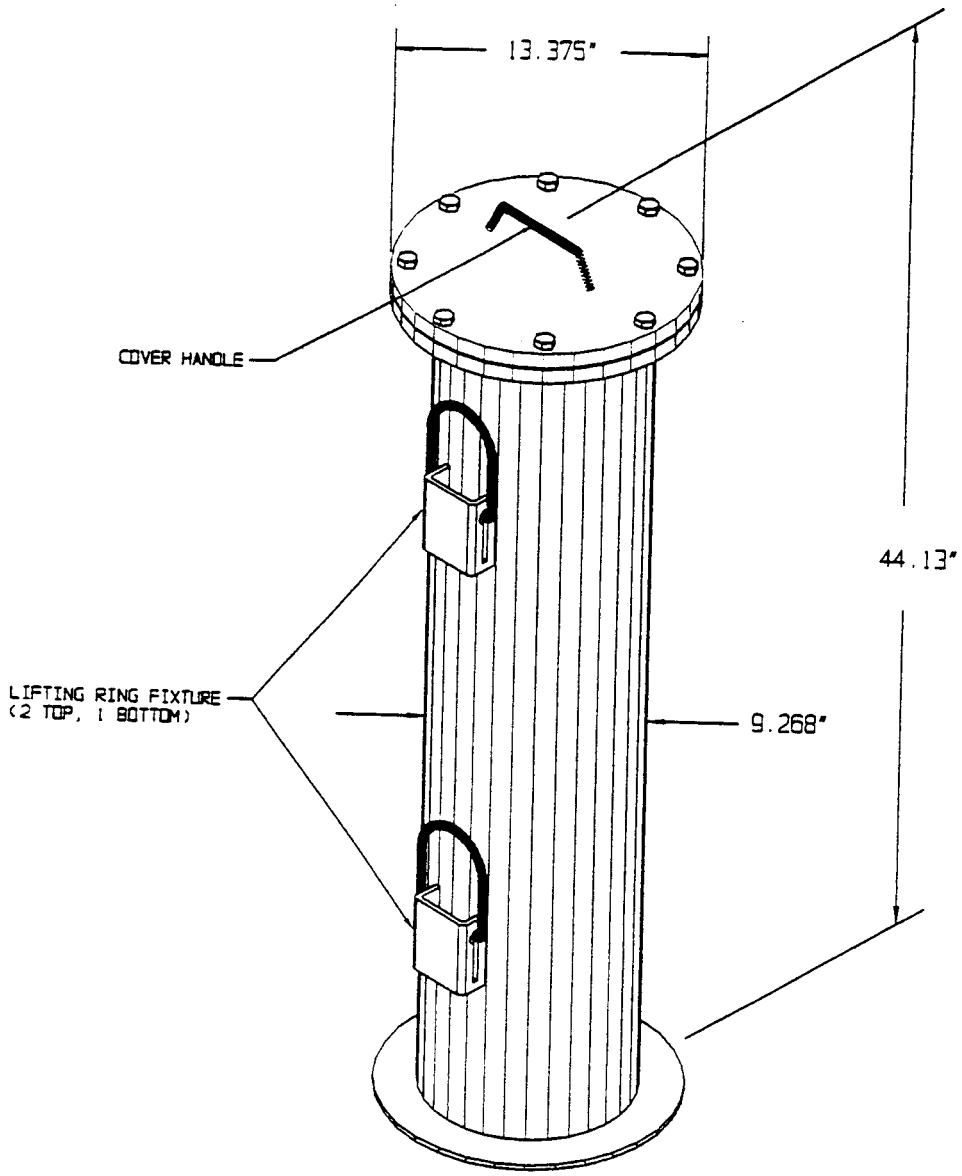

9-INCH X 41-INCH MULTIPLE ROUND CONTAINER (MRC)

DRAWING 19-48-4578/2

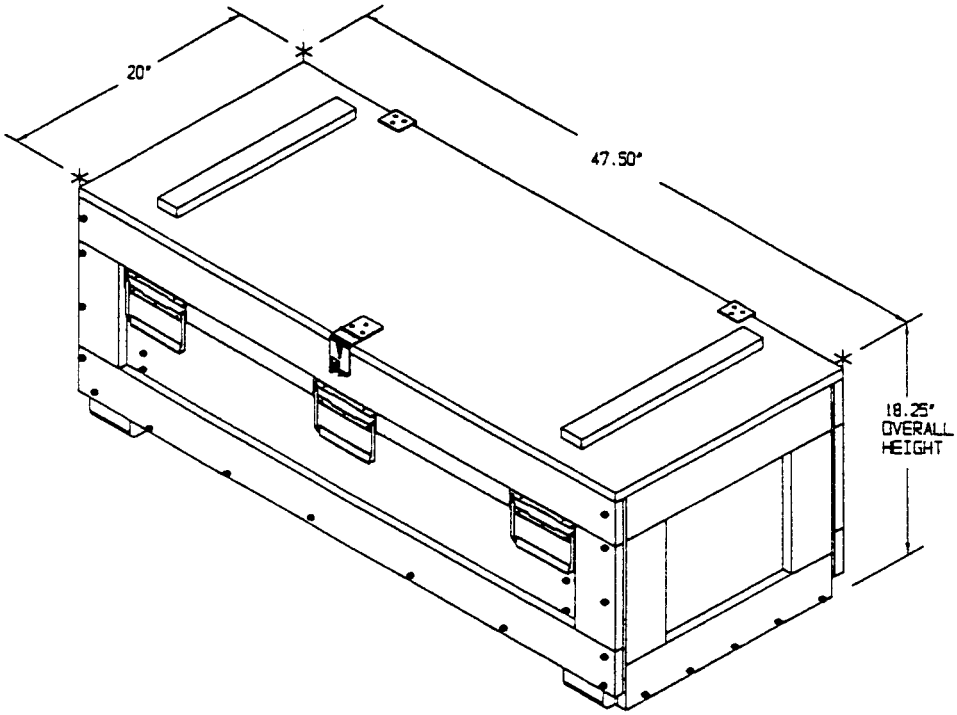

WOODEN OVERPACK CONTAINER FOR 9-INCH X 41-INCH MRC

DRAWING 19-48-4578/2

3. OPERATIONS:

a. Receive supply of MRCs and related components at the MRC preparation area.

SAFETY NOTE: OPERATORS WILL WEAR LEATHER PALM GLOVES, EYE/FACE PROTECTION AND APPROPRIATE FOOTWEAR WHEN CUTTING OR HANDLING STEEL BANDING.

b. Position the wooden overpack container on a level surface. If present, cut the strapping from the wooden overpack container and remove it to a disposal container along with any other non-reusable packaging materials.

c. Open the wooden overpack container and inspect for presence of required components. In addition to the MRC, the wooden overpack container should contain three plastic bags. One bag contains six each 1/2-inch bolts and eight lock washers. The second bag contains the butyl rubber o-ring. The third bag contains the plastic flange protector, fiberboard pads, wiping cloths and clear plastic liner bag. If all components are not present, close the box and return to receipt area for replacement of missing components and/or request another wooden overpack container with MRC be delivered to the MRC preparation area.

d. The MRC is equipped with 3 lifting fixtures and rings for removal from the wooden overpack container and then placing in a vertical position on a level surface for inspection. See page 8 for the proper positioning of the lifting fixture rings. All rings should be in the "Retracted position" (Fig 1) prior to use. CAUTION: DO NOT USE THE COVER HANDLE TO LIFT THE MRC.

(1) With an appropriate sling, remove the MRC from the wooden overpack container in a horizontal position using the top and bottom rings located on the same side of the MRC. Pull each ring out of the fixture as far as it will go, to the "Extended position" (Fig 2). Rotate the bottom ring outward to the "Extended-up position" (Fig 3). Rotate the top ring outward until it locks in the "Extended-back position" (Fig 4); it can't rotate any further. Attach sling, remove MRC and place on a level surface.

(2) Place MRC in a vertical position on a level surface for inspection using the 2 top rings located under the container flange as follows: Pull the unused ring out of the fixture as far as it will go, to the "Extended position" (Fig 2). Rotate both rings outward to the "Extended-up position" (Fig 3). Attach sling and place MRC in a vertical position on a level surface.

(3) Return all rings to the "Retracted position" by rotating then backward until extending straight outward as shown in Fig 5, then push downward as shown in Fig 6. Then rotate backwards into the "Extended position"(Fig 2)and finally push downward into fixture in the "Retracted position" (Fig 1).

e. Prepare and inspect the MRC and associated components as follows:

(1) Inspect MRC and wooden overpack container for in-transit damage and missing/broken parts; and mismatched component parts. Reject container exhibiting the following defects:

(a) Any visible damage to the cover or flange.

(b) Extensive damage that will critically change inside container dimensions.

(c) Punctured container body.

(d) Serially numbered components (body and cover) that do not coincide.

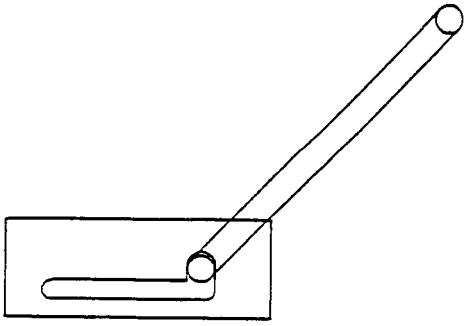

FIGURE 3
EXTENDED-UP POSITION

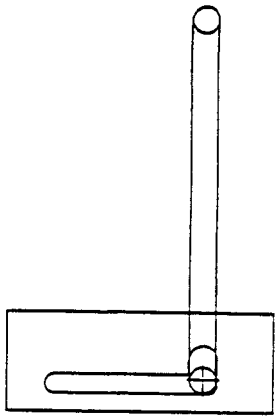

FIGURE 6

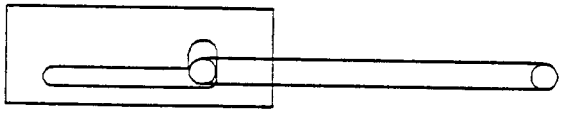

FIGURE 2
EXTENDED POSITION

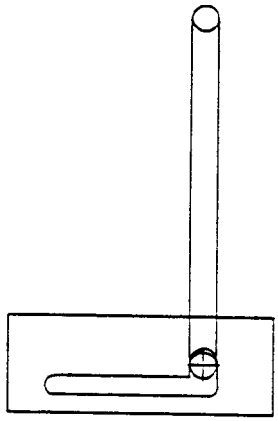

FIGURE 5

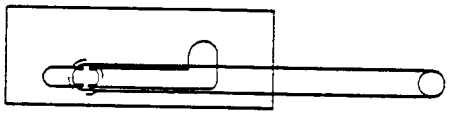

FIGURE 1
RETRACTED POSITION

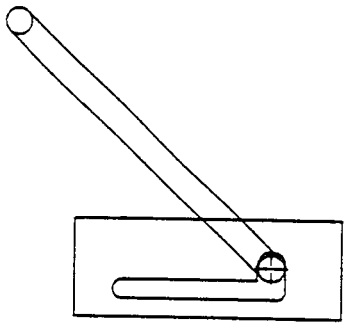

FIGURE 4
EXTENDED BACK POSITION

POSITIONING OF LIFTING FIXTURE RINGS

DRAWING 19-48-4578/2

(2) Remove the two bolts fastening the cover to the flange. Place the two bolts in the plastic bag containing the other 6 bolts. After removal of cover using the attached cover handle, visually inspect the machined cover surface. Reject for the following defects:

(a) Bent cover.

(b) Visible scratches extending across the area of seal contact on the cover which cannot be removed with the provided cleaning cloths. The critical area to ensure seal integrity is the area of seal contact with the cover. Mill finish marks are not cause for rejection.

(3) Remove the flange protector and cleaning cloths from the plastic bag. Place the cover in the plastic bag until needed.

(4) Next inspect the flange and container for the following defects. Reject for the following defects:

(a) Bent flange.

(b) Visible scratches extending across the bottom groove of the flange which cannot be removed with the provided cleaning cloths. The critical area to ensure seal integrity is the bottom of the flange groove. Mill finish marks are not cause for rejection

(5) Visually inspect the interior of the MRC for dirt or foreign material which may interfere with loading. Remove any extraneous material that may interfere with loading.

(6) Visually inspect flange and bolt threads for damage. Reject any MRC with damaged bolt hole threads in the flange, pending repair. Reject any bolt with damaged threads, pending replacement.

(a) Repair damaged bolt hole threads on flange by chasing the threads with a 1/2-inch UNF-20 thread tap, if available. If repair is unsuccessful or tap is not available, reject the MRC. Place the MRC back in the wooden overpack container, identify the unit as unusable by appropriate marking or tagging and prepare the unit for return to the appropriate repair or maintenance location. Report the rejected container IAW paragraph 2d on page 3.

(b) Reject bolts with damaged threads and obtain replacement bolt.

(7) Place the flange protector over the flange to protect the flange while loading the MRC. Place the 4-mil plastic bag in the container overlapping the flange and protector at the top. Tape bag to container body if necessary to hold in place.

(8) Remove the butyl rubber o-ring from its plastic bag. Note that the o-ring was cleaned and tested by the supplier prior to placing in the plastic bag. Inspect the o-ring for any foreign matter or for any permanent deformation that may have occurred during shipment. Remove any foreign matter with the clean, soft, dry cloth provided. Visually inspect o-ring surface to ensure all foreign matter has been removed. Water stains or discoloration on the o-ring are acceptable. Inspect for any cuts or abrasion of the o-ring surface. Reject any o-ring exhibiting permanent deformation, cuts or abrasions that are evident visually or by feel. Replace the o-ring in the plastic bag provided to protect it until needed.

f. Move MRC and components to the loading area.

NOTE: FOR ALL SUBSEQUENT OPERATIONS, OPERATORS WILL BE IN PROTECTIVE CLOTHING AS SPECIFIED IN THE APPLICABLE OPERATING PROCEDURES.

g. Receive the item to be containerized. Due to remote locations anticipated, handling will be IAW the applicable operating procedures. Chemical agent monitoring will be performed IAW the local Operating Procedures. The item may be received in a plastic bag.

h. Position the MRC to receive the item to be containerized. The MRC will normally be placed in a vertical position. Operators are not precluded from placing the MRC in a horizontal or slanted position if required for operational purposes. Position item for insertion into the container.

i. Test the item prior to insertion into the MRC with appropriate chemical agent monitoring equipment IAW the applicable operating procedures.

j. Lift the item being containerized straight up to clear the flange area of the awaiting MRC. Insert the item into the MRC. Insert any additional packing material required to fill the MRC and prevent movement of the item containerized.

k. Remove the flange protector. If the flange protector was exposed to agent, place it within the 4-mil bag and tie or tape the 4-mil plastic bag closed, making sure that the bag does not protrude above the flange surface. If the flange protector was not exposed to agent, set it aside for placement in the bag after removing the o-ring. Place the fiberboard pad(s) provided over the end of the plastic bag to ensure that no parts of the plastic bag are between the mating flange surfaces.

CAUTION: DO NOT USE COMPRESSED AIR TO CLEAN GROOVE IF ITEM WAS CONTAINERIZED AS A LEAKER.

l. After loading the MRC, inspect the flange for any foreign matter. Wipe entire flange surface including the o-ring groove with the clean, soft, lint free, dry cloth provided. Compressed air may be used if available to aid in the cleaning of the groove if the item is not a leaker. Water stains or discoloration on the metal flange which were caused during manufacture or transit are acceptable.

m. Remove the butyl rubber o-ring (PN ACV00511) from the plastic bag and reinspect for foreign material, distortions, cuts or any other noticeable imperfections. Place the o-ring in the o-ring groove of the machined flange.

CAUTION: Molded o-rings have a parting line seam where the two molds join during processing. Care must be taken during installation of the o-ring to ensure that the o-ring is not twisted or rolled and the parting line seam is installed parallel to the surface. Perform a second check by visually inspecting 100% of the exposed o-ring to ensure that the parting line is not visible.

n. Carefully remove the cover assembly from the plastic bag, wipe the cover with the lint-free cloth and place the cover assembly (ACV00512-1) on the MRC, machined surface to machined surface, aligning the bolt holes as cover is put in place using the attached cover handle. Rotate the lid to align the serial numbers of the cover and body as near as possible. Keep lateral and rotational movement of the cover assembly against the flange area and o-ring to a minimum.

o. Insert all bolts and lock washers into the closed cover/flange assembly finger tight.

NOTE: THE FOLLOWING THREE (3) STEPS ARE CRITICAL TO THE OPERATION AND WILL HAVE 100 PERCENT OVER-THE-SHOULDER QUALITY ASSURANCE INSPECTION. ANY DEVIATION/VARIATION FROM THIS PROCEDURE IS CAUSE FOR PROCESS REJECTION AND RE-CONTAINERIZATION.

P. Using the calibrated torque wrench that is set for 20 ft-lbs., tighten the bolts, ensuring that for any bolt tightened the next bolt to be tightened lies directly opposite (diametrically opposed). The second set of two bolts to tighten should be 90° to the first set of two bolts.

q. Using the calibrated torque wrench that is set for 40ft-lbs., tighten the bolts as before.

r. Using the calibrated torque wrench that is set for 60ft-lbs., tighten the bolts as before.

s. Perform low level monitoring in the vicinity of the MRC cover assembly/body flange to ensure that the MRC is effectively containing agent vapors.
Note: The container must be subject to low-level monitoring prior to transporting off of federal property.

(1) If the seal is unsatisfactory, torque the bolts again to 60 ft-lbs, verify the MRC cover is properly sealed and recheck.

(2) If a positive test is again received, loosen but do not remove bolts then retorque as stated in paragraphs (p-r) above.

(3) If a positive test is again received, remove the cover, remove the o-ring, with the provided o-ring remover and discard the o-ring. Clean the flange and cover surfaces with a lint free cloth. Install a new o-ring and repeat procedure starting with placement of cover assembly per instruction in paragraph 3n on page 10.

(4) If a positive test again is received, decontaminate the item per local SOP and repackage in another MRC.

(5) If monitoring is negative, continue with the next step.

t. Ensure markings on pre-marked MRC and wooden overpack container are consistent with the item loaded. Correct missing or erraneous markings prior to packing in the wooden overpack container. Additional markings are permissible if necessary to satisfy operational requirements or environmental regulations.

u. Return the MRC to the wooden overpack container. The wooden overpack container can be positioned either vertically or horizontally dependent upon operational preferences. Place the MRC in the overpack container making sure that the top of the MRC is oriented the same as the marked top of the overpack container. Position the top restraint and any other applicable packing material called out in the SPI. Close the wooden overpack container lid and secure latch. IAW the SPI attach a lead wire seal or other specified chain of custody device on the wooden overpack container latch.

v. Move the MRC out of the loading area to prepare for storage, disposal or transportation IAW with applicable operating procedures or site specific directions. Prior to transport or storage, secure two 3/4-inch metal bands around the box.

w. Collect all contaminated waste materials generated during the process IAW the local SOP. Stencil or mark waste containers with data concerning their contents as required by applicable regulations. Transfer waste containers and any other remaining supplies and equipment to storage, disposal or transport.

LETTER OF INSTRUCTION (LOI)
FOR
CONTAINERIZATION OF
RECOVERED CHEMICAL WARFARE MATERIEL
(211 POUNDS NET WEIGHT)
IN (12-INCH X 56-INCH)
MULTIPLE ROUND CONTAINER (MRC)

U.S. ARMY MATERIEL COMMAND DRAWING

AMSTA-AR-ESK	SFAE-CD-NM PM-NSCM	CHAIRMAN, CHEM-CNT-PAT AMSCB-SO	DRAFTSMAN	I. DEPPE	
			ENGINEER	M. DAEUMER	
			SUPPLY ENGINEERING DIVISION	TRANSPORTATION ENGINEERING DIVISION	VALIDATION ENGINEERING DIVISION
APPROVED BY ORDER OF COMMANDING GENERAL, U.S. ARMY MATERIEL COMMAND U.S. ARMY DEFENSE AMMUNITION CENTER			LOGISTICS ENGINEERING OFFICE MAY 1998		
			DRAWING NUMBER 19-48-4578/3		

PROJECT CB 96-97

TABLE OF CONTENTS

1.	INTRODUCTION	PAGE 3
2.	DESCRIPTION	PAGES 3 THRU 7
3.	OPERATIONS	PAGES 8 THRU 11

applicable, for the materiel to be shipped, to the top of the overpack container. The gross weight and item nomenclature and quantity should be applied to the front side of the wooden overpack container. Detailed marking instructions are contained in the SPI (AO) P 1365 ESK/MRC-2. A copy of the CDE/CAA/SPI documentation must accompany the shipment

f. Reporting Defects. Any MRCs or components rejected when inspected IAW the procedures contained herein will be immediately reported to the address in paragraph 2d on page 3.

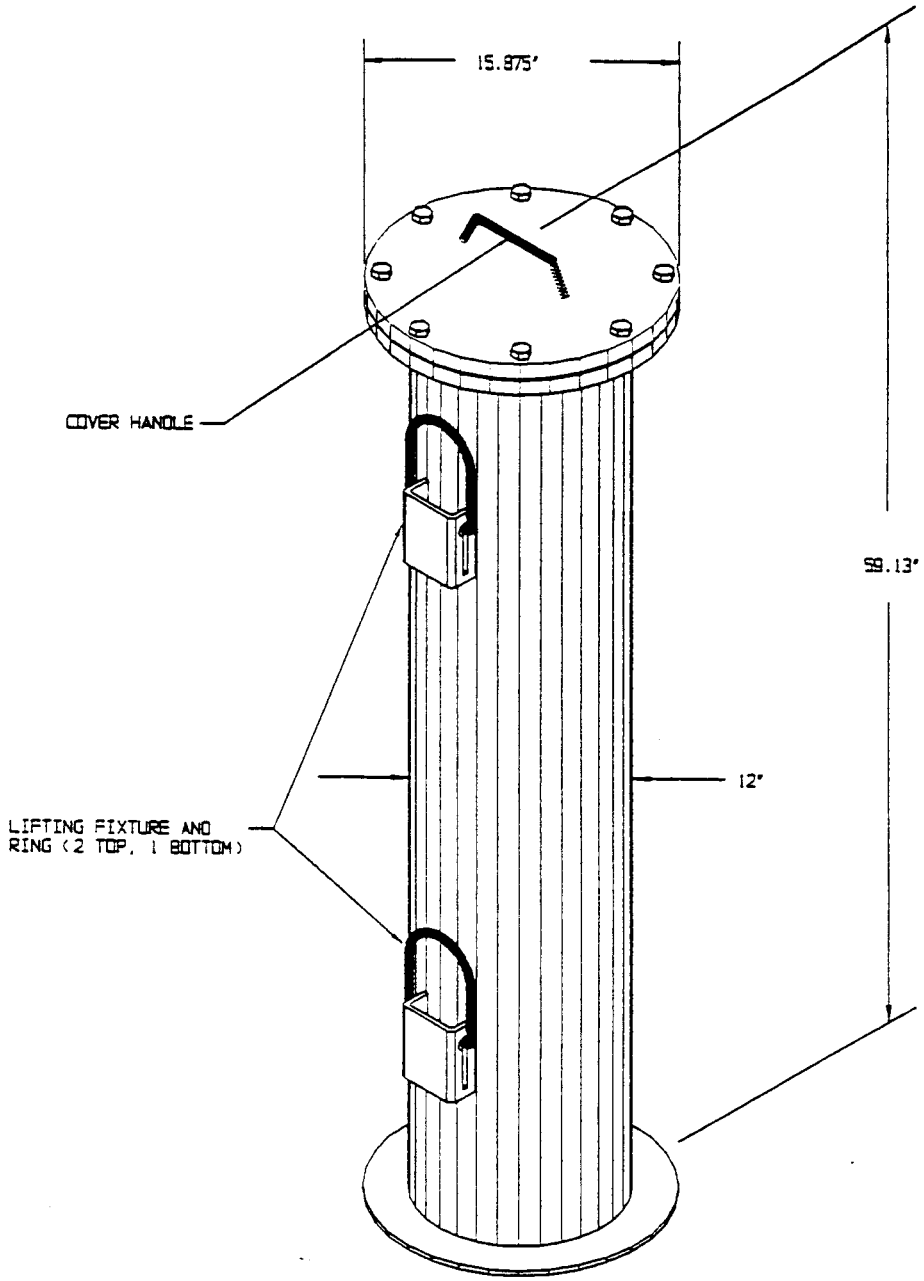

12-INCH X 56-INCH MULTIPLE ROUND CONTAINER (MRC)

DRAWING 19-48-4578/3

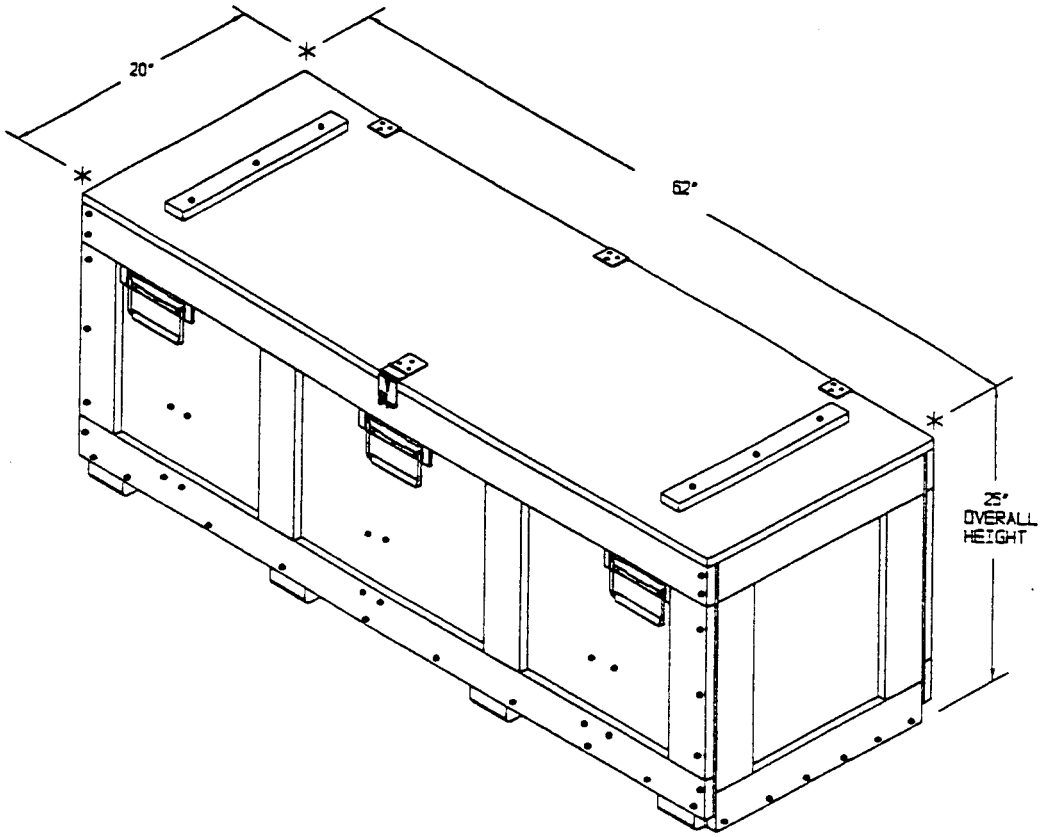

WOODEN OVERPACK CONTAINER FOR 12-INCH X 56-INCH MRC

DRAWING 19-48-4578/3

3. OPERATIONS:

a. Receive supply of MRCs and related components at the MRC preparation area.

SAFETY NOTE: OPERATORS WILL WEAR LEATHER PALM GLOVES, EYE/FACE PROTECTION AND APPROPRIATE FOOTWEAR WHEN CUTTING OR HANDLING STEEL BANDING.

b. Position the wooden overpack container on a level surface. If present, cut the strapping from the wooden overpack container and remove it to a disposal container along with any other non-reusable packaging materials.

c. Open the wooden overpack container and inspect for presence of required components. In addition to the MRC, the wooden overpack container should contain three plastic bags. One bag contains six each 1/2-inch bolts and eight lock washers. The second bag contains the butyl rubber o-ring. The third bag contains the plastic flange protector, fiberboard pads, wiping cloths and clear plastic liner bag. If all components are not present, close the box and return to receipt area for replacement of missing components and/or request another wooden overpack container with MRC be delivered to the MRC preparation area.

d. The MRC is equipped with 3 lifting fixtures and rings for removal from the wooden overpack container and then placing in a vertical position on a level surface for inspection. See page 8 for the proper positioning of the lifting fixture rings. All rings should be in the "Retracted position" (Fig 1) prior to use. CAUTION: DO NOT USE COVER HANDLE TO LIFT MRC.

(1) With an appropriate sling, remove the MRC from the wooden overpack container in a horizontal position using the top and bottom rings located on the same side of the MRC. Pull each ring out of the fixture as far as it will go, to the "Extended position" (Fig 2). Rotate the bottom ring outward to the "Extended-up position" (Fig 3). Rotate the top ring outward until it locks, i.e., won't rotate any further, to the "Extended-back position" (Fig 4). Attach sling, remove MRC and place on a level surface.

(2) Place MRC in a vertical position on a level surface for inspection using the 2 top rings located under the flange. Pull the unused ring out of the fixture as far as it will go, to the "Extended position" (Fig 2). Rotate both rings outward to the "Extended-up position (Fig 3). Attach sling and place MRC in a vertical position on a level surface.

(3) Return all rings to the "Retracted position" by rotating them backward until extending straight outward as shown in Fig 5, then push downward as shown in Fig 6. Then rotate backwards into the "Extended position" (Fig 2) and finally push downward into fixture in the "Retracted position" (Fig 1).

e. Prepare and inspect the MRC and associated components as follows:

(1) Inspect MRC and wooden overpack container for in-transit damage and missing/broken parts, and mismatched component parts. Reject container exhibiting the following defects:

(a) Any visible damage to the cover or flange.

(b) Extensive damage that will critically change inside container dimensions.

(c) Punctured container body.

(d) Serially numbered components (body and cover) that do not coincide.

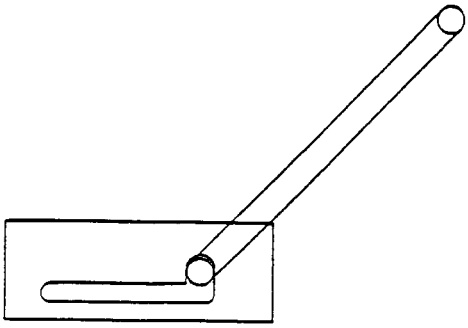

FIGURE 3
EXTENDED-UP POSITION

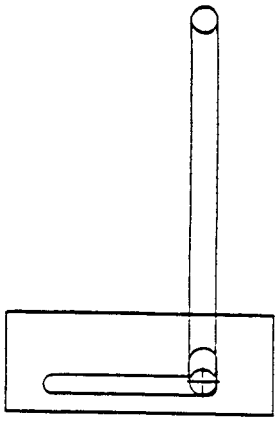

FIGURE 6

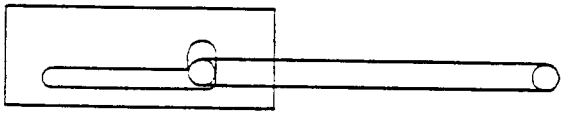

FIGURE 2
EXTENDED POSITION

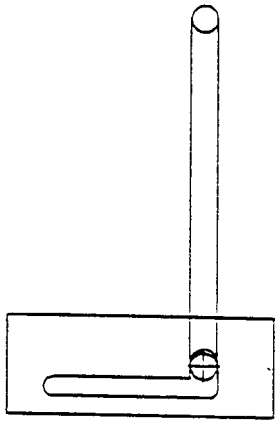

FIGURE 5

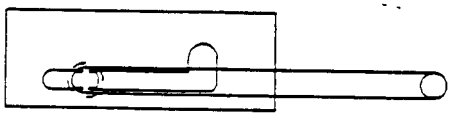

FIGURE 1
RETRACTED POSITION

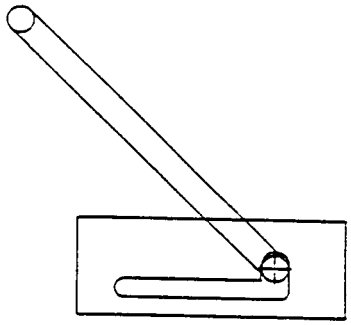

FIGURE 4
EXTENDED BACK POSITION

POSITIONING OF LIFTING FIXTURE RINGS

DRAWING 19-48-4578/3

(2) Remove the two bolts fastening the cover to the flange. Place the two bolts in the plastic bag containing the other 6 bolts. After removal of cover, using the attached cover handle, visually inspect the machined cover surface. Reject for the following defects:

(a) Bent cover.

(b) Visible scratches extending across the area of seal contact on the cover which cannot be removed with the provided cleaning cloths. The critical area to ensure seal integrity is the area of seal contact with the cover. Mill finish marks are not cause for rejection.

(3) Remove the flange protector and cleaning cloths from the plastic bag. Place the cover in the plastic bag until needed.

(4) Next inspect the flange and container for the following defects. Reject for the following defects:

(a) Bent flange.

(b) Visible scratches extending across the bottom groove of the flange which cannot be removed with the provided cleaning cloths. The critical area to ensure seal integrity is the bottom of the flange groove. Mill finish marks are not cause for rejection

(5) Visually inspect the interior of the MRC for dirt or foreign material which may interfere with loading. Remove any extraneous material that may interfere with loading.

(6) Visually inspect flange and bolt threads for damage. Reject any MRC with damaged bolt hole threads in the flange, pending repair. Reject any bolt with damaged threads, pending replacement.

(a) Repair damaged bolt hole threads on flange by chasing the threads with a 1/2-inch UNF-20 thread tap, if available. If repair is unsuccessful or tap is not available, reject the MRC. Place the MRC back in the wooden overpack container, identify the unit as unusable by appropriate marking or tagging and prepare the unit for return to the appropriate repair or maintenance location. Report the rejected container IAW paragraph 2d on page 3.

(b) Reject bolts with damaged threads and obtain replacement bolt.

(7) Place the flange protector over the flange to protect the flange while loading the MRC. Place the 4-mil plastic bag in the container overlapping the flange and protector at the top. Tape bag to container body if necessary to hold in place.

(8) Remove the butyl rubber o-ring from its plastic bag. Note that the o-ring was cleaned and tested by the supplier prior to placing in the plastic bag. Inspect the o-ring for any foreign matter or for any permanent deformation that may have occurred during shipment. Remove any foreign matter with the clean, soft, dry cloth provided. Visually inspect o-ring surface to ensure all foreign matter has been removed. Water stains or discoloration on the o-ring are acceptable. Inspect for any cuts or abrasion of the o-ring surface. Reject any o-ring exhibiting permanent deformation, cuts or abrasions that are evident visually or by feel. Replace the o-ring in the plastic bag provided to protect it until needed.

f. Move MRC and components to the loading area.

NOTE: FOR ALL SUBSEQUENT OPERATIONS, OPERATORS WILL BE IN PROTECTIVE CLOTHING AS SPECIFIED IN THE APPLICABLE OPERATING PROCEDURES.

g. Receive the item to be containerized. Due to remote locations anticipated, handling will be IAW the applicable operating procedures. Chemical agent monitoring will be performed IAW the local Operating Procedures. The item may be received in a plastic bag.

h. Position the MRC to receive the item to be containerized. The MRC will normally be placed in a vertical position. Operators are not precluded from placing the MRC in a horizontal or slanted position if required for operational purposes. Position item for insertion into the container.

i. Test the item prior to insertion into the MRC with appropriate chemical agent monitoring equipment IAW the applicable operating procedures.

j. Lift the item being containerized straight up to clear the flange area of the awaiting MRC. Insert the item into the MRC. Insert any additional packing material required to fill the MRC and prevent movement of the item containerized.

k. Remove the flange protector. If the flange protector was exposed to agent, place it within the 4-mil bag and tie or tape the 4-mil plastic bag closed, making sure that the bag does not protrude above the flange surface. If the flange protector was not exposed to agent, set it aside for placement in the bag after removing the o-ring. Place the fiberboard pad(s) provided over the end of the plastic bag to ensure that no parts of the plastic bag are between the mating flange surfaces.

CAUTION: DO NOT USE COMPRESSED AIR TO CLEAN GROOVE IF ITEM WAS CONTAINERIZED AS A LEAKER.

l. After loading the MRC, inspect the flange for any foreign matter. Wipe entire flange surface including the o-ring groove with the clean, soft, lint free, dry cloth provided. Compressed air may be used if available to aid in the cleaning of the groove if the item is not a leaker. Water stains or discoloration on the metal flange which were caused during manufacture or transit are acceptable.

m. Remove the butyl rubber o-ring (PN ACV00570) from the plastic bag and reinspect for foreign material, distortions, cuts or any other noticeable imperfections. Place the o-ring in the o-ring groove of the machined flange.

CAUTION: Molded o-rings have a parting line seam where the two molds join during processing. Care must be taken during installation of the o-ring to ensure that the o-ring is not twisted or rolled and the parting line seam is installed parallel to the surface. Perform a second check by visually inspecting 100% of the exposed o-ring to ensure that the parting line is not visible.

n. Carefully remove the cover assembly from the plastic bag, wipe the cover with the lint-free cloth and place the cover assembly (ACV00571-1) on the MRC, machined surface to machined surface, aligning the bolt holes as cover is put in place using the attached cover handle. Rotate the lid to align the serial numbers of the cover and body as near as possible. Keep lateral and rotational movement of the cover assembly against the flange area and o-ring to a minimum.

o,. Insert all bolts and lock washers into the closed cover/flange assembly finger tight.

NOTE: THE FOLLOWING THREE (3) STEPS ARE CRITICAL TO THE OPERATION AND WILL HAVE 100 PERCENT OVER-THE-SHOULDER QUALITY ASSURANCE INSPECTION. ANY DEVIATION/VARIATION FROM THIS PROCEDURE IS CAUSE FOR PROCESS REJECTION AND RE-CONTAINERIZATION.

p. Using the calibrated torque wrench that is set for 20 ft-lbs., tighten the bolts, ensuring that for any bolt tightened the next bolt to be tightened lies directly opposite (diametrically opposed). The second set of two bolts to tighten should be 90° to the first set of two bolts.

q. Using the calibrated torque wrench that is set for 40ft-lbs.,tighten the bolts as before.

r. Using the calibrated torque wrench that is set for 60ft-lbs., tighten the bolts as before.

s. Perform low level monitoring in the vicinity of the MRC cover assembly/body flange to ensure that the MRC is effectively containing agent vapors. NOTE: The container must be subjected to low-level monitoring prior to transporting off of federal property..

(1) If the seal is unsatisfactory, torque the bolts again to 60 ft-lbs, verify the MRC cover is properly sealed and recheck.

(2) If a positive test is again received loosen but do not remove bolts then re-torque as stated in paragraphs (p-r) above.

(3) If a positive test is again received, remove the cover, remove the o-ring, with the provided o-ring remover and discard the o-ring. Clean the flange and cover surfaces with a lint free cloth. Install a new o-ring and repeat procedure starting with placement of cover assembly per instruction in paragraph 3m on page 10.

(4) If a positive test again is received, decontaminate the item per local SOP and repackage in another MRC.

(5) If monitoring is negative, continue with the next step.

t. Ensure markings on pre-marked MRC and wooden overpack container are consistent with the item loaded. Correct missing or erroneous markings prior to packing in the wooden overpack container. Additional markings are permissible if necessary to satisfy operational requirements or environmental regulations.

u. Return the MRC to the wooden overpack container. The wooden overpack container can be positioned either vertically or horizontally dependent upon operational preferences. Place the MRC in the overpack container making sure that the top of the MRC is oriented the same as the marked top of the overpack container. Position the top restraint and any other applicable packing material called out in the SPI. Close the wooden overpack container lid and secure latch. IAW the SPI attach a lead wire seal or other specified chain of custody device on the wooden overpack container latch.

v. Move the MRC out of the loading area to prepare for storage, disposal or transportation IAW with applicable operating procedures or site specific directions. Prior to transport or storage, secure two 3/4-inch metal bands around the box.

w. Collect all contaminated waste materials generated during the process IAW the local SOP. Stencil or mark waste containers with data concerning their contents as required by applicable regulations. Transfer waste containers and any other remaining supplies and equipment to storage, disposal or transport.

PROTECTIVE ACTION PLAN

FOR

SAFETY SUBMISSION FOR INTRUSIVE INVESTIGATIONS
AT SUSPECT CHEMICAL WARFARE MATERIEL SITES
FORT MCCLELLAN, ALABAMA

PREPARED BY:

U.S. ARMY CORPS OF ENGINEERS,
MOBILE DISTRICT

PROTECTIVE ACTION PLAN

FOR

SAFETY SUBMISSION FOR INTRUSIVE INVESTIGATIONS
AT SUSPECT CHEMICAL WARFARE MATERIEL SITES
FORT MCCLELLAN, ALABAMA

TABLE OF CONTENTS

1 INTRODUCTION

2 KEY AGENCY RESPONSIBILITIES

3 DEFINITION OF TERMS

4 TECHNICAL OVERVIEW

5 PROTECTIVE ACTIONS AND PROCEDURES

6 EMERGENCY PROCEDURES

7 KEY CONTACT PERSONNEL

APPENDIX A RESPONSE FLOW CHART

APPENDIX B CHEMICAL EVENT REPORT

1 INTRODUCTION.

The Purpose of the Protective Action Plan is to inform Anniston, Alabama area residents of public health and safety protective actions to be taken during intrusive investigations at suspect chemical warfare materiel (CWM) sites at Fort McClellan, AL.

The Protective Action Plan is part of the Safety Submission for intrusive investigations at suspect CWM Sites at Fort McClellan, AL. The Safety Submission includes the Site Specific Work Plan, Site Safety and Health Plan, Interim Holding Facility Plan, Transportation Plan and other plans that address all aspects of operations to ensure, that the utmost safety for workers, the public, and the environment is maintained.

The Safety Submission will be approved by Department of Defense Explosive Safety Board (DDESB) prior to starting any intrusive work onsite. Applicable parts of the Safety Submission are referenced throughout this Protective Action Plan.

A meeting will be held prior to the start of operations by representatives of key supporting agencies to address any questions or concerns regarding the proposed operations. The U.S. Army Corps of Engineers, Mobile District will continue to provide information to the surrounding communities on significant activities throughout the duration of operations in accordance, with the Community Relations Plan.

2 KEY AGENCY RESPONSIBILITIES.

2.1 Agency Responsibilities.

2.1.1 U.S. Army Corps of Engineers, Mobile District (CESAM):

CESAM as the life-cycle project manager, is in charge of the overall operation at Fort McClellan, AL and responsible for all planning, policy implementation, project execution, and the coordination of the support agencies and contractors. CESAM will make management decisions based on recommendations from U.S. Army Engineering and Support Center at Huntsville, U.S. Army Project Manger for Non-stockpile Chemical Materiel, US Army Technical Escort Unit, and Edgewood Chemical Biological Center. CESAM will also be responsible for the following:

- Coordination of work efforts of the various support agencies.
- Providing information to the public in accordance with the Community Relations Plan for Fort McClellan, AL.
- Providing for the safety of all personnel supporting operations as well as the local community in conjunction with, U.S. Army Engineering and Support Center at Huntsville, U.S. Army Technical Escort Unit and Edgewood Chemical Biological Center.

- Designation of a Protective Action Plan Point of Contact (POC). The Protective Action Plan POC will field questions concerning the Protective Action Plan and coordinate provisions of the Memoranda of Agreements (See Appendix F of Volume II).

- Coordinating the medical training for medical support personnel for the treatment of CWM casualties

- Conducting table top exercises and participating as the geographic district in the pre-operational survey
- Public Affairs Officer (PAO) will ensure that information regarding a chemical event and site emergencies is provided to the surrounding community

2.1.2 U.S. Army Engineering and Support Center at Huntsville (CEHNC).

CEHNC is the ordnance and explosives center of expertise for the planning and execution of all operations in support of intrusive investigation activities at suspect CWM sites at Fort McClellan. CEHNC will:

- Provide safety oversight during intrusive investigations
- Prepare and submit a Chemical Event Report to the Army Operations Center (with input from TEU)
- Provide CESAM PAO with information concerning a chemical event and emergency response effort so they can provide it to the surrounding community

- Provide contractor and oversight for CWM hazard containment and abatement during intrusive investigations.

In the event that chemical agents are detected above action levels, CEHNC's contractor will:

- Ensure that procedures addressed in the applicable sections of the SSHP are initiated
- Initiate notifications in accordance with the Response Flow Chart in Appendix A, as necessary
-

2.1.3 U.S. Army Program Manager for Chemical Demilitarization (PMCD).

PMCD is responsible for the destruction of all United States chemical warfare materiels.

2.1.4 U.S. Army Project Manger for Non-Stock Pile Chemical Materiel (PM NSCM).

PM NSCM is responsible for destroying non-stockpile chemical materiel and for arranging the interim storage and off-site transportation of chemical warfare materiel recovered at Fort McClellan. If necessary, recovered chemical warfare materiel may be stored in an interim storage facility and transported off site by U.S. Army Technical Escort Unit in accordance with the Interim Holding Facility Plan, and Transportation Plan.

2.1.5 U.S. Army Soldiers and Biological and Chemical Command (SBCCOM)

SBCCOM provides medical officer consultation for medical support issues, and provide training to medical response personnel on the treatment of chemical warfare materiel exposure.

2.1.6 U.S. Army Technical Escort Unit (TEU)

TEU is a specialized unit of SBCCOM and provides the Department of Defense with a worldwide capability of responding to, neutralizing, and disposing of the chemical agent, munitions, and other hazardous materiel. Additionally, TEU will escort these items while in transit to safe storage or disposal areas.

TEU is responsible for CWM hazard containment and abatement.

If a chemical agent alarm "ring off" occurs while air monitoring is being conducted, if a chemical munition is identified, or if an unknown object or materiel is encountered, TEU will assume control of the area and execute containment, abatement, and/or recovery operations.

TEU is responsible for transporting recovered CWM that remains in original configuration. TEU will also respond to an emergency occurring during on-site transport or storage of recovered CWM in an Interim Holding Facility. In the event of an emergency, TEU will recommend a course of action to CESAM.

2.1.7 Edgewood Chemical Biological Center (ECBC)

ECBC will be responsible for the area, perimeter, and personnel monitoring conducted during intrusive investigations at suspect CWM sites.

2.1.8 Not Used

2.1.9 Not Used

2.1.10 Local Police, Fire Department and Ambulance Service.

The local police, fire department and ambulance service will be trained in accordance with DA Pam 50-6 and will remain on stand-by duty off-site during intrusive investigations at suspect CWM sites at Fort McClellan.

In the unlikely event that police, fire or ambulance response is required at the site, said response will be in accordance with the Memoranda of Agreement (Appendix A) between the Anniston Fire Department, the Anniston Police Department, the Anniston Emergency Rescue Squad and CESAM.

2.1.11 Medical Emergency.

There will be two emergency medical technicians with advance life support certification and one ambulance on-site during intrusive investigations at suspect CWM sites. In the event of a medical emergency the on-site emergency medical technician will determine if off site transport is required by air or ground to Northeast Alabama Regional Medical Center.

3 DEFINITION OF TERMS

3.1 Maximum Credible Event (MCE).

The most serious public safety hazard scenario that is reasonably possible as the result of an accidental occurrence during intrusive investigations of suspect CWM sites at Fort McClellan. Site specific information concerning the MCE is presented in Table 5.1.

3.2 No Significant Effects (NOSE) Distance.

The distance beyond which the public would not experience any adverse health effects in association with a chemical release. Site specific information concerning the NOSE is presented in Table 5.1.

3.3 Pre-Operational Survey.

A formal review and assessment of an operation that has the potential for CWM exposure. For additional information see section 5.11.

3.4 Chemical Accident/Incident (CAI).

CAI are chemical events involving chemical agent materiel.

a. Chemical Accident. A chemical event resulting from non-deliberate acts where safety is of primary concern.

b. Chemical Incident. A chemical event resulting from deliberate acts (terrorism or criminal) where security is of concern.

3.5 Chemical Warfare Materiel (CWM)

CWM is defined as an item configured as a munition containing a chemical substance that is intended to kill, seriously injure or incapacitate a person through its physiological effects. The term CWM also includes V-and G series nerve agent, H-and HN-series, blister agent, and lewisite in other-than-munition configuration. Due to their hazards, prevalence and military-unique application, chemical agent identification sets (CAIS) are also considered CWM. CWM does not include: riot control agents; chemical herbicides; smoke and flame producing items; or soil, water, debris or other media contaminated with chemical agent.

3.6 Table Top Exercise

Exercises to evaluate emergency plans and procedures and to resolve questions of coordination and assignment of responsibility. Participants will include agencies with emergency management responsibilities.

3.7 Exclusion Zone

Operational safety zone of a work area with access limited to essential personnel.

3.8 Ring Off

The indication, through chemical agent monitoring systems, of the confirmed presence of a chemical agent at a level above its airborne exposure limit.

3.9 Intrusive Work

An activity that involves or results in the penetration of the ground surface at an area known or suspected to contain non-stockpile CWM.

4 TECHNICAL OVERVIEW.

4.1 Historical Background.

Fort McClellan is located in Calhoun County, Alabama. It includes three main bodies of Government-owned land in the foothills of the Appalachian Mountains:

- The Main Post, consisting of approximately 18,929 acres, adjoins Anniston, Alabama, and extends six miles to the northeast towards Jacksonville,

Alabama, in the valley of the Choccolocco Mountains. Approximately 12,000 acres of the Main Post are characterized by undeveloped mountains.

- To the east, the Choccolocco Corridor (consisting of approximately 4,488 acres leased from the State of Alabama) connects Fort McClellan with the Talladega National Forest. Within the National Forest, approximately 100,000 acres of woodlands are accessible for training in the event of national emergency or with the approval of the U.S. Department of Agriculture-Forest Service. The Choccolocco Corridor lease will not be renewed and the land will remain with the State of Alabama.

- Pelham Range, consisting of approximately 22,245 acres, is located approximately eight miles due west of Fort McClellan's Main Post cantonment area. Pelham Range is used for maneuvers, firing ranges and field training. The entire Pelham Range will remain as Army property, but will be licensed by the U.S. Army to the Alabama National Guard.

Fort McClellan has been used for artillery training of troops and the National Guard as early as 1912. In 1941, Fort McClellan became the site for the Chemical Corps Training Command. In 1962, the U.S. Army Combat Developments Command Chemical Biological-Radiological Agency moved to Fort McClellan. In 1973, the Chemical Corps School along with the Chemical Biological-Radiological Agency closed. In 1979, the U.S. Army Chemical Corps School was re-established along with a training brigade for basic training.

Presently, the Department of Army is reducing its force structure in response to changing global security requirements. As the size of the Army is reduced, fewer installations are needed and activities are being relocated and consolidated at installations that will ultimately provide maximum capability to project and sustain military combat power in support of national military objectives.

Recommendations of the 1995 Defense Base Closure and Realignment Commission made in conformance with the provisions of the Defense Base Closure and Realignment Act of 1990, Public Law 101-510, as amended, require the closure of Fort McClellan except for land and facilities required for a Reserve Component enclave, and minimum essential facilities as required to provide auxiliary support to the chemical demilitarization operation at Anniston Army Depot, Alabama.

The primary action of the Army is the clean up and disposal of excess property at Fort McClellan resulting from the decision to close.

4.2 Contaminants of Concern.

Site specific information containing contaminants of concern is presented in Table 5.1. The toxicological effects of the contaminants of concern are described in the Site Safety and Health Plan.

4.3 Additional Information.

Additional information regarding the details of the operation can be found in the Safety Submission and by contacting the CESAM Public Affairs Office (Section 7).

5· PROTECTIVE ACTIONS AND PROCEDURES.

To ensure safety of the public and all personnel supporting the intrusive investigation of suspect CWM sites at Fort McClellan, the following Protective Actions and Procedures will be taken.

5.1 Maximum Credible Event (MCE).

CEHNC will determine the MCE for operations. The magnitude of the potential hazards depends upon the type and quantity of CWM, uncovered and the meteorological conditions. Based upon the MCE, a computer model is used to predict the no significant effects distance radius from the point of soil penetration. This computer model considers such things as the types of chemical or high explosive hazards most likely too be encountered, meteorological data, any measures taken to mitigate the threat at the source, and the nature of the work.

5.2 Implementation of a Site Safety and Health Plan.

The Site Safety and Health Plan addresses the safety and health concerns of all work to be conducted during operations and includes an activity hazard analysis for all site tasks and operations. The Site Safety and Health Plan contains specific requirements for employees' training, personnel protective equipment, engineering controls, medical surveillance, air monitoring, meteorological monitoring, site control, decontamination, and emergency response.

5.3 Air Monitoring.

An extensive air monitoring program will be conducted or overseen by ECBC during intrusive investigations at suspect CWM sites. Real-time air monitoring utilizing direct reading instruments, solid sorbent and colormetric tubes, will be conducted downwind and at the source during all intrusive investigations. Details of the air monitoring are described in the Site Safety and Health Plan, ECBC Monitoring Plan, and the Interim Holding Facility Plan. Details include monitoring equipment for each containment or hazard to be monitored, activities and locations to be monitored and specific actions to be taken should a positive monitoring result or ring-off occur. ECBC will also be responsible for monitoring industrial chemicals.

5.4 No Significant Effects Distance (NOSE) Modeling

A MCE and "worse case" NOSE has been determined for each site at McClellan. The MCE was based on the item(s) at each site that produced the greatest NOSE. All of the information was taken from historical records and information gathered for the archive search report. During the intrusive investigation the general public will not be permitted to enter the NOSE while intrusive work is being performed. On a daily basis or when meteorological conditions change, the NOSE will be calculated onsite with the D2PC program. If the current meteorological conditions create a NOSE larger than the original NOSE for the site and this impacts public areas, intrusive operations will cease. Intrusive operations will not begin until the NOSE has been reduced to its original area or the plans have been re-evaluated and public safety secure

.5.5 Emergency Response Contingency Plan.

U.S. Army Technical Escort Unit (TEU) will be responsible for initiating the Emergency Response Contingency Plan for CWM stored in the Interim Holding Facility. Transport to the Interim Holding Facility will be conducted along a non-public access road.

5.6 Interim Holding Facility (IHF).

TEU will containerize recovered CWM removed during intrusive investigations on suspect CWM sites using single round containers as overpack.

TEU will escort and transport the recovered CWM to the IHF.

The IHF will be designed according to requirements set forth in the IHF Plan. Materials stored in the IHF will be considered hazardous waste and/or suspect CWM and therefore, must be treated as such.

5.7 Generator Hazardous Waste Manifest.

The manifest will be completed and serves as an inventory of items held in the IHF.

As generator of the manifest, CESAM will review and sign the manifest, using information provided by CEHNC's contractor and TEU prior to admission of containerized recovered CWM to the IHF, and other material (soil, scrap metal) to the staging area.

Hazardous waste manifests will be maintained at the site until shipment occurs at which time the manifest will be supplied to the waste transporter.

5.8 Transportation and Disposal.

The intent is to remove the recovered CWM from the IHF in a timely and efficient manner as weather and other factors permit to minimize risk to workers and public from a safety standpoint.

Transportation of MRC's on and off-site will be conducted by TEU in accordance with the Transportation and IHF plans submitted by the PM NSCM.

Soil or scrap/debris which has detectable chemical agent contamination above the AEL will be decontaminated on-site using approved methods. The decontaminated material will then be drummed and transported offsite to an approved hazardous waste facility.

Soil and scrap/debris which has detectable or suspect chemical agent contamination which is below the AEL will be drummed and transported to an approved hazardous waste facility.

Scrap/debris which is not suspect of chemical agent contamination will be recycled or transported to an approved solid waste facility.

5.9 Storage Monitoring.

During storage of recovered CWM in the IHF, duplicate weekly air samples will be taken for potential release of air-borne contaminants. Air sampling methods and locations are outlined in the IHF plan.

5.10 Security.

Security will be provided at the IHF when single round containers are stored inside. Security will be provided in accordance with the IHF Plan submitted by the PM NSCM.

5.11 Training.

5.11.1 Medical Training for the Treatment of CWM Casualties

Training for emergency medical technicians and medical personnel will be coordinated by CESAM through U.S. Army Soldiers Biological and Chemical Command (SBCCOM). Fire and police personnel and other non-medical personal are not required to receive medical training but will receive information on chemicals of concern suspect at McClellan and may request training. Training will occur prior to commencement of intrusive investigations at suspect CWM sites.

5.11.2 Pre-Operational Survey

A Pre-Operational survey is a formal review and assessment of a operation that has the potential for chemical agent exposure. It assures that all provisions of the Site Plan, Safety Submission and Army Regulations are complied with and operator proficiency is demonstrated. Procedures include:

- Review of Pertinent Documents
- Inspection of Equipment and Facilities
- Verify Employee Training and Procedures
- Witness Selected Systems Testing and Operations

Team Members may include:

- Department of the Army Safety
- Army Technical Center for Explosive Safety
- Project Manger for Non-stockpile Chemical Materiel
- Edgewood Chemical Biological Center
- U.S. Army Technical Escort Unit
- Headquarters U.S. Army Corps of Engineers
- U.S. Army Engineering and Support Center at Huntsville
- U.S. Army Corps of Engineers, Mobile District

On-site medical support personnel are to participate in the Pre-Operational Survey

5.11.3 Table Top Exercise

The purpose of the Table Top Exercise is to evaluate emergency plans and procedures and to resolve questions of coordination and assignment of responsibility. Participants include Agencies with emergency Management responsibility. The Table Top exercise will take place in a meeting room and will include discussions of various simulated emergency situations in a non-threatening format. Local emergency response personnel will attend.

6 EMERGENCY PROCEDURES.

6.1 Ordnance Remedial Investigation.

Ordnance remedial investigation work is to be conducted by TEU. Incidents involving a positive identification of chemical warfare agent dispersal (i.e. a "ring-off" confirmed by ECBC) will initiate procedures addressed in the applicable sections of the Protective

Action Plan. In the event of an emergency condition (e.g. ring-off of monitoring equipment, chemical warfare agent release, spill), TEU will:

- Assume responsibility of the exclusion zone;
- Evaluate the on-site conditions, and;
- Determine the required course of action, including whether evacuation of the site is warranted.

CESAM will make a decision to continue with, or suspend operations based upon the recommendations of TEU.

If off-site EMT, fire or police response is required, the response will be provided for in accordance with the Memoranda of Agreement between CESAM, Anniston Fire Department, Anniston Police Department, Anniston Emergency Rescue Squad and Northeast Alabama Regional Medical Center.

Information detailing the nature of the chemical event and local emergency response actions taken will be provided to the surrounding community in accordance with the Community Relations Plan.

In the case of an emergency involving exposure of a site worker to CWM, the casualty will be;

- Transported to the decontamination line;
- Decontaminated; and
- Provided with the necessary emergency medical treatment.
- Transported using either Air or over the road ambulance service as directed by the on-site EMT. The ambulance service will provide treatment and transportation of casualties.

Emergency medical technicians and hospital staff will have received medical training for treating CWM casualties through a contract held by the Program Manger for Chemical Demilitarization in diagnosis and treatment of chemical warfare agent casualties.

Ambulance and hospital medical treatment will be provided on an as needed basis in accordance with the MOA between CESAM, Anniston Emergency Rescue Squad and Northeast Alabama Regional Medical Center.

6.2 Emergency Preparedness Drills.

Prior to the start of intrusive investigations at suspect CWM sites at Fort McClellan, all emergency response personnel will be given the opportunity to participate in a Table Top Exercise and Pre-Operational Survey as outlined in sections 5.11.2 and 5.11.3.

The Table Top Exercise and Pre-Operational Survey will be coordinated by CESAM in preparation for an Operational Survey conducted by U.S. Army Corps of Engineers Headquarters Safety Office.

The Table Top Exercise and Pre-Operational Survey will be scheduled at Fort McClellan prior to intrusive investigations at suspect CWM sites and will include several emergency scenarios for the operations.

7 KEY CONTACT PERSONNEL.

Personnel. The following personnel are designated as key contact personnel for the Protective Action Plan:

John A Whiting (334) 694-4216
POC for Protective Action Plan,
U.S. Army Corps of Engineers,
Mobile District

Safety Specialist
U.S. Army Engineering and Support Center at Huntsville
Attn: Safety Office (USAESCH)

E. Patrick Robbins (334) 690-2505
Chief, Public Affairs Office
U.S. Army Corps of Engineers
Mobile District

TABLE 5.1
CONTAMINANTS OF CONCERN, AND MAXIMUM CREDIBLE EVENTS (MCEs), AND NO SIGNIFICANT EFFECTS DISTANCES FOR SUSPECT CWM SITES FORT McCLELLAN

Site Number/Name	Contaminants(s) of Concern	Remarks	MCE & NOSE
Training Area 31 (AOC-1)	GB/HD/decontaminants (STB, DS-2 and DANC)	Samples (20-40 ml of agent) were used to contaminate objects used for training. In 1992 field samples were analyzed for chemical agents and breakdown products - negative results.	40 ml of GB NOSE = 11M/15M/99M
Area T-38, Reservoir Ridge	GB, VX, HD/decontaminants (STB, DS-2 and DANC)	Sampling has been performed for chemical agents and breakdown products-negative results. Sampling in 1992 was negative for chemical agents and breakdown products at 4 locations.	Pit areas – 40 ml GB NOSE+11M/15M/99M 5 gal HD evap release in suspect drum burial site NOSE=10M/14M/160M
Smoke Ranges R&S (AOC-3)	OE and smoke oils		NA for Smoke Range—No MCE/NOSE
T-4 Biological Warfare Area	Possible HD contaminated soils and decontaminants (STB, DS-2 and DANC)	Possibility of and historic mustard spill at this site. Previous surface sampling was negative.	7.1 oz of globulized HD-exposed during sampling. NOSE-14M

TABLE 5.1 (continued)
CONTAMINANTS OF CONCERN, AND MAXIMUM CREDIBLE EVENTS (MCEs), AND NO SIGNIFICANT EFFECTS DISTANCES FOR SUSPECT CWM SITES
FORT McCLELLAN

Site Number/Name	Contaminants(s) of Concern	Remarks	MCE & NOSE
Agent ID Area (AOC-6)	GB, VX, HD, L, decontaminants (STB, DS-2 and DANC), if ID sets were used, then Phosgene may be present.	Exact use is unknown	40 ml CG-due to ID sets being used NOSE=16M/18M/132M
Cane Creek Training Area (AOC-8)	Suspect burial pit, decontaminants (STB, DS-2 and DANC), HD	Sampling was done for chemical agents and breakdown products-negative results. In 1992, surface water and sediment samples were taken – negative results.	40 ml HD NOSE=7M
Naylor Field (AOC-9), T-6	HD (40 ml at a time) and decontaminants (STB,DS-2 and DANC) were used at site. EBS states DANC, possible Lewisite, MR stimulant	Sampling was conducted for agents and for breakdown products – negative results.	40 ml HD NOSE=7M
Blacktop Training Area (AOC-10/11)	Possibly any chemical agent and decontaminants (STB, DS-2 and DANC)		40 ml HD, sampling around perimeter of blacktop NOSE=7M

TABLE 5.1 (continued)
CONTAMINANTS OF CONCERN, AND MAXIMUM CREDIBLE EVENTS (MCEs), AND NO SIGNIFICANT EFFECTS DISTANCES FOR SUSPECT CWM SITES
FORT McCLELLAN

Site Number/Name	Contaminants(s) of Concern	Remarks	MCE & NOSE
Dog Training Area (AOC-12)	All		Concrete samples, extraction 40 ml of HD, NOSE=7M
Old Burn Pit (AOC-16)	Unknown	Site was found during Archive Search Report (ASR) site visit.	40 ml HD NOSE=7M
Field Personnel Decontamination (AOC-17)	Unknown, Decontaminants STB, DS-2 and DANC		40 ml HD in sump area along with copious amounts of STB NOSE=7M
Old Toxic Training Area	HD, decontaminants (STB, DS-2 and DANC)	Training exercises or detecting and deconning HD. Sampling was done for agent and by products (surface) – negative results (1992).	40 ml of HD for samples NOSE=7M
Mustard Spill Sites	Possible HD		7.1 oz of globulized HD – exposed during sampling. NOSE=14M

TABLE 5.1 (continued)
CONTAMINANTS OF CONCERN, AND MAXIMUM CREDIBLE EVENTS (MCEs), AND NO SIGNIFICANT EFFECTS DISTANCES FOR SUSPECT CWM SITES
FORT McCLELLAN

Site Number/Name	Contaminants(s) of Concern	Remarks	MCE & NOSE
Area T-24A, FTMC-33 1.5 acres	CG, BZ, GB, and HD and decontaminants (STB, DS-2 and DANC) Lots of Fog Oil used in this area EBS	EOD training area, 2 burning pits, possible 6 feet depth, limited sampling was done with neg results, Weston	155 HD, not explosively configured NOSE=4M/5M/71M 155 CG, not explosively configured NOSE=166M/186M/1675M 155 GB, not explosively configured NOSE=82M/110M/711M 4.2" CG, not explosively configured NOSE=156M/173M/1254M 4.2" GB, not explosively configured NOSE=2M/4M/52M

Notes:
Maximum Credible Event = MCE:A possible, maximum release of contamination that could be expected, but not necessarily a worst possible case.
NOSE: The distance from the MCE at which no significant health effects are expected.

1. The amount of 40 ml of agent was selected because of the archival data that mentions the use of "up to this amount" in the training areas. For the agent detection areas, this amount is mentioned frequently as the maximum amount used at each test station.
2. The amount of 5 gal of agent in a drum is the result of calculations by TEU as to how much agent would evaporate between the time the drum was located and the time it was overpacked, for the purposes of this site we will use 60 minutes evaporation time.
3. Meteorological conditions used will be: WS=1MPS, Temp=DF85, Phosgene will be an instantaneous release, mustard will be an evaporative release over a 60 minute time frame, GRA will be the surface used, Anniston will be the geographical location used.
4. The last number in the string of numbers in the NOSE, underlined, is the NOSE, the first number is the 1%, the second number is the No Deaths, the last number is the No Significant Effects distance, all in meters. If there is only one number and it is underlined, that is the NOSE.

FORT MCCLELLAN

EMERGENCY RESPONSE

FLOW CHART (NON-MEDICAL)

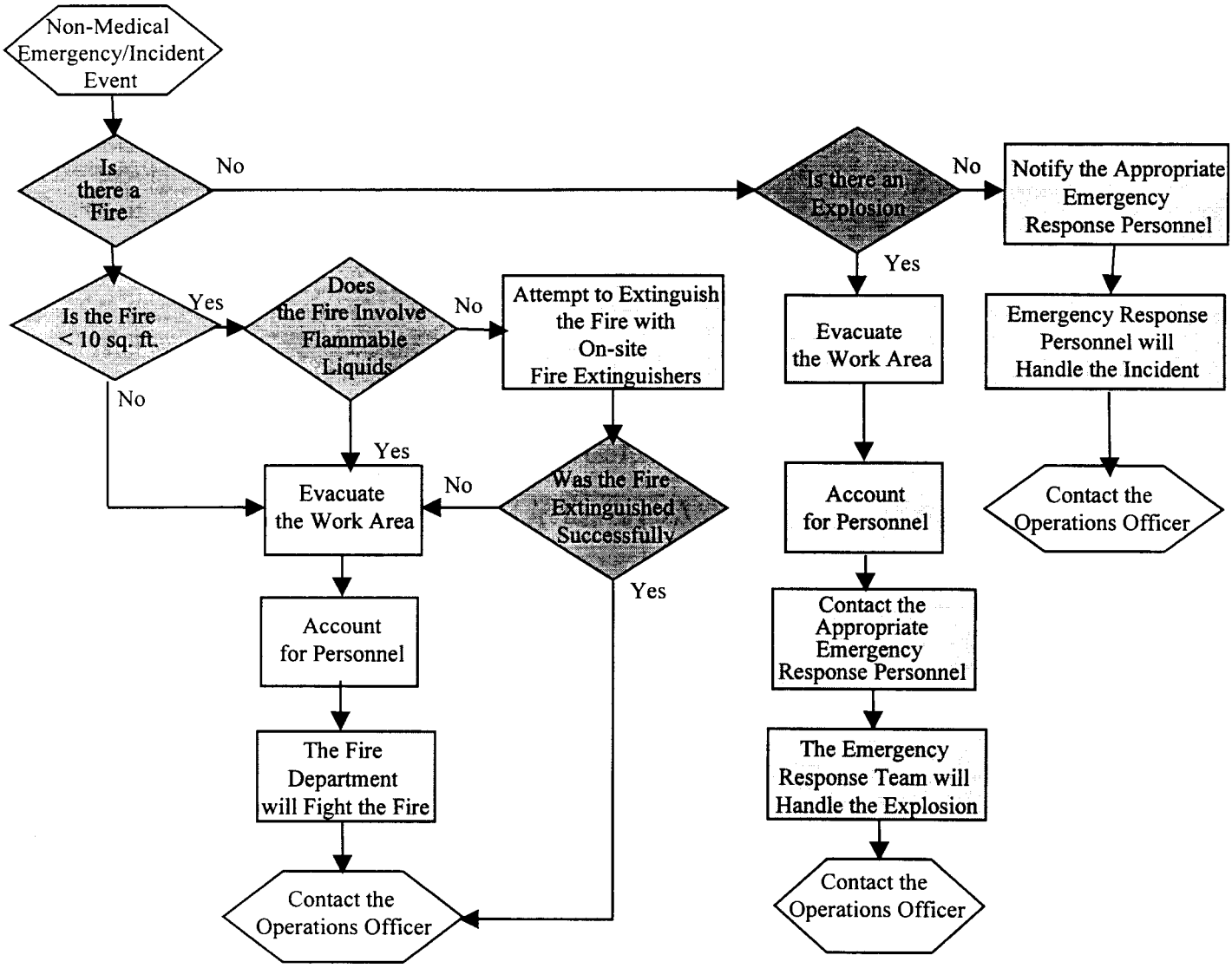

FORT MCCLELLAN

EMERGENCY RESPONSE FLOW CHART (MEDICAL)

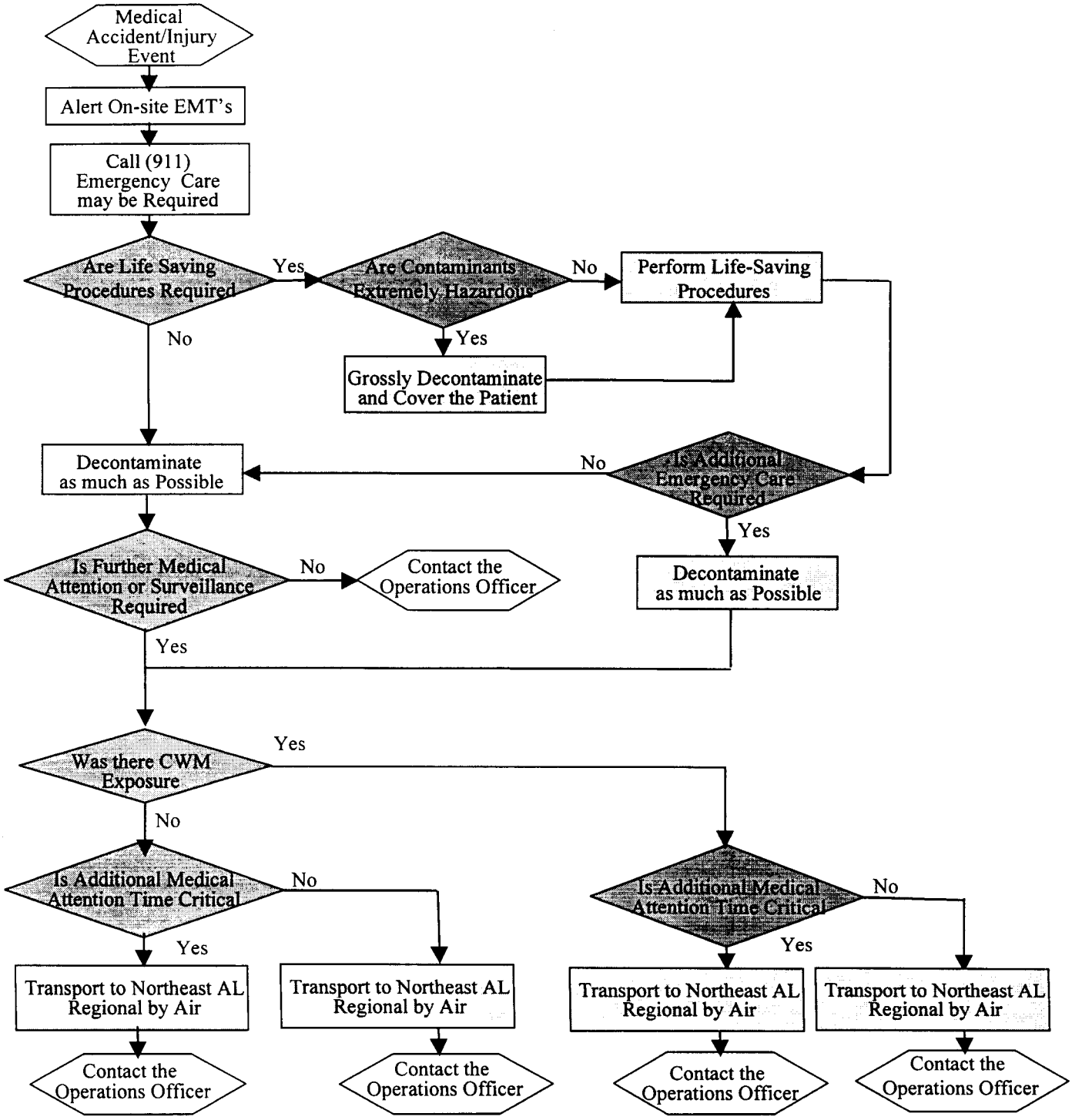

Submit to AOC (Army Operations Center)
Telephone number (703) 697-0218 Fax number (703) 695-5156

CHEMICAL EVENT REPORT FORMAT
(Classify Report as per AR 380-86)

Reader: "This is a Chemical Event Report, RCS: CGSGPO-453"

1. Date/Time group of the event (local).

2. Location.

3. Quantity and type of munition(s) or container (s) and chemical agent involved.

4. Description of what has happened. (Include statement of whether chemical event is a result of non-deliberate or deliberate action. If not applicable, so state)

5. Emergency notification level (i.e., non-surety, limited area, post only, or community emergency.)

6. Description of property damage.

7. Personnel casualties and/or injuries.

8. Whether off post medical services and/or facilities were required.

9. State if SRF commander is required.

10. Assistance required (i.e., augmentation forces of any type, EOD, security forces, equipment, materials.)

11. Any other pertinent information (i.e., news releases, safety, security measures taken.)

12. Commander's assessment of the situation.

13. In reporting emergency disposal of hazardous munitions (i.e., suspected chemical munitions or materials), reporting agencies must add the following:

    a. Type and amount of explosives used to destroy each munition.

    b. Type and amount of explosive used to destroy each munition.