APPENDIX G
AIR MONITORING PLAN FOR INDUSTRIAL CHEMICALS (PARSONS ES) AND CHEMICAL AGENTS (ECBC)

APPENDIX G
AIR MONITORING PLAN FOR INDUSTRIAL CHEMICALS (PARSONS ES) AND CHEMICAL AGENTS (ECBC)

INTRODUCTION

There are two separate groups of chemicals (i.e., chemical agents and industrial chemicals or aromatic/chlorinated solvents) which are potentially present at the Fort McClellan sites. During activities that disturb the surface, the air at these sites will be monitored to identify any changes in existing conditions. Observation will be used to identify unusual conditions such as visible vapors and discolored liquids and solids. Air monitoring will be used to identify and quantify airborne concentrations of the following potential contaminants:

- Chemical Agents - mustard, Lewisite, and breakdown products;
- Ionizable volatile and semi-volatile organic vapors; and
- Particulate matter.

AIR MONITORING RESPONSIBILITIES

There are two different organizations (i.e., Parsons ES and ECBC) which will be responsible for monitoring industrial chemicals and chemical agents at the Fort McClellan sites. Plans and procedures for this monitoring is included in the documents attached to this Appendix as described below.

Industrial Chemicals/Particulates

Parsons ES personnel will perform on-site air monitoring for particulate matter and industrial chemicals. Monitoring procedures for these potential contaminants are provided in Appendix G-1 -- "Parsons ES Monitoring of Industrial Chemicals and Particulates." Monitoring for these potential airborne contaminants is described in the following paragraphs.

- Particulate Matter. A real-time aerosol monitor (Mini-ram) will be used to monitor airborne particulate in the contamination reduction zone. These measurements are needed to ensure that dust and other particulate matter are not being generated/released from site activities in excessive quantities.
- Photoionization Detector (PID). A 11.7 eV PID will be used to monitor total organic contaminants present in the air at Fort McClellan sites. Readings will be used to determine if respiratory protection must be worn by personnel working in the CRZ. PID monitoring will be performed in personnel breathing zones during site operations and upwind/downwind within the CRZ.
- Draeger Detector Tubes. Detector tubes for benzene and trichloroethylene will be used to qualitatively analyze whether PID readings are the result of aromatic or chlorinated contaminants.

Recovered Chemical Warfare Material (RCWM).

ECBC will provide air monitoring of recovered chemical warfare material (RCWM) at Fort McClellan sites. A copy of the plan and the plan appendices prepared by ECBC for this monitoring is included as Appendix G-2 to this appendix (i.e., ECBC "Monitoring Plan for Fort McClellan, Alabama"). The air monitoring equipment and methods in this plan includes the following:

- MINICAMS for near real-time (NRT) monitoring of RCWM;
- Depot Area Air Monitoring System (DAAMS) and Real Time Analytical Platform (RTAP) for low-level detection of RCWM; and
- Fenceline Open-path Fourier Transform Infrared Spectrometry (FTIR) for the detection of RCWM above the airborne exposure limits (AELs) along the entire path of the FTIR - as an adjunct to MINICAMS.

SPECIFICS OF AIR MONITORING

Details and specifics of air sampling/monitoring, calibration requirements, and the recording and reporting are discussed separately in Appendix G-1, Industrial Chemicals/Particulates, and Attachments A and B; and Appendix G-2, RCWM.

ATTACHMENT A
STANDARD OPERATING PROCEDURE FOR
HNu® OPERATION

ATTACHMENT A
STANDARD OPERATING PROCEDURE FOR
HNu® OPERATION

1.0 PURPOSE

The purpose of this procedure is to provide a description of, and technical guidance on, the screening method to measure the sum of all photoionizable hydrocarbons.

2.0 SCOPE

This procedure provides a description of the principles of operation, instrumentation and calibration for the operation of a HNu® photoionization detector (PID).

3.0 REQUIREMENTS

This Standard Operating Procedure (SOP) will be used as a screening method to measure the sum of all photoionizable hydrocarbons at Fort McClellan sites. The methods described in the SOP will be followed unless field conditions dictate changes. The SSHO can approve minor changes to the SOP, while major changes in the SOP will require approval of the PHSO.

4.0 REFERENCES

HNU® Photoionization Analyzer Instruction Manual, HNU® Systems, Inc.

5.0 DEFINITIONS

SSHP - Site Safety and Health Plan.

6.0 EQUIPMENT

HNu® Potable Photoionization Analyzer with a 11.7 eV lamp.

7.0 OPERATION

7.1 Working Linear Range

According to the manufacturer's literature, the working linear range is 0.1 to 2,000 ppm isobutylene equivalent.

7.2 Detection Limit

According to the manufacturer's literature, the detection limit is 0.1 ppm isobutylene equivalent.

7.3 Sample Matrix

The sample matrix is ambient air.

7.4 Theory

A PID (Figure A.1) is a portable instrument used to detect, measure, and provide a direct reading of the concentration of a variety of trace gases in many industrial or plant atmospheres based on the principle of photoionizaiton. This photoionizaiton process involves the absorption of ultraviolet light by a gas molecule leading to ionization as follows:

$$RH + hv \text{ --> } + + e-$$

in which:

RH = Trace gas, and

hv = Photon with an energy level equal to or greater than the ionization potential of RH.

The sensor consists of a sealed ultraviolet (UV) light source that emits photons with an energy level high enough to ionize many trace species, particularly organics, but not high enough to ionize the major components of air, O_2, N_2, CO, CO_2, CH_4, or H_2O.

A chamber exposed to the light source contains a pair of electrodes, one a bias electrode, and the second a collector electrode. When a positive potential is applied to the bias electrode, a field is created in the chamber. Ions formed by the absorption of photons are driven to the collector electrode. The current produced is then measured and the corresponding concentration displayed on a meter directly in parts per million (ppm).

To minimize absorption or decomposition of sample gases, a rapid flow of sample gas is maintained through the ion chamber, which is small, made of inert material and located at the sampling point.

7.5 Application

The analyzer consists of a probe, a readout assembly, and a battery charger. The probe contains the sensing and amplifying circuitry; the readout assembly contains the meter, controls, power supply and rechargeable battery. The analyzer will operate from the battery for 6 hours or continuously when connected to the battery charger.

PIDs are nonspecific detectors which will sense all photionizable hydrocarbons whose ionization potential is below the energy contained in a photon of the ultraviolet light. It is used only to provide instantaneous indication that an air release has occurred and to trigger work practices and monitoring modifications.

7.6 Interferences and Corrective Actions

Dust or other foreign matter may be drawn into the probe reducing sensitivity or producing erratic readings. A good preventive maintenance program will minimize this problem.

7.7 Safety Precautions

Some portable PIDs do not carry an intrinsic safety rating. These instruments should not be used in combustible atmospheres.

The PID is a nondestructive analyzer; calibrations using toxic or hazardous gases must be done in a hood. Isobutylene (the preferred calibration gas) is used as the calibration gas because it is not toxic or hazardous.

7.8 Routine Preventive Maintenance

The battery pack will power the instrument for 6 hours. If the instrument is operated for longer, a spare, charged battery pack will be carried. Batteries must be charged daily.

Other maintenance of the PID consists of cleaning the lamp and ion chamber and replacement of the lamp or other component parts or subassemblies. These components should be inspected quarterly, or more often if experience shows a greater frequency is necessary. The preventive maintenance schedule is shown in Table A.2.

8.0 REAGENTS AND CALIBRATION STANDARDS

8.1 Reagents

The portable PID will be calibrated using a certified isobutylene standard gas cylinder. No reagents are used.

8.2 Calibration Standards

Standard - A calibration gas cylinder containing 100 ppm isobutylene.

8.3 Usage

Generally, a gas cylinder should not be used below 200-300 psi as pressure effects could cause concentration variations. The cylinder should not be used past the recommended age of the contents as indicated by the manufacturer. In case of difficulty, verify the contents and concentration of the gas cylinder.

9.0 Instrument Calibration and Maintenance

All air monitoring and testing equipment will be routinely calibrated and maintained. All instruments will be calibrated at least once per day unless otherwise stated. Maintenance will be addressed on an as-needed basis, with cleaning being done daily.

The calibration and maintenance of the equipment will be documented in the field notebook. The following is a list of items to be included in (but not limited to) the documentation:

- Date, time, and signature of individual performing task.
- Type of equipment, manufacturer, serial number, lot number.
- Nature of task.

- For calibration standards: type, concentration, lot number, manufacturer, expiration date.
- During calibration, record initial reading, adjustments made, and final reading.

NOTE: Air Monitoring forms (to include forms for calibration) are included in Appendix C.

During use, the instrument will be monitored for unusual readings. If an erratic reading is observed, the instrument will be checked with a calibration standard, and, if necessary, it will be recalibrated. Recalibration may also be necessary if there has been an extreme temperature change since the initial calibration that day.

9.1 HNu® Photoionizaiton Detector

The procedure for calibration of an HNu® photoionization detector is described below.

1. Attach the probe to the readout unit. Match the alignment key, then twist the connector clockwise until a distinct locking is felt.
2. Turn the FUNCTION switch to the battery check position. Check to ensure that the indicator reads within or beyond the green battery arc on the scale. If the indicator is below the green arc, or if the red LED came on, the battery must be charged prior to calibrating or using the instrument.
3. To zero the instrument, turn the FUNCTION switch to the STANDBY position, and rotate the ZERO POTENTIOMETER until the meter reads zero. Wait 15 to 20 seconds to ensure that the zero adjustment is stable. If it is not stable, readjust.
4. Set the FUNCTION switch to the desired ppm range.
5. Listen for the fan operation to verify fan function.
6. Connect one end of the sampling hose to the regulator outlet and the other end to the sampling probe of the HNu®.
7. Open the regulator valve (to calibration gas).
8. Take reading after 5 to 10 seconds.
9. Adjust the span control setting as required to read the ppm concentration of the standard.
10. Results of calibration and adjustments made should be recorded in the log book.

9.2 Calibration Schedule

The calibration schedule is shown in Table A.3.

10.0 ANALYTICAL MEASUREMENT

Turn the instrument on by pressing the front of the power switch. Each sampling location will be measured for five consecutive 1-minute intervals. The approximate average concentration observed during each 1-minute interval will be recorded on the Air Monitoring

Log (Figure A.1) and the 5-minute mathematical average concentration is calculated. If the average downwind concentration exceeds the average upwind concentration by greater than 1 ppm for 30 minutes, then actions will be taken to assess and control the source of emissions.

11.0 DATA TREATMENT

The PID automatically converts the probe signal to a concentration (Reported "as Isobutylene") by multiplying the instrument response by the response factor calculated during the most recent calibration.

12.0 DATA DELIVERABLES

Data generated from the routine portable monitoring using the PID will be recorded on the data form shown on Figure A.1.

13.0 QC REQUIREMENTS

The control limits are specified in Table A.1, which will be verified prior to start up of the monitor program. The frequency of QC Samples is listed in Table A.3. At the end of each period, the calibrating gas will be analyzed as though it were a sample and the reading recorded as post survey span check. The data will be recorded on the Air Monitoring Log (Figure A.1).

Page _____ of _____ Date: _____ _____ _____
Yr. Mo. Day

FIGURE A.1
AIR MONITORING LOG

PID _____ MINIRAM _____

Start Time _____

Location _____ Sampler _____

First 5 one-min readings Start Time _____ Sample Location _____

Temp _____ Wind Speed _____ Dir _____

PID _____ _____ _____ _____ _____ Average _____

MINIRAM _____ _____ _____ _____ _____ Average _____

Second 5 one-min readings Start Time _____ Sample Location _____

Temp _____ Wind Speed _____ Dir _____

PID _____ _____ _____ _____ _____ Average _____

MINIRAM _____ _____ _____ _____ _____ Average _____

Third 5 one-min readings Start Time _____ Sample Location _____

Temp _____ Wind Speed _____ Dir _____

PID _____ _____ _____ _____ _____ Average _____

MINIRAM _____ _____ _____ _____ _____ Average _____

Fourth 5 one-min readings Start Time _____ Sample Location _____

Temp _____ Wind Speed _____ Dir _____

PID _____ _____ _____ _____ _____ Average _____

MINIRAM _____ _____ _____ _____ _____ Average _____

Page _____ of _____ Date: _____ _____ _____
Yr. Mo. Day

FIGURE A.1 -- CONTINUED
AIR MONITORING LOG

Continuing 5 one-min readings Start Time _____ Sample Location _____
Temp _____ Wind Speed _____ Dir _____
PID _____ _____ _____ _____ _____ Average _____
MINIRAM _____ _____ _____ _____ _____ Average _____

Continuing 5 one-min readings Start Time _____ Sample Location _____
Temp _____ Wind Speed _____ Dir _____
PID _____ _____ _____ _____ _____ Average _____
MINIRAM _____ _____ _____ _____ _____ Average _____

Continuing 5 one-min readings Start Time _____ Sample Location _____
Temp _____ Wind Speed _____ Dir _____
PID _____ _____ _____ _____ _____ Average _____
MINIRAM _____ _____ _____ _____ _____ Average _____

Continuing 5 one-min readings Start Time _____ Sample Location _____
Temp _____ Wind Speed _____ Dir _____
PID _____ _____ _____ _____ _____ Average _____
MINIRAM _____ _____ _____ _____ _____ Average _____

Table A.1
Target Control Limits

QC Parameter	Control Limit
Completeness	90%
Precision	±20%
Accuracy	±20%
Detection Limit	0.1 ppm (as isobutylene)

Table A.2
Preventive Maintenance Schedule

Task	Frequency
Charge Batteries	Daily
Inspect Lamp, Ion Chamber	Daily
Clean Lamp, Ion Chamber	Quarterly

Table A.3
Calibration Schedule and QC Frequency

Type of Calibration	Frequency
Zero/Span Check	Each time instrument is turned on (minimum of twice per day)

FINAL

ATTACHMENT B
STANDARD OPERATING PROCEDURE FOR MINIRAM OPERATION

ATTACHMENT B
STANDARD OPERATING PROCEDURE FOR MINIRAM OPERATION

1.0 PURPOSE

The purpose of this procedure is to provide a general description of, and technical guidance on, the use of a MINIRAM: a portable screening technique for the determination of airborne particulate matter.

2.0 SCOPE

This procedure provides a description of the principles of operation, instrumentation and calibration of a MINIRAM airborne particulate monitor.

3.0 REQUIREMENTS

This Standard Operating Procedure (SOP) will be used as a portable screening technique for the determination of airborne particulate matter. The MINIRAM will provide a real-time airborne concentration of particulates. The methods described in the SOP will be followed unless field conditions dictate changes. The SSHO can approve minor changes to the SOP, while major changes in the SOP will require approval of the Project HSO.

4.0 REFERENCES

MINIRAM Operations Manual, MIE, Inc., 4/87.

5.0 DEFINITIONS

5.1 MINIRAM

A Miniature Real-Time Aerosol Monitor manufactured by MIE, Inc., to provide real-time airborne concentrations of particulates.

5.2 SSHP

Site Safety and Health Plan.

6.0 EQUIPMENT

- MINIRAM

7.0 OPERATION STANDARDS

7.1 Working Linear Range

According to the manufacturer's literature, the working linear range is 0.01 to 10 mg/m^3 of particulate matter.

7.2 Detection Limit

According to the manufacturers literature, the detection limit (Table B.1) is 0.01 mg/m^3.

7.3 Sample Matrix

The sample matrix is ambient air.

7.4 Application

The MINIRAM (for Miniature Real-time Aerosol Monitor) Model PDM-3 is an airborne particulate monitor whose operating principle is based on the detection of scattered electromagnetic radiation in the near infrared. The MINIRAM uses a pulsed GaA1As light emitting source, which generates a narrow-band emission (half-power width of 80 nm) centered at 880 nm. This source is operated at an average output power of about 2mW. The radiation scattered by airborne particles is sensed over an angular range of approximately 45 to 95 degrees from the forward direction by means of a silicon-photovoltaic hydride detector with an internal low-noise preamplifier. An optical interference-type filter is incorporated to screen out any light whose wavelength differs from that of the pulsed source.

The MINIRAM is a light scattering aerosol monitor of the nephelometric type, i.e., the instrument continuously senses the combined scattering from the population of particles present within its sensing volume (approximately 1 cm^3) whose dimensions are large compared with the average separation between the individual airborne particles.

The MINIRAM is used to provide instantaneous indications of an air release and to trigger work practice changes.

7.5 Interferences and Corrective Actions

Excessive deposits of dust and condensible materials accumulated in the sensor can affect the accuracy of the measurement. Keeping the instrument in its case between uses, and regular preventative maintenance schedule will minimize these effects.

7.6 Safety Precautions

No hazards are known. The MINIRAM is certified to be intrinsically safe.

7.7 Routine Preventive Maintenance

When the MINIRAM is not being operated it should be placed in its shipping case which should then be closed. This will minimize the amount of particle contamination of the inner surfaces of the sensing chamber.

After prolonged operation and exposure to particulate-laden air, the interior walls and the two glass windows of the sensing chamber may become contaminated with particles. Although repeated updating of the zero reference will correct errors resulting from such particle accumulations, eventually this contamination could affect the accuracy of the measurements as a result of excessive spurious scattering, and significant attenuation to the radiation passing through the glass windows of the sensing chamber.

An indication of excessive chamber contamination is provided by the zero level reading, which should not exceed 3 mg/m^3. Note that his background signal is subtracted from the measurement signal electronically. Therefore, a zero reading of 3.0 mg/m^3 does not obscure the trigger value of 2.5 mg/m^3.

In order to clean a soiled sensing chamber, remove that chamber and wash it with soap and water, rinsing thoroughly to remove any residues from the glass windows and interior of the chamber. Do not use solvents. Do not rub interior surfaces of the chamber (coated version). Allow the sensing chamber to dry completely and reinsert into the MINIRAM.

The preventative maintenance schedule is summarized in Table B.2.

8.0 REAGENTS AND CALIBRATION STANDARDS

The manufacturer's literature states that the MINIRAM's factory calibration will remain stable, except for zero drift, over long periods of time. Each MINIRAM will be returned to the factory for re-calibration once every six months.

9.0 CALIBRATION PROCEDURES

9.1 Field Calibration

There are no calibration procedures for field use. The units will be returned to the factory for semi-annual calibration. The MINIRAM is calibrated at the factory against a filter-gravimetric reference using a standard test dust (Arizona road dust). Calibrated spare MINIRAMs will be available to replace instruments undergoing repair.

10.0 ANALYTICAL MEASUREMENT DATA SHEET

After the daily zero adjustment has been made and recorded on the Quality Control Report Form, the MINIRAM will be used to measure aerosol concentrations upwind and downwind of the work area. The maximum concentration for 5 consecutive 1-minute intervals will be recorded on the Data Log (Figure B.1). The 1-minute average

concentration will be calculated and entered on the Data Log. If the average downwind concentration exceeds the average upwind concentration by 1 mg/m^3 for a continuous 30-minute period, then measures will be implemented to protect workers in the CRZ and control release of particulate matter from site activities.

11.0 DATA TREATMENT

The MINIRAM display shows aerosol concentrations in mg/m3. No calculations on the part of the operator are necessary.

12.0 DATA DELIVERABLES

Data generated from the portable monitoring using the MINIRAM will be recorded on the data form shown on Figure B.1.

13.0 QC REQUIREMENTS

Two QC checks will be made daily; a zero check and a reference scatter check.

13.1 Zero Check

Place the MINIRAM in the measurement mode; allow it to warm up and stabilize.

Press the zero and record the current value of the zero concentration that the MINIRAM is subtracting from measurements. Record the current zero value on the Quality Control Report Form (Figure B.2).

Remove the rubber bulb filter assembly from the Z-Bag. Place the Z-Bag on a flat surface with red flow fitting facing up. Flatten bag. Remove small plastic cap from flow fitting on bag.

Insert ribbed elbow connector (attached to filter cartridge) into red flow fitting of plastic bag, until connector is flush with bottom of red flow fitting.

MINIRAM should be in its OFF condition (observe display). If display is blanked, or if MINIRAM is in the MEAS mode, key OFF.

Open Z-Bag and place MINIRAM inside, approximately at its center.

Key ZERO through the open end of the Z-Bag. Immediately zip-close the Z-Bag and begin to pump hand bulb.

Z-Bag should inflate as hand pumping continues, up to a height of about five inches (12 cm). Continue pumping gently to maintain bag interior pressure, until the MINIRAM displays OFF again.

Unzip Z-Bag and remove MINIRAM. MINIRAM is now ready for monitoring.

Place rubber bulb/filter assembly inside Z-Bag, and plug small plastic cap into flow fitting to close it. Zip close while flattening Z-Bag to store it to ensure cleanliness of the bag interior.

CAUTION: Do not expose Z-Bag to sub-zero freezing temperature as the plastic zippered bag may crack

Return the MINIRAM to the measure position and repeat the first two steps. Record the updated zero value on the Quality Control Report Form (Figure B.2).

13.2 Reference Scatter Value

Remove the sensing chamber by gently pushing it away from the display/control panel end, using both thumbs. Slide the sensing unit out of its channel. Do not touch the two lenses that are now exposed.

Install the reference scatter MIE model PDM-RS.

Place the MINIRAM in the MEAS mode. Record the value of particle concentration displayed on the Quality Control Report Form (Figure B.2).

Calculate the percent deviation from the initial (new machine) value.

Page _____ of _____ Date: _____ _____ _____
Yr. Mo. Day

FIGURE B.1
AIR MONITORING LOG

PID _____ MINIRAM _____

Start Time _____

Location _____ Sampler _____

First 5 one-min readings Start Time _____ Sample Location _____

Temp _____ Wind Speed _____ Dir _____

PID _____ _____ _____ _____ _____ Average _____

MINIRAM _____ _____ _____ _____ _____ Average _____

Second 5 one-min readings Start Time _____ Sample Location _____

Temp _____ Wind Speed _____ Dir _____

PID _____ _____ _____ _____ _____ Average _____

MINIRAM _____ _____ _____ _____ _____ Average _____

Third 5 one-min readings Start Time _____ Sample Location _____

Temp _____ Wind Speed _____ Dir _____

PID _____ _____ _____ _____ _____ Average _____

MINIRAM _____ _____ _____ _____ _____ Average _____

Fourth 5 one-min readings Start Time _____ Sample Location _____

Temp _____ Wind Speed _____ Dir _____

PID _____ _____ _____ _____ _____ Average _____

MINIRAM _____ _____ _____ _____ _____ Average _____

Page _____ of _____ Date: _____ _____ _____
Yr. Mo. Day

FIGURE B.1 -- CONTINUED
AIR MONITORING LOG

Continuing 5 one-min readings Start Time _____ Sample Location _____
Temp _____ Wind Speed _____ Dir _____
PID _____ _____ _____ _____ _____ Average _____
MINIRAM _____ _____ _____ _____ _____ Average _____

Continuing 5 one-min readings Start Time _____ Sample Location _____
Temp _____ Wind Speed _____ Dir _____
PID _____ _____ _____ _____ _____ Average _____
MINIRAM _____ _____ _____ _____ _____ Average _____

Continuing 5 one-min readings Start Time _____ Sample Location _____
Temp _____ Wind Speed _____ Dir _____
PID _____ _____ _____ _____ _____ Average _____
MINIRAM _____ _____ _____ _____ _____ Average _____

Continuing 5 one-min readings Start Time _____ Sample Location _____
Temp _____ Wind Speed _____ Dir _____
PID _____ _____ _____ _____ _____ Average _____
MINIRAM _____ _____ _____ _____ _____ Average _____

Page _____ of _____ Date: _____

_____ _____

Mo. Day Yr.

FIGURE B.2
QUALITY CONTROL REPORT FORM
MINIRAM

Parameter
Month/Year

Date	Initial Zero Value	Updated Zero Value	Reference Scatter Reading	Deviation(1) (%)
Initial				

Page _____ of _____ Date: _____

_____ _____

Mo. Day Yr.

FIGURE B.2 (Continued)
QUALITY CONTROL REPORT FORM
MINIRAM

Parameter
Month/Year

Date	Initial Zero Value	Updated Zero Value	Reference Scatter Reading	Deviation(1) (%)
Initial				

(1) $$\text{Deviation} = \frac{\text{Initial RS - Current RS}}{\text{Initial RS}} \times 100$$

Table B.1
Target Control Limits

QC Parameter	Control Limit
Completeness	90%
Precision	0.006 mg/m^3
Accuracy	± 5%
Detection Limit	0.01 mg/m^3

Table B.2
Preventive Maintenance Schedule

Task	Frequency
Store in Case	When not in use
Charge Battery	Daily
Clean Windows	When zero level reading = 3 mg/m^3

EDGEWOOD CHEMICAL BIOLOGICAL CENTER

CHEMICAL APPLICATIONS DIVISION

MONITORING BRANCH

AIR MONITORING PLAN

FOR

FT. McCLELLAN,ALABAMA

September, 1999

U.S. ARMY SOLDIER BIOLOGICAL CHEMICAL COMMAND

1.0 INTRODUCTION. 4

1.1 PURPOSE. 4

1.2 SCOPE. 4

2.0 RESPONSIBILITIES. 4

3.0 MONITORING. 5

3.1 TERMS. 5

3.2 TYPES OF MONITORING FOR FT. MCCLELLAN 8

3.2.3 REAL TIME MONITORING. 9

3.2.4 CONFIRMATION/HISTORICAL. 9

3.2.5 SOIL SAMPLE HEADSPACE MONITORING AND VERIFICATION. 9

3.3 MONITORING PROCEDURES/ANALYSIS. 9

3.3.2 REAL TIME. 10

3.3.2.5 DATA EVALUATION 11

3.3.2.6 CONTROL SAMPLES 11

3.3.2.7 QUALITY CONTROL OF AGENT SAMPLE LINES 11

3.3.2.8 OP-FTIR MONITORING 12

3.3.2.9. CONTROL SAMPLES 12

3.3.3 CONFIRMATION/HISTORICAL. 14

3.3.4 SOIL HEADSPACE MONITORING 14

3.3.5 SCRAP/PPE/BULK ITEMS HEADSPACE MONITORING.....16

3.4 HISTORICAL RECORDS.....146

3.5 QUALITY CONTROL. 16

3.6 MONITORING CONTINGENCY.....16

1.0 INTRODUCTION.

This document presents a monitoring plan for the U.S. Army Corps of Engineers, Huntsville remediation efforts at Fort McClellan, Alabama (Ft. McClellan).

1.1 PURPOSE.

The purpose of this plan is to illustrate the strategy used by U. S. Army Corps of Engineers to monitor the airborne concentrations of chemical warfare materiel (CWM) during operations at Ft. McClellan.

1.2 SCOPE.

This plan establishes the policies, objectives, procedures, and responsibilities for the execution of a monitoring program at Ft. McClellan. This plan describes the rationale for monitoring strategies and choice of monitoring equipment. This monitoring plan applies to the screening of air samples and soil samples containing suspected chemical agent contamination at all facilities and operations within Ft. McClellan.

1.3 OBJECTIVES.

The objectives of this plan are:

A. To illustrate the monitoring method used for each CWM operation performed at the Ft. McClellan.

B. To assure that workers and public safety and health are maintained by providing adequate environmental monitoring as specified in AR-50-6, AR 385-61, and ER 385-1-92.

2.0 RESPONSIBILITIES.

Soldiers, Biological, Chemical Command (SBCCOM) will:

Collect and retain all CWM-related air monitoring data generated during this project.

Provide guidance on monitoring operations conducted on-site.

Conduct on-site analysis of headspace samples collected from soil and scrap/PPE/bulk samples and if necessary, extracts of soil and surface water samples for CWM.

Provide confirmation analysis results for air samples of suspected CWM detection.

Provide equipment and trained and certified personnel to operate MINICAMS and maintain certification data as part of the Monitoring Branch 40-year database.

Provide trained and certified personnel to set-up, and calibrate monitoring equipment and collect monitoring samples for general area and historical monitoring stations.

Perform air-monitoring procedures as outlined in the Corps of Engineers Scope of Work, and consistent with SBCCOM monitoring capabilities.

3.0 MONITORING.

The intent of air monitoring is to indicate to workers when a hazardous CWM atmosphere is present and to maintain a record of employee exposure to airborne CWM, thus ensuring the safety of the operators, the environment, and the surrounding communities. The choice of monitoring equipment is based on the type of monitoring to be performed and the types of agent involved. The location of monitors or sample ports is based on the operation, the airflow in the area, and the location of the source of agents.

IN THE EVENT OF A POSITIVE RESPONSE TO AGENT, IN EXCESS OF 1 TIMES THE AEL FROM AIR MONITORING AND/OR SOLID SORBENT ANALYSIS, ECBC MONITORING BRANCH PERSONNEL WILL IMMEDIATELY NOTIFY THE SITE SAFETY OFFICER (SS0)

3.1 TERMS.

3.1.1 Airborne Exposure Limit (AEL).

The AEL is the maximum allowable concentration in the air for occupational and general population exposures of any Chemical Warfare Material. Airborne exposure limits (AEL) for agents are contained in AR 385-61 and Department of the Army (DA) Pamphlets 40-8 and 40-173. Unless otherwise noted, AEL in this document refers to the 8-hour Time Weighted Average (TWA) for unmasked agent workers.

3.1.2 Depot Area Air Monitoring System (DAAMS).

DAAMS is a portable air-sampling unit, which is designed to draw a controlled volume of air through a glass sampling tube filled with a solid sorbent (e.g. Tenax GC). As the air is passed through the sampling tube, agent is collected on a sorbent bed. After sampling for the predetermined period of time and flow rate, the tube is removed from the sampling line. The tube is transferred to the RTAP or MEAP where it is analyzed (approximately one hour process time) or, if necessary to prevent work stoppages, sent to the ECBC Monitoring Branch laboratory. The results of the analyses will indicate the presence or absence, the type, and the quantity of CWM collected in the sampling tubes. This technique will provide a detection capability to the AEL (H = 0.003 mg/m^3, L = 0.003 mg/m^3, GB = 0.0001 mg/m^3, VX = 0.00001mg/m^3).

3.1.3 Fenceline Open-path Fourier Transform Infrared Spectrometry Air Monitoring (Op-FTIR).

Open-path air monitoring of gaseous compounds is a direct extension of laboratory spectroscopy systems that can identify and quantify gases based on their spectral absorption characteristics. An open-path FTIR system sends a beam of light through open air, to a reflector and then back to a receiver. The receiver detects gases that absorb light and if the gases are present in the beam, they can be identified and quantified. (This technique is capable of detecting phosgene at the AEL level (O.1 PPM) and real time detection for nerve agent (GB: .02 mg/m^3), mustard (H: 0.03 mg/m^3) and Lewisite (L: 0.02 mg/m^3). The wide ban path (150 meters long and 0.3 meters wide) makes Op-FTIR a valuable technique to support the Near Real Time (NRT) point source monitoring techniques (e.g. DAAMS). This technique will be incorporated into the monitoring scheme based upon the terrain of each site and the availability of equipment.

3.1.4 Flow Log.

The Flow Log is an ECBC, Monitoring Branch record of the flow measurements taken during the set up and operations of monitoring stations.

3.1.5 General Area Monitoring.

General area monitoring provides notification to personnel that there is a problem and that action must be taken. The monitoring device or sampling ports are placed in strategic locations in the work area and on designated workers where there is a potential for encountering agent vapors. The sample locations are determined based on such factors as the agent involved, the airflow patterns in the area, the operation(s) being performed, and the location of the source of the potential release.

3.1.6 Immediately Dangerous to Life and Health (IDLH).

A condition posing an immediate threat to life or health regardless of PPE use, including situations where concentrations of contaminants (including military toxic chemical agents) require self-contained, full facepiece, positive pressure supplied air respirators. This condition represents the maximum concentration from which, in the event of respirator failure, the wearer could escape without the respirator and without experiencing any escape impairing or irreversible health effects. For the purpose of the military toxic chemical agent program, IDLH includes atmospheres where oxygen content by volume is less than 19.5 percent.

3.1.7 Internal Operating Procedures (IOP).

Previously approved written monitoring and analysis procedures used by the SBCCOM at remediation sites.

3.1.8 Low-level Alarm.

Low-level alarm is a device used in conjunction with a low-level detector, which

produces an audible sound and flashing light when the appropriate concentration at or above the AEL is detected.

3.1.9 Low-level Detectors.

Low-level detectors are those detection devices that can provide detection capability for concentrations at or below the established AEL for Chemical Warfare Material. Examples include DAAMS, MINICAMS, and the instrumentation used in the RTAP and MEAP.

3.1.10 Mobile Environmental Analytical Platform (MEAP).

The MEAP is a self-contained mobile platform that can be moved from site to site. It contains all the equipment necessary to analyze and confirm samples taken with DAAMS tubes and extracts of soil and surface water samples. It is designed as a fully functional trailer laboratory to cover the critical on-site chemical analysis and monitoring needs of this project.

3.1.11 Miniature Chemical Agent Monitoring System (MINICAMS).

MINICAMS is an automatic air monitoring system that collects compounds on a solid sorbent trap, thermally desorbs them into a capillary gas chromatography column for separation, detects the compounds with a Flame Photometric Detector (FPD) or Halogen Specific Detector (XSD). It is a lightweight, portable, low-level detector designed to respond in less than ten minutes with alarm capability.

3.1.12 Personnel Roster.

The personnel record is a record of the people on-site during the conduct of operations at Ft. McClellan.

3.1.13 QL.

A Quality Laboratory sample is a quality control sample that has been spiked with a solution of an analyzed dilute chemical agent in the laboratory but which has not been aspirated at a sampling site.

3.1.14 QP.

A Quality Plant sample is a quality control sample that has been spiked with a solution of an analyzed dilute chemical agent and exposed to the sampling environment.

3.1.15 Method Detection Limit (MDL).

The method detection limit (MDL) is the lowest concentration of standard used for developing the analyte calibration curve.

3.1.16 Real Time Analysis Platform (RTAP).

The RTAP provides an automatic, continuous, environmental monitoring system that collects compounds on a solid sorbent trap, thermally desorbs them into a capillary gas chromatography column. The GC detects eluting compounds with simultaneous phosphorous and sulfur, dual headed Flame Photometric Detector (FPD), or an Electron Capture Detector (ECD). The RTAP is a self-contained mobile platform that can be moved from site to site. It is a mobile, low level monitor designed to respond in less than 10 minutes with alarm capability.

3.1.17 Scratch Log.

The Scratch Log is an ECBD, Monitoring Branch record that contains all pertinent information on a short of analytical results. Also used as tracking device for samples and chain of custody.

3.1.18 Time Weighted Average (TWA).

TWA is the maximum allowable concentration in the air for occupational exposures of any Chemical Warfare Material in any eight-hour work shift of a forty-hour workweek. CWM concentrations above the TWA level require the employees in this environment to don protective clothing or leave the work site.

3.1.19 3X (XXX).

XXX indicates that the item has been surfaced decontaminated by approved procedures, bagged or contained, and that appropriate tests or monitoring have verified that vapor concentrations above the AEL or TWA limits for the specific agent(s) do not exist. XXX does not apply to a decontaminated liquid, detoxified liquid, soil, or a gas. Some items may be released from Government control if all Federal, State and local provisions have been met.

3.2 TYPES OF MONITORING FOR FT. McCLELLAN

3.2.1 Operations will be conducted IAW Monitoring Branch IOPs: MT-10, "Site Monitoring Procedures Using DAAMS Tubes and the Real Time Analytical Platform (RTAP)", which is included as Appendix A to this plan; MT-16, "Operation and Maintenance Procedures for MINICAMS Mounted in a Mobile Vehicle', which is included as Appendix B to this plan; MT-17, "Operation and Maintenance Procedures for Real Time Monitoring Support During On-Site Operations", if needed, which is attached as Appendix C; and MT-18, "Field Operating and Maintenance Procedure for Open Path Fourier Transform Infrared Spectrometer (Op-FTIR)", where applicable, which is attached as Appendix D.

3.2.2 All monitoring operations will be conducted in accordance with the ECBC's Monitoring Branch's Quality Control Plan. All certification data will be maintained as part of the Monitoring Branch 40-year database.

3.2.3 Real Time Monitoring.

SBCCOM will conduct real time monitoring for CWM at Ft. McClellan in support of remediation efforts as needed. The exclusion zone (EZ) and selected locations in the contamination reduction zone (CRZ) will be monitored in real time with MINICAMS, Op-FTIRs, and/or RTAP as dictated by the work scenarios. Primary monitoring will be provided by a mobile platform equipped with MINICAMS monitoring for Mustard (H), Lewisite (L), nerve agents GB and VX, and the industrial chemicals Phosgene (CG), Cyanogen Chloride (CK) and Chloropicrin (PS). A back up unit, an Op-FTIR, will be positioned downwind from the monitoring site. The Op-FTIR will provide real time (at levels above the AEL) and historical monitoring for Lewisite and Mustard, but will also has the capability to monitor for GB, and Phosgene.

3.2.4 Confirmation/Historical.

Historical monitoring will be achieved through general area monitoring using DAAMS tubes, and Op-FTIR air monitoring. Because of the high volatility of phosgene and Cyanogen Chloride DAAMS tubes are not amenable for collection of these compounds. It is recommended that Dragger tubes be used for these compounds. It is highly likely that DAAMS tubes can be used for the collection and analysis of Chloropicrin. The DAAMS samples will not be used to immediately warn of hazardous conditions, but they will be used to document conditions over time and to confirm the results of the real time monitors. The DAAMS samples for Mustard and Lewisite may be analyzed in the RTAP/MEAP that will be on site. If the analytical equipment is not operational, in need of repair, or should a positive response need confirmation by Mass Spectrometry, the DAAMS tubes will be mailed via Federal Express to the ECBC Laboratory for analysis. The Op-FTIR will provide near real time monitoring for Lewisite and Mustard and GB above the AEL, but it does have the capability to monitor for Phosgene at the AEL. A subsequent review, analysis, and verification of the Op-FTIR records will be conducted at ECBC's Chemical Applications Division for these compounds if requested by the Corps of Engineers, Huntsville.

3.2.5 Soil Sample Headspace Monitoring and Verification.

Prior to shipment off site, headspace monitoring of soil samples will be completed through the use of DAAMS tubes and/or MINICAMS for Mustard, Lewisite, GB and VX.

3.2.6 Quality control analyses is maintained and verification testing is performed according to the Monitoring Branch Quality Control Plan or the off-site laboratory's Quality Control Plan.

3.2.7 Damaged sample containers, and sample-labeling discrepancies will be noted on the COC form. The laboratory will contact the Project Manager if a problem develops for resolution.

3.3 MONITORING PROCEDURES/ANALYSIS.

3.3.1 Upon receipt of the DAAMS sample tubes and signing of the proper chain-of-custody

sheets, the DAAMS tubes will be desorbed on a Dynatherm ACEM 900 thermal desorption unit and analyzed on a Hewlett-Packard 5890 GC with a dual Flame Photometric Detector per IOP #MT-10. The MINICAMS will be calibrated for Mustard, Lewisite, Phosgene, Cyanogen Chloride and Chloropicrin using the XSD detector per MINICAMS IOP # MT-16. ECBC will maintain control over all results and data generated from the analyses. A matrix of monitoring procedures is attached as Table 1. The Op-FTIR air monitors will be calibrated per Op-FTIR IOP # MT-18. During the project, ECBC will maintain control over all results and data generated from the analyses. All data generated during the project will be tabulated, formalized and turned over to the Huntsville Corps of Engineers after completion of the project. ECBC will incorporate the data generated into the Monitoring Branch 40 year data storage program, should access to additional information be required. The detection levels for Mustard, GB, and Lewisite using the Op-FTIR are not at the AEL, but the wide ban path (150 meters long and 0.3 meters wide) makes this a valuable technique to support the Near Real Time (NRT) point source monitoring techniques.

3.3.2 Real Time.

3.3.2.1 Real time air monitoring will be accomplished by using the MINICAMS and RTAP set to alarm at 20 percent of TWA hazard level for H and L and 80 percent of the hazard level for GB, VX, CG, CK, and PS. The MINICAMS/RTAP system will provide warning of airborne exposure hazards at the work site. Op-FTIR air monitors will provide continuous real-time air monitor along the downwind perimeter of the site.

3.3.2.2 The MINICAMS can detect H, L, GB, VX, CG, CK, and PS at either IDLH (immediately dangerous to life and health) or TWA (time weighted average) levels. The system consists of a monitor (sample collection, analysis, detection, and alarm equipment), vacuum pump, heated sample transfer lines, compressed gases, and computer. In the sampling cycle, a vacuum pump draws air into the MINICAMS system through a heated sample transfer line. The transfer line is heated to prevent condensation of any chemical agent on the walls of the transfer line. The air sample is drawn through an automated gas chromatograph that first collects agent on a solid sorbent and then thermally desorbs the agent into a separation column for analysis. A Halogen Specific Detector (XSD), which responds to Chlorine containing compounds or a Flame Photometric Detector (FPD) which responds to Phosphorous and Sulfur containing compounds, detects the components eluting from the column. A direct readout, in units of the hazard level, is provided. A permanent trace of the chromatogram is stored in the computer. If chemical agent contamination is detected at the hazard level preprogrammed by the operator, the MINICAMS system alarm will activate and the workers will take appropriate actions. The MINICAMS does not sample continuously because sampling is stopped during the thermal-desorption step.

3.3.2.3 Each MINICAMS/RTAP unit shall be checked daily to determine if calibration is required. Appropriate action shall be taken to correct any malfunctions found. After completion of the instrument observation, a chemical agent challenge shall be made to verify that the MINICAMS/RTAP performance is acceptable and to see whether calibration is necessary. An aliquot of a Quality Control (QC) standard solution of the agent(s) of interest is injected. The concentration of the standard solution shall be such that the injection contains 1.0 +/- 10% TWA or IDLH of the agent, depending on the hazard level the MINICAMS/RTAP is programmed to

detect. If the MINICAMS/RTAP response is within 25% of the challenge level, it is not necessary to calibrate the MINICAMS/RTAP unit. If the response is not within 25% of the actual challenge level, the unit shall be challenged again. If it fails a second challenge, it shall be recalibrated.

3.3.2.4 The MINICAMS/RTAP unit shall be calibrated IAW the instructions given in the Monitoring Branch IOP MT-16 or MT-17. After the calibration has been completed, an injection containing 1 TWA of the agent shall be made. If the MINICAMS response is between .75 and 1.25 TWA, the calibration is considered satisfactory.

3.3.2.5 Data Evaluation

The performance of the MINICAMS/RTAP is monitored daily. Each day a QL challenge is made to the MINICAMS/RTAP using standards of known concentration. Each standard is prepared to reflect the 1 TWA level for the agent being monitored. The area, peak height, retention time, peak width and injection size and the name of the technician are recorded on a log sheet.

3.3.2.6 Control Samples

3.3.2.6.1 Each day when the instrument is functioning properly, a QP challenge shall be injected in the heated sample line of the MINICAMS using standard solutions of chemical agents at concentrations which will give readings of one TWA.

3.3.2.6.2 A MINICAMS/RTAP sample is defined as the volume of air, which is sampled during one automatic cycle of the instrument for the agent being monitored. To prepare a challenge sample for the MINICAMS/RTAP, known volumes of standards of dilute chemical agent are injected into the sample inlet.

3.3.2.7 Quality Control of Agent Sample Lines

3.3.2.7.1 All agent sample lines will be challenged daily with chemical agent to verify that their transmission efficiency remains high and the results are documented. A calibrated MINICAMS/RTAP as the detector will be used to test the sample line. Prior to testing the sample line, the MINICAMS/RTAP will be challenged so that the transmission efficiency of the sample line may be determined directly. Spiking levels are the same as those normally used for daily challenges. All injections will be at the sample collection end of the sample line.

3.3.2.7.2 A record of the test date, time, and result will be maintained for each sample line. This record will be maintained at the monitoring station to which the sample line is connected.

3.3.2.7.3 All challenges of chemical agent monitors with agent will be recorded on an agent challenge log sheet.

3.3.2.8 Op-FTIR Monitoring

Open-path air monitoring can detect and quantify chemical agent, their precursors and breakdown products on a real-time basis. The Op-FTIR system utilizes the spectral absorption characteristics to identify and quantify gaseous compounds. Typically open-path systems send a beam of light through the open air, to a reflector and then back to a receiver. If gases that absorb light are present in the beam, they can be identified and quantified. The system will be set up downwind of the work site and will provide a record of any gaseous emissions crossing the fenceline. A zeropath background scan is acquired at the site just prior to continuous air monitoring. The pathlength of the background scan is short and therefore any atmospheric pollutants are minimized. The zeropath background scans will be used as the "clean" reference only in cases where other background correction techniques are unavailable.

3.3.2.8.1 Data will be evaluated in two phases if requested by the Corps of Engineers, Huntsville. The first phase will include daily reports on H, L, GB, and CG. This data will be given to the SSO or his designee as soon as they are available, normally, the morning after the samples have been collected. The second phase is a subsequent review, analysis, and verification of the Op-FTIR records conducted at ECBC's Chemical Applications Division for these and related compounds, if requested by the Corps of Engineers, Huntsville.

3.3.2.9. Control Samples

The Op-FTIR collects data in two regions of infrared adsorbance, 750 cm to 1300 cm and 2500 cm to 3050 cm. Introducing standard gases of sulfur hexaflouride and butane tests the instruments operation in these two regions. The data collected from these two compounds is challenged daily and confirms the instrument operation in the same absorbance spectral region as H, L, GB, and CG.

Table 1
SBCCOM Monitoring Matrix

	MINICAMS (real time)	DAAMS (perimeter)	DAAMS (general area)	RTAP (Real time)	Op-FTIR
Locations	3 - Work site 3 - PDS 3 - RTAP	4 - perimeter	1-2 locations within the exclusion zone	1- Connected to shore power for backup use and analysis of DAAMS tubes	Down wind from the work site.
Frequency	Continuous On site. RTAP in standby	Up to 8 hours	Up to 8 hours	Continuous During operation as needed	5 minute averages
Analysis Time	Approximately 10 minutes	Approximately 15 minutes	Approximately1 5 minutes	Approximately 10 minutes	Approximately 5 minutes
# People	2 MINICAMS operators	2 Sample Collection technicians	1 RTAP operator	1 RTAP operator	1 Op-FTIR operator
Target Agent	Mustard (H) Lewisite (L) Sarin (GB), (VX), Phosgene (CG) Cyanogen Chloride (CK), Chloropicrin (PS)	Mustard (H), Lewisite (L), Sarin (GB), (VX)	Mustard (H), Lewisite (L), Sarin (GB), (VX)	Mustard (H) Lewisite (L) Sarin (GB) (VX), Chloropicrin (PS)	Mustard (H), Lewisite (L), Sarin (GB), Phosgene (CG)
Lowest Level Of Detection	H - 0.00075mg/m^3 L - 0.00075mg/m^3 GB - 0.00003mg/m^3 VX - 0.000003mg/m^3 CG - 0.06 PPM CK - 0.06 PPM PS - 0.06 PPM	H: 2 ng L : 20 ng GB: 0.55 ng VX: 0.06 ng	H: 2 ng L: 20 ng GB: 0.55 ng VX: 0.06 ng	H - 0.00075mg/m^3 L - 0.00075mg/m^3 GB - 0.00003mg/m^3 VX - 0.000003mg/m^3 PS - 0.06 PPM	H:0.03 mg/m^3 L :0.01 mg/m^3 GB:0.02 mg/m^3 CG:0.07 mg/m^3
Action Level	H: 0.003 mg/m^3 L: Any positive reading ≥ MDL. GB: 0.0001 mg/m^3 VX: 0.00001 mg/m^3 CG: 0.1 PPM CK: 0.1 PPM PS: 0.1 PPM	H: 0.003 mg/m^3 L: 0.003 mg/m^3 GB: 0.0001 mg/m^3 VX: 0.00001 mg/m^3	H: 0.003 mg/m^3 L: 0.003 mg/m^3 GB: 0.0001 mg/m^3 VX: 0.00001 mg/m^3	H: 0.003 mg/m^3 L: Any positive reading ≥ MDL. GB: 0.0001 mg/m^3 VX: 0.00001 mg/m^3 PS: 0.1 PPM	H:0.03 mg/m^3 L :0.01 mg/m^3 GB:0.02 mg/m^3 CG:0.07 mg/m^3

3.3.3 Confirmation/Historical.

Historical air samples may be collected over several hours, as in background samples or a few minutes, as in soil sample headspace. Also, they can be collected on a daily basis or periodically.

3.3.3.1 DAAMS sampling stations that will be located along the perimeter of the work area and will collect samples to confirm real time alarms for H, nerve agents GB and VX, PS, and L. In addition, DAAMS tubes will be placed on two members of the crew working in the EZ to asertain a representative sample of the work environment. DAAMS tubes will be collected and analyzed for Mustard, Lewisite, GB and VX. The DAAMS results will also provide a historical record. DAAMS analysis requires sampling stations, solid sorbent tubes, and a modified GC. At each DAAMS station, a vacuum pump will be used to continuously draw air through the DAAMS solid sorbent tube at a controlled flow rate. After the required time (per Monitoring Branch QC Plan and IOP # MT 10), the DAAMS tube will be collected and transported to the RTAP or, when necessary, the ECBC laboratory for sample analysis. The DAAMS tube is then heated allowing the trapped chemical to be desorbed. A Nitrogen flow through the tube carries the desorbed chemical into a capillary column for chromatographic separation. The separated chemicals elute into the detector, where they can be identified and quantified as chemical agents.

3.3.3.2 Designated workers are fitted with portable sampling pumps. Each pump is set with two - four DAAMS tubes to monitor for H, nerve agents GB and VX, PS, and L. DAAMS tubes are attached on the worker. General Area Monitoring pumps are run for a maximum of eight hours and a minimum of one hour and fifteen minutes per day. Flow rates for air sampling pumps are determined in accordance with the internal operating procedures used by the Monitoring Branch personnel. See MT-10 attached as Appendix for Set up procedures.

3.3.3.3 Notify the Site Safety Officer (SSO) at Ft. McClellan of all confirmed detection's of any target analytes. This includes concentration levels below the TWA or AEL value.

3.3.3.4 Maintain copies of all air sampling results. Forward a copy of the results to the USACE-Huntsville, Project Health and Safety Manager for further disposition.

3.3.4 Soil Headspace Monitoring.

Under normal conditions soil sample headspace analysis will be conducted using the MINICAMS. DAAMS tubes will be used to confirm all positive MINICAMS readings.

Headspace Monitoring of Soil Samples using the RTAP or MINICAMS.

1. Contractor delivers soil sample to monitoring personnel.

2. Place up to six samples in a sample box heated to 90 ± 10 degrees Fahrenheit. Open bags and remove sample jar lids. Close sample box lid and allow samples to equilibrate for 15 minutes.

3. Connect MINICAMS probe to sample port of the heated sample box. Run two complete cycles on the MINICAMS.

a. If MINICAMS reading is below the AEL (clear), go to step 16.

b. If MINICAMS reading is above the AEL (hot) for agent, go to step 4.

4. Don Mask and Gloves.

5. Open sample box and replace lids on sample containers.

6. Allow samples to re-equilibrate for 15 minutes.

7. Connect MINICAMS to sample port of heated sample box until a clear reading is obtained on the MINICAMS.

8. Don mask and gloves, open lid of sample box and remove all but one sample container. Samples will be monitored one at a time.

9. Remove lid from sample container. Close the lid of the sample box. Connect MINICAMS probe. Run one cycle on the MINICAMS. Close the sample jar and repeat this procedure on the next sample. All samples must be monitored to assure the hot samples are located. Segregate the samples giving a hot response. If a hot sample cannot be identified, go to step 11.

10. Collect DAAMS tubes on the hot samples. Collect tubes at 500 milliliters per minute for 30 minutes. Give tubes to the monitoring technician for analysis.

11. Place split samples in the heated sample box.

12. Allow samples to re-equilibrate for 15 minutes.

13. Connect MINICAMS to sample port of heated sample box until a clear reading is obtained on the MINICAMS.

14. Don mask and gloves, open lid of sample box. Samples will be monitored on at a time.

15. Remove lid from sample container. Connect MINICAMS probe. Run one cycle on the MINICAMS. Close the sample jar and repeat this procedure on the next sample. All samples must be monitored to assure the hot samples are located. Segregate the samples giving a hot response.

16. Give clear samples to the monitoring technician for proper disposition in accordance with the approved site-specific investigative-derived waste (IDW) disposal plan.

3.3.4.1 Notify the Site Safety Officer (SSO) at Ft. McClellan of all confirmed detection's of any target analytes. This includes concentration levels below the TWA or AEL value.

3.3.4.2 Maintain copies of all air sampling results. Forward a copy of the results to the USACE-Huntsville, Project Health and Safety Manager for further disposition.

3.3.5 Scrap/PPE/Bulk Items Headspace Monitoring.

A sample of scrap, PPE, or a bulk item must be contained and heated to a minimum of 70°F for 4 hours prior to monitoring. However, monitoring may occur if the temperature of the contained material reaches a temperature of at least 50°F and is under full sunlight conditions.

Once the item has been contained for 4 hours and the meets the referenced temperatures, monitoring may proceed following procedures outlined in the "Soil Headspace Monitoring" section. It is important to note that the hot box will not be utilized for scrap/PPE/bulk items.

3.4 Historical Records.

Monitoring branch technicians shall maintain the electronic database for all samples collected with DAAMS tubes, records of MINICAMS, and Op-FTIR analyses, flow calibrations, and challenges of the MINICAMS, Op-FTIR, RTAP, and MEAP. Monitoring branch personnel shall be responsible for certifying that monitoring operations are conducted according to this plan or the site-specific QC plan. ECBC will prepare a final report in support of the Ft. McClellan project and forward copies of all analytical results to the USACE - Huntsville Project Manager.

3.5 Quality Control.

At least two QP samples shall be run daily for each type of analysis performed. A 1.0 TWA QP sample shall be run every 20 samples on the DAAMS system and for instruments that are conducting real time monitoring, a minimum of every four hours on the MINICAMS and RTAP monitors.

3.6 Monitoring Contingency.

In the event of unforeseen circumstances, the Monitoring group will notify the On-Site Safety Officer to briefly halt operations in order to catch up in the analysis of field samples.

APPENDIX A

SITE MONITORING PROCEDURES USING DAAMS TUBES

AND

THE REAL TIME ANALYTICAL PLATFORM (RTAP)

Internal Operating Procedure: Operations Directorate

Monitoring Branch

Title: Site Monitoring Procedures Using DAAMS tubes and the Real Time Analytical Platform (RTAP)

Division: Chemical Operations

Branch: Monitoring Branch

Building/Area: In vicinity of E3346 and other areas nationwide

This internal operating procedure covers operations, methods and procedures of a general nature not covered by a standing operating procedure. This procedure will be effective until rescinded or superseded.

Changes to this procedure will be accomplished by submission of revisions or amendments for approval.

by:

K. Maguire
Monitoring Team

Approved by:

F. G. Lattin
Chief, Monitoring Branch

Date: December 4, 1998

IOP Number: MT-10

Revision Number: 1

Prepared by: K. Maguire
X8428

Approved by: F. G. Lattin
X4479

Title: Site Monitoring Procedures Using DAAMS Tubes and the Real Time Analytical Platform

Operator's Statement: I have read, or have had read to me the procedures in this IOP. I, by my signature below, indicate that I thoroughly understand and agree to abide by these instructions.

Signature	Date	Signature	Date

Supervisor's Statement: I have personally reviewed this IOP and, to the best of my knowledge, believe that the information listed herein is correct.

Supervisor: _____ **Date:** _____
F. G. Lattin

REAL TIME ANALYTICAL PLATFORM

General Information. For responsibilities, general safety requirements, first aid, decontamination, disposal, and emergency procedures refer to ERDECR 395-15. For hazards (general or specific) see the Material Safety Data Sheets (MSDS) at the site to be monitored.

Equipment Required:

Real Time Analytical Platform equipped with:

Gas chromatograph/dual flame photometric detector and/or GC/ECD
- Dynatherm ACEM 900
- Fume hood
- hydrogen and nitrogen/air generator
- safety equipment
- ChemStation with software

DAAMS Tubes
Sampling Pump
Calibrated Flow Meter
PC with Tag Program
Calibration Standards
Syringes and spiking block
Tubing
Gemini Dual Port Sampler
Distilled, deionized water

Detailed Procedures:

Departure to Site:

1. Ensure all loose items are secured.

2. Ensure that paper trays for all printers are filled.

3. Ensure that the label printer is filled.

4. Start up and check fuel level of power generators.

5. Check Daily Challenges and printouts to ensure instruments and data are within operating specifications IAW the Monitoring Branch QC Plan.

6. Cellular Phone in RTAP is operable and turned on.

7. Check oil level in vehicle and electrical power generators prior to starting

Initial Site Set-Up: DAAMS Tubes

1. Remove DAAMS tubes from the protective carriers. Inspect tubes to ensure there are no chipped ends or cracks and verify that the frit is clean. Do not use damaged tubes.

2. Write DAAMS tube numbers on upper right hand corner of the sample tag. **NOTE:** When using dual tubes the lowest numbered tube is listed first, with the second tube being listed below the first (See Figure A1). The lowest numbered DAAMS tube will be analyzed by the analyst/operators first, once the sampled is received. The second tube will be used for confirmation , if required

Figure A1. Field TagBldg. No. 1st Tube No.
Date 2nd Tube No.

Flow Rate 1st Tube	Flow Rate 2nd Tube	Sample ID	Flow Rate 1st Tube	Flow Rate 2nd Tube

(3 flow rates are required before samples are placed adjust flow with Gemini)

(3 flow rates are required after samples are picked DO NOT ADJUST FLOWS)

Time On _____ Time Off _____

3. Check sampling pumps for proper sampling time (4 hours for perimeter sampling and 2 hours for general area monitoring). Check that the harness is attached and that the Gemini Dual Port Samplers are connected.

4. Connect the downstream end of the tygon tubing harness to the air monitoring pump.

5. Connect the GLASS WOOL side of the DAAMS tube to the Gemini Dual Port Sampler (Gemini). Two DAAMS tubes will be used concurrently during the monitoring procedure. The analysis of the DAAMS tube during desorption is a one-shot occurrence. If the desorbed sample is not analyzed as anticipated, the sample cannot be recovered. Therefore, a second tube is used as a backup.

6. Using a calibrated flowmeter, adjust the flows through the DAAMS tubes by adjusting the setscrews on the Gemini to the required rates. Take three (3) readings with the calibrator. If the third reading is within 10 percent of the first two readings record the flow rates on the sample tag as indicated in Figure A1. Flow rates for specific sampling procedures are shown in Table 1.

Table 1. MONITORING FLOW AND SAMPLE RATES

Sample Type	Description and Preparation Procedures Prior to Sampling	Pump Sample Time	Flow Rates
1X Items (small)	Size should be limited to less than 3' x 3' x 3'.	30 min.	500 mls/min.
Soil Samples	Sample jar of soil shall be doubled bagged. Dual tubes shall be run on all soil samples.	30 min.	500 mls/min.
TAP Clothing	TAP clothing shall be double-bagged and sealed.	30 min.	500 mls/min.
1X Items (large)	Items shall be larger than 3 x 3 x 3 feet. Items should be placed on a pallet and wrapped in plastic. For extremely large items 2 samples should be taken on the items.	1 hour	250 mls/min.
Dual DAAMS Tubes Shall be Used for All Monitoring Listed			
General Area Monitoring	Monitors shall be placed on the person with the **2** DAAMS tubes.	2 hours	200 mls/min.
Perimeter Monitoring for Clean-up Sites	A minimum of 4 positions shall be set up. First position shall be located at the point source. Dual tubes shall be used for all positions.	2 hours	200 mls/min.
Area/Perimeter Monitoring	Area shall be monitored for 4 or 8 hours. A minimum of three positions shall be set up. Pumps can be set to run for 4 or 8 hours.	4 hours 8 hours	100 mls/min. 50 mls/min.

7. Locate and secure the pump on the area to be monitored so that it cannot be knocked over or entangled with personnel or equipment. Place perimeter stands (Positions A through D). Place the appropriate pumps on the stands and set up personnel monitors (See section on Personnel Monitoring with DAAMS Tubes). (All perimeter pumps and stands should be labeled A through D to avoid confusion prior to placement.)

8. Position A is at the work site. Position B is approximately 25 feet upwind from the work site. Positions C and D are approximately 25 feet downwind from the work site and are approximately 50 feet apart. See Figure A2.

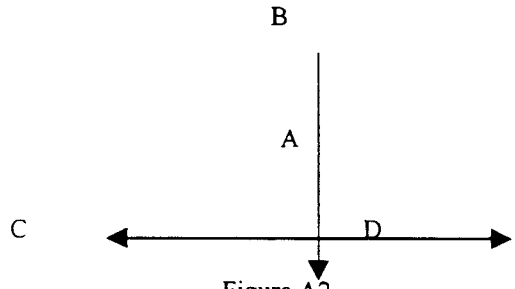

Figure A2.

9. All information must be recorded in the TAG program and on the tag itself. The information will depend on what type of monitoring is required. Enter information into the TAG program, print out tag and associated document and label sample. The program will prompt the user for appropriate information that must be included on the sample tag.

10. Fill out flow sheet with position ID. Enter the tube numbers in the space labeled tubes and record the flow rates taken.

11. When operations start, turn on the pump to start the sample and write the starting time on the field tag.

Initial Set Up: Background Monitoring with DAAMS Tubes

1. Outdoors: Assess the area and set up a minimum of three positions, (more if deemed necessary). Positions should be approximately 12 - 20 feet apart and set up approximately 50 feet down wind from the source to be monitored. See Figure A2.

2. Indoors: Assess the area and set up a minimum of two positions, (more if deemed necessary). For extremely small areas (10' x 10' or less), set up one position using dual tubes.

3. Refer to DAAMS tube set up, Steps 1-7, as applicable.

4. Fill out flow sheet with position ID. Enter the tube numbers in the space labeled tubes and record the flow rates taken.

5. Repeat steps 1-4 as appropriate throughout the day. Ensure that a set of perimeter monitors is always ready.

Initial Set Up: General Area Monitoring with DAAMS Tubes

General area sampling will be used for both first entry and quarterly period sampling requirements.

1. Refer to DAAMS tube set up, Steps 1-10, as applicable.

2. Secure the pump to the outside of the employee's clothing using a belt. Situate the pump as comfortably as possible without being entangled with the worker's clothing or nearby equipment.

3. Observe the pump for approximately three minutes to ensure it is working correctly. **Advise the wearer that under no circumstances are they to turn the pump on or off, not to smoke while wearing the pump and not to wear the pump in a port-a-pot.** Wearers shall notify monitoring personnel should any situation arise that requires removal or adjustment of the pump, or if pump stops.

4. Record Air Pump Calibration Flow Rates on the flow sheet using the **last** four digits of the monitored individual's SSN. The last four digits are used as the ID. Enter the tube numbers in the space labeled tubes and record the flow rates taken.

5. Repeat steps 1-5 as appropriate throughout the day. Ensure that a set of personnel monitors is always ready since personnel monitors are exchanged every two hours.

Initial Start Up: RTAP

1. Upon entering the RTAP, verify there is (shore) power going to the instruments.
If yes, go on to Step 4.

2. If no, check the circuit breakers on the wall just behind the drivers seat in the analytical portion of the truck. **If there is a tripped breaker, STOP.** Turn the GCs off (on the lower right side near the back). Next turn off the Hydrogen and Nitrogen generators - to prevent blowing internal fuses. Turn off all extraneous utilities, i.e. heated sample lines, overhead air vent, vacuum pump, hood, air conditioners/ heaters, computer monitors and printers. Leave the hard drive on. VERIFY that the system is drawing 10 amps or less. Flip the breaker, and proceed to turn the above mentioned

back on as needed. If the gas generators do not respond immediate, adjust the Electronic Pressure Control (EPC) accordingly to prevent the GC from going into safety shutdown.

3. For running off internal generators, initiate the following:

   (a) Start the supplemental power generators, and let them warm up for about 10 minutes.

   (b) Turn off extraneous utilities, i.e. heated sample lines, overhead air vent, vacuum pump, hood, air conditioners/heaters, computer monitors and, in this case, GC ovens.

   (c) Make sure that the system is BELOW 10 amps on the master power control panel BEFORE you unplug the vehicle from shore power. (Let the instruments run off one generator and the utilities run off of the other generator.)

   (d) Unplug the shore power cord from the RTAP's external outlet and turn on the utilities necessary.

4. Conduct an initial (morning) RTAP challenge (using a DAAMS Tube/GC). Check to see if the system is ready, the flame is lit and the ChemStation is in "Ready" status.

   (a) Before running any blanks, create a directory in the ChemStation. On the main menu screen, go into "Run Control" and then to "Sample Info" to enter your name, the project, etc. This should be updated every day. Record any troubleshooting or changes to the GC configuration on the GC Preventive Maintenance Log (Attachment 3). Run a blank (this can be done while the generators warm up). If the blank is normal (clear), spike the fast flow tube with 10 ul of the calibration standard as a warm up. Repeat. Next, spike the fast flow tube with 4µl of calibration standard and run the DAAMS tube. Record usage on the Usage Record (Attachment 1). Record **QP** results on the Monitoring Data Record (Attachment 2).

   (b) If the challenge passes, the **GC** system is ready to begin sampling.

   (c) If the challenge does not pass, repeat the challenge. If the second challenge fails, per the Monitoring Branch Quality Control (QC) Plan, recalibrate or troubleshoot (see system manual). Record standard usage on the agent usage record (Attachment 1). Record QP results on the Monitoring Data Record (Attachment 2).

Initial Set Up: DAAMS Monitoring of Bulk Material

1. Remove DAAMS tubes from the protective carriers. Inspect tubes to ensure there are no chipped ends or cracks and frits are clean. Do not use damaged tubes.

2. Write DAAMS tube numbers on upper right hand corner of the sample tag. **NOTE:** When using dual tubes the lowest numbered tube is listed first, with the second tube being listed below the first (See Figure A1). The lowest numbered DAAMS tube will be analyzed by the analyst/operators, first, once the sampled is received.

3. Connect the downstream end of the tygon tubing harness to an air monitoring pump.

4. Connect the GLASS WOOL side of the DAAMS tube to the Gemini Dual Port Sampler (Gemini). Two DAAMS tubes will be used concurrently during the monitoring procedure. The analysis of the DAAMS tube during desorption is a one-shot occurrence. If the desorbed sample is not analyzed as anticipated, the sample cannot be recovered. Therefore, a second tube is used as a backup or for confirmation.

5. Attach a Gemini to the sampling pump.

6. Using a calibrated flowmeter, adjust the flows through the DAAMS tubes by adjusting the set screws on the Gemini to the required rates. Take three (3) readings with the calibrator. If the third reading is within 10 percent of the first two readings record the flow rates on the sample tag as indicated in Figure A1. Flow rates for specific sampling procedures are shown in Table 1.

7. Insert frit end of DAAMS tube through all layers of wrapping material and clear of obstructions or liquid submersion. **Do not insert tube into liquid or soils. if liquid is drawn onto tube, stop the sample, get new tubes and start over.**

8. Turn on the pump to start the sample and write the starting time on the field tag.

Monitoring with DAAMS Tubes

1. Periodically check tubes to ensure connections and flow rates are stable. The amount of time for Monitoring will depend on the type of monitoring conducted (See Table 1). Perform any maintenance, repair and cleaning as required. Maintain the worksite, including the interior of the RTAP, to ensure that all surfaces are clean and dirt/dust free.

2. Before disconnecting the DAAMS tubes samples from the tygon harness:

   (a) Write the time the sample finished on the field tag

   (b) Verify that the DAAMS tube numbers are written on the upper-right hand corner of the sample tag

   (c) Verify that the DAAMS tube numbers match the numbers written on the sample tag

   (d) Verify that the identification number for the sample is written on the sample tag and the actual sample (use permanent marker when marking the item being sampled). For personnel monitoring the last 4 digits of their SSN is used for ID.

   (e) Take three readings using a calibrated flowmeter for each DAAMS tube used during the sampling process and record the flows on the field tag. **DO NOT make any adjustment to the flow rates.**

3. Remove the DAAMS tube from the Gemini and place the frit end into the protective carrier first. Replace the cap.

4. Log samples into the Tag program and record flow information onb the flow sheets. Technicians will annotate any sample discrepancies on the scratch log and any flow discrepancies in the flow sheet. Verify all information is correct and samples are properly identified prior to the analysis.

5. Take samples to the RTAP where the analyst/operator will verify receipt and annotate the scratchlog. Any discrepancies during the analysis will be recorded, by the analyst/operator on the data sheet. These comments shall be added to the comment section of the database program.

6. All data will be collected on the computer in the RTAP, downloaded and added to the Monitoring Branch database at the end of each month.

7. Record the following required information in the appropriate location on the scratchlog, the personnel roster or the flow log.

   Scratch log
   (a) Location
   (b) Sample identification number

(c) Date of sample
(d) Agent(s) being tested for
(e) Type of sample (Background, SOP, TAPC1, etc.)
(f) Time ON and OFF for samples
(g) Point of contact and extension number
(h) Chain of custody signatures, date & time

Personnel Roster
(a) Sample identification number
(b) Date of sample
(c) Agent(s) being tested for
(d) SOP number(s)
(e) Point of contract and extension number
(f) Names of personnel present during operation and SSN
(g) Times (in and out) personnel were present during operations
(h) signature of technicians setting up SOP

Flow Record
(a) Location
(b) Sample identification number
(c) DAAMS tube number (lowest number listed first)
(d) Flow rates for all tubes prior to sample being run
(e) Flow rates for all tubes at conclusion on sample run
omments on any discrepancies concerning tube flows (i.e. tubes contaminated with dirt/liquid, tubes broken)

8. One QP (quality plant) sample per every 20 samples will be collected to ensure that no tampering or sampling anomalies occur. A QP is a sample spiked with a known concentration of analyte and analyzed with the field samples. The results are used to validate the performance of the system. Record standard usage on the agent usage record (Attachment 1). Record QP results on the Monitoring Data Record (Attachment 2).

9. Sampling tags are generated from a PC database program. The tags are attached to the carrier of the DAAMS tube and removed by the analyst during the analysis and affixed to the chromatogram. Tube numbers are written on tag for each sample prior to the analysis.

10. The analytical results, which are on the chromatogram printout in nanograms, are filled out on the data analysis sheet and entered into the tag program database by the analyst/operator.

11. Notify the site safety personnel of any result above the 8-hour time weighted average (TWA) airborne Exposure Level.

DAAMS Tubes sampling with the RTAP

1. Remain in standby mode until samples are received. Per Monitoring Branch QC Plan, for every 10 DAAMS samples, you must run a 4 µl QL challenge and challenge the instrument again at the end of the day after the last sample has been run. Record standard usage on the agent usage record (Attachment 1). Record QL results on the Monitoring Data Record (Attachment 2).

Headspace Monitoring for Soil Samples using the RTAP

---

1 Toxicological Agent Protective Clothing.

1. Contractor delivers soil sample to monitoring personnel.

2. Place up to six samples in a sample box heated to 90° ± 10 degrees Fahrenheit. Open bags and remove sample jar lids. Close sample box lid and allow samples to equilibrate for 15 minutes.

3. Connect MINICAMS probe to sample port of the heated sample box. Run two complete cycles on the MINICAMS.

   a. If MINICAMS reading is below the AEL (clear), go to step 16.

   b. If MINICAMS reading is above the AEL (hot) for agent, go to step 4.

4. Don Mask and Gloves.

5. Open sample box and replace lids on sample containers.

6. Allow samples to re-equilibrate for 15 minutes.

7. Connect MINICAMS to sample port of heated sample box until a clear reading is obtained on the MINICAMS.

8. Don mask and gloves, open lid of sample box. Samples will be monitored one at a time.

9. Remove lid from sample container. Insert MINICAMS probe. Run one cycle on the MINICAMS. Close the sample jar and repeat this procedure on the next sample. All samples must be monitored to assure the hot samples are located. Segregate the samples giving a hot response. If a hot sample cannot be identified, go to step 11.

10. Collect DAAMS tubes on the hot samples. Collect tubes at 500 milliliters per minute for 30 minutes. Give tubes to the monitoring technician for analysis.

11. Place split samples in the heated sample box.

12. Allow samples to re-equilibrate for 15 minutes.

13. Connect MINICAMS to sample port of heated sample box until a clear reading is obtained on the MINICAMS.

14. Don mask and gloves, open lid of sample box. Samples will be monitored on at a time.

15. Remove lid from sample container. Insert MINICAMS probe. Run one cycle on the MINICAMS. Close the sample jar and repeat this procedure on the next sample. All samples must be monitored to assure the hot samples are located. Segregate the samples giving a hot response.

16. Give clear samples to the monitoring technician for proper disposition.

Site Shutdown:

1. Collect all perimeter and personnel monitoring samples. Record the flows as required. Give all samples, tags and data sheets to the RTAP operator.

2. Ensure that there is sufficient gas in the RTAP for the next day's operation. Refuel the vehicle if necessary. Put all gas receipts in the vehicle maintenance log. Write the mileage (odometer reading) on the gas receipt. Use only low grade unleaded when refueling the RTAP.

3. Complete the final RTAP challenge of the day. Record standard usage on the agent usage record (Attachment 1). Record challenge results on the Monitoring Data Record (Attachment 2).

4. If shore power is not required, go on to the Final Checks. If shore power is required:

   (a) Turn off extraneous utilities, i.e. heated sample lines, overhead air vent, vacuum pump, hood, air conditioners/ heaters, computer monitors and in this case GC ovens. Leave appropriate utilities and instruments on.

   (b) Make sure that the system is BELOW 10 amps on the master power control panel box BEFORE the vehicle is plugged into shore power.

5. Conduct Final Checks:

   (a) Turn GC oven back on.

   (b) Adjust internal RTAP ambient temperature in relation to outside temperature (if it's hot outside, turn on AC; if it's cold, turn on heat).

   (c) Collect and store all perimeter stands and electrical cords.

   (d) Ensure that the standards are recapped and placed in the freezer.

   (e) Ensure that the agent log (Attachment 1) is completed for the day.

   (f) Ensure that the all Monitoring Data (Attachment 2) are completed and file the chromatograms for the day in the latest binder.

   (g) File scratch logs and data sheets in the appropriate binders

   (h) Set up for the next day:

      (1) Set up perimeter and personnel pumps. Make sure pumps/calibrators are charging.
      (2) Prepare DAAMS tubes sets and field tags

      (3) Condition used DAAMS tubes

   (i) Collect all trash and dispose of in appropriate containers

   (j) Make sure that all doors on the vehicle are locked (including the cab). Lock all cabinets and drawers in the RTAP.

   (k) Make sure that the cellular phone is set on charge.

   (l) Fill printer trays

   (m) Make sure that all windows are closed and locked.

   (n) Make sure that all vacuum pumps are off.

NOTE: All calibration standards must be decontaminated before the RTAP leaves the site at the end of the operation.

Attachment 1

CSM CUSTODIAL STOCK AND USAGE RECORD

Container No. _____ CSM Type: _____

Document #: SCBRD-ODC-O-DG-_____

Lot #: _____

Room No._____ Container Vol. (mL): _____

Date	Name of User	Balance Issued (mL)	Usage (mL)	Balance Returned (mL)	Site	Signature of Issuer

Attachment 2

RTAP QP DATA SHEET

RTAP MONITOR DATA. TURN IN WEEKLY OR UPON RETURN FROM LOCATION.

P1/P2/P3=1TWA +/- 25% GC Serial Number_____

Location_____ Monitor Number_____

Agent_____STD_____ug/ml Vial Number: _____

(FC=Found Concentration) FF=Fast Flow QP/ HSL= Heated Sample Line

(CA=Corrective Action)

DATE	INJ ul	AGENT	P1/ F1 FC	P2/ F2 FC	CA OR CAL	P3 FC	OPER INITIALS	FFHSL	COMMENTS
	4ul								
	4ul								
	4ul								
	4ul								
	4ul								
	4ul								
	4ul								
	4ul								
	4ul								
	4ul								
	4ul								
	4ul								
	4ul								
	4ul								
	4ul								
	4ul								
	4ul								

Comments:

PAGE LEFT BLANK INTENTIONALLY

APPENDIX B

OPERATION MAINTENANCE PROCEDURES

FOR

MINICAMS MOUNTED IN A MOBILE VEHICLE

Internal Operating Procedure: Operations Directorate

Monitoring Branch

Title: Operation and Maintenance Procedures for MINICAMS Mounted in a Mobile Vehicle

Division: Chemical Operations

Branch: Monitoring Branch

Building/Area: E3344 and other areas

This internal operating procedure covers operations, methods and procedures of a general nature not covered by a standing operating procedure. This procedure will be effective until rescinded or superseded.

Changes to this procedure will be accomplished by submission of revisions or amendments for approval.

Submitted by: Approved by:

Teresa Roseberry

F. G. Lattin
Chief, Monitoring Branch

Date: December 2, 1998

IOP Number: MT-16

Revision Number: 1

Prepared by: Teresa Roseberry
X8517

Approved by: F. G. Lattin
X4479

Title: Operation and Maintenance Procedures for MINICAMS Mounted in a Mobile Vehicle

Operator's Statement: I have read, or have had read to me the procedures in this IOP. I, by my signature below, indicate that I thoroughly understand and agree to abide by these instructions.

Signature	Date	Signature	Date

_____ _____

_____ _____

_____ _____

Supervisor's Statement: I have personally reviewed this IOP and, to the best of my knowledge, believe that the information listed herein is correct.

Supervisor: _____ Date: _____
F. G. Lattin

OPERATION AND MAINTENANCE PROCEDURES FOR MINICAMS MOUNTED IN A MOBILE VEHICLE

Real-Time Monitoring.

The MINICAMS system is currently installed in a specially designed pickup truck or RTAP and it used for real time monitoring at various sites throughout the Continental United States.

MINICAMS Monitoring Concept.

The MINICAMS provides workers involved in remediation operations with real time monitoring for the presence of airborne chemical warfare material in the workplace. Each system is calibrated and challenged at the beginning of each operational day. Continuous monitoring is achieved through the use of a heated sampling line. The sample is drawn through the line into the MINICAMS unit, which desorbs and analyzes the sample during the two-minute cycle time. The data, collected from each MINICAMS, are stored on a floppy disk and/or on a hard copy printout. This serves as a historical record of (no) agent release.

Definition of the Presence of Chemical Agent.

During mobile operations, chemical agent is defined as present if detected by the MINICAMS in a concentration greater than or equal to the Time Weighted Average* (TWA) level for three consecutive cycles.

A member of the monitoring team monitors the performance of the MINICAMS on a daily basis. The MINICAMS is challenged each workday using a certified standard for the agent(s) under test to assure that the MINICAMS is operating correctly

Control Samples.

A MINICAMS sample is defined as the volume of air that is sampled during one automatic cycle of the instrument. A 4 ul challenge of standard dilute chemical agent see (Table No 3, paragraph 4.21, of the Monitoring Branch QC Plan) is injected into the end of the heated sampling line during the sampling period of the MINICAMS cycle. MINICAMS in the VX mode will have injections made onto the fluoride conversion pad. MINICAMS in the L mode will have injections made into the sample probe.

A record of the test date, time, MINICAMS result and the operator's initials will be maintained for each sample line challenge on MBFORM-4 attached to this IOP. Flow rate checks will be recorded in the Comment section of the form. This record will be maintained with the MINICAMS in a safe and secure location that is easily accessible. The data are transported back to the Monitoring Branch for final documentation review and storage.

Hard Copy Printout.

All challenges of chemical agent monitors will be recorded on the hard copy printout of the operating parameters after each calibration and challenge. The same information for all challenges during operations which require more than one daily agent challenge will be printed out on hard copy. The data are also stored on the hard drive of the MINI LINK computer and are archived for subsequent storage.

Operating parameters, standard concentration, and calibration data is printed out on a hard copy.

---

* The terms Time Weighted Average and Airborne Exposure Limit (AEL) can be used interchangeably.
TWA is used in this document to be consistent with the MINICAMS's software.

Minimum Preventive Maintenance Procedures.

When challenging an instrument:

a. Verify that the unit is in the correct agent and concentration mode.

b. Verify that the unit is in the run (not calibrate) mode.

c. Verify that the recorder power switch is on (if applicable).

d. Verify that the alarm lamp, and horn come on when the MINICAMS is challenged.

e. Verify that no error message appears on the display.

f. Verify that each compressed-gas cylinder contains at least 100 psig. If not, change the cylinder. If monitoring for XL, verify that the EDT is at 30 psi.

g. Check the amount of printer paper remaining. Replenish, if necessary.

h. Heated sample lines used for Lewisite (XL) monitoring, require rinsing with ~300mls of alcohol to eliminate XL carryover after each 1 or 2 weeks of operation, or as required to keep the instrument in control.

As Needed:

a. Replace the Pre-Concentrator Tube (PCT) weekly.

b. Check the external gas lines and fittings for leaks.

c. Measure the sample flow through the PCT before deployment and daily at the sampling site after calibration. It should be correct for the sampling application. Adjust the flow rate if necessary. Flow rates will be recorded on the Comments section of QC form (MBFORM-4 A) attached.

CALIBRATION PROCEDURE FOR VX, GB AND GD USING THE FPD

PRIOR TO BEGINNING OF EACH WORK WEEK, GET A NEW CALIBRATION STANDARD FROM THE LABORATORY OR THE RTAP OPERATOR IF IN THE FIELD.

NOTE: RECORD AGENT USAGE ON MBFORM-28 AND TURN IN FOR DECON AT THE END OF THE WEEK.

1. Check MINICAMS operational parameters for errors. If the MINICAMS is programmed for VX operation, replace V-G pad at the end of the sample line situated away from the point of attachment to the MINICAMS.

2. Press the PARAM button until RUN is flashing in the lower left corner, then press the INCR button until CAL is flashing and press ENTER.

3. When the word INJECT appears on the display screen, perform two injections, 4 ul of the 10 minute COMBO standard and 4 ul of the 10 minute VX standard onto the V-G filter pad at the end of the heated sample line when the MINICAMS display screen reads INJECT.

4. During the Purge cycle, press F6 to label this chromatogram as a calibration and enter the operator's initials.

5. After the printer completes the print out, write the found concentrations under the CAL column on the individual QC logs. Press ENTER from the main screen. (This action will normalize the found concentrations to 1.00 on the MINICAMS screen and the printer will print as calibration.)

6. Press the PARAM button on the MINICAMS until CAL is flashing on the lower left of the screen, press INCR button until RUN is flashing and then press ENTER.

7. Perform another 4 ul injection of the COMBO standard and a 4 ul injection of VX onto the V-G pad when the screen reads INJECT.

8. During the Purge cycle, press F6 to label this chromatogram as a challenge and enter the operator's initials.

9. An audible alarm will sound if a concentration greater than 0.80 TWA is detected for any of the selected agents. Press the ENTER button on the MINICAMS to silence this alarm horn. (The alarm light will continue to flash until the concentration falls below 0.80 TWA.)

10. Press the F4 key and print out the chromatogram screen. Next, press the Print key on the MINICAMS to print out the parameters.

11. Record each found concentration on the QC log under the P1/F1 column. Each of the concentrations must be within 0.75-1.25 TWA. If not, deselect any agents, which passed the first challenge, and repeat steps 9 through 12 above and record data under the P2/F2 columns.

NOTE: To deselect an agent, press the PAGE button 4 times until you are on the agent selection screen. Press the PARAM button until the asterisk is blinking beside the agent to be deselected. Press the ENTER button and the asterisk will disappear. At this time, this agent has been deselected.

12. If the second challenge is still not within the acceptable limits, perform and document a corrective action, repeat steps 3 through 12 again and record data under Cal and the P3/F3 columns.

NOTE: If the third challenge is still out of range, this instrument must either be removed from service or a corrective action must be performed and documented on the QC log. After the corrective action has been

taken, the instrument must be recalibrated and the data recorded on the next line. If the instrument is replaced, a new QC log must be started and calibrations and challenges must be performed.

13. After acceptable challenges have been performed, reselect any deselected agents by paging to the agent selection screen (See note under paragraph 11), press PARAM until the asterisk blinks beside the agent to reselect and press the ENTER button again. Press ENTER again and the asterisk will reappear and the agent has been reselected. Page back to the main screen.

14. Once all agents have been reselected, page back to the main screen and press PRINT to print out operating parameters.

15. Attach the paperhanger to the top of the printer paper.

16. Make sure the operator's initials, calibration, and challenge data are recorded properly on the QC log.

NOTE: The MINICAMS operator shall start a new QC data sheet, MBFORM-4A on the first day of each month. The data (QC data sheets) for the previous month shall be collected and turned in to the MINICAMS group for review and filing.

CALIBRATION PROCEDURE FOR HD USING THE FPD

PRIOR TO BEGINNING OF EACH WORKWEEK, GET A NEW CALIBRATION STANDARD FROM THE LABORATORY OR THE RTAP OPERATOR IF IN THE FIELD.

NOTE: RECORD AGENT USAGE ON MBFORM-28 AND TURN IN FOR DECON AT THE END OF THE WEEK.

1. Check MINICAMS operational parameters for errors.

2. Press the PARAM button until RUN is flashing in the lower left corner, then press the INCR button until CAL is flashing and press ENTER.

3. When the word INJECT appears on the display screen, inject, 4 ul of the 10 minute COMBO standard at the end of the heated sample line not attached to the MIICAMS when the MINICAMS display screen reads INJECT.

4. During the Purge cycle, press F6 to label this chromatogram as a calibration and enter the operator's initials.

5. After the printer completes the print out, write the found concentrations under the CAL column on the individual QC logs. Press ENTER from the main screen. (This action will normalize the found concentrations to 1.00 on the MINICAMS screen and the printer will print as calibration.)

6. Press the PARAM button on the MINICAMS until CAL is flashing on the lower left of the screen, press INCR button until RUN is flashing and then press ENTER.

7. Perform another 4 ul injection of the COMBO standard when the screen reads INJECT.

8. During the Purge cycle, press F6 to label this chromatogram as a challenge and enter the operator's initials.

9. An audible alarm will sound if a concentration greater than 0.80 TWA is detected for HD. Press the ENTER button on the MINICAMS to silence this alarm horn. (The alarm light will continue to flash until the concentration falls below 0.80 TWA.)

10. Press the F4 key and print out the chromatogram screen. Next, press the Print key on the MINICAMS to print out the parameters.

11. Record the found concentration on the QC log under the P1/F1 column. The concentration must be within 0.75-1.25 TWA. If not, repeat steps 7 through 10 above and record data under the P2/F2 columns.

12. If the second challenge is still not within the acceptable limits, perform and document a corrective action, repeat steps 2 through 11 again and record data under Cal and the P3/F3 columns.

NOTE: If the third challenge is still out of range, this instrument must either be removed from service or a corrective action must be performed and documented on the QC log. After the corrective action has been taken, the instrument must be recalibrated and the data recorded on the next line. If the instrument is replaced, a new QC log must be started and calibrations and challenges must be performed.

13. Page back to the main screen and press PRINT to print out operating parameters.

14. Attach the paperhanger to the top of the printer paper.

15. Make sure the operator's initials, calibration, and challenge data are recorded properly on the QC log.

NOTE: The MINICAMS operator shall start a new QC data sheet, MBFORM-4A on the first day of each month. The data (QC data sheets) for the previous month shall be collected and turned in to the MINICAMS group for review and filing.

CALIBRATION PROCEDURE FOR HD/XL USING THE XSD DETECTOR

PRIOR TO BEGINNING OF EACH WORKWEEK, GET A NEW CALIBRATION STANDARD FROM THE LABORATORY OR THE RTAP OPERATOR IF IN THE FIELD.

NOTE: RECORD AGENT USAGE ON MBFORM-28 AND TURN IN FOR DECON AT THE END OF THE WEEK.

1. Check MINICAMS operational parameters for errors, if none, perform a wakeup challenge of 4 ul of 2.262 ng/ul XL and a 4 ul challenge of 10 min. Combo into the end of the sample line that is not attached to the MINICAMS at time 245 on the MINICAMS screen.

2. Wait for printer to print, but do not record these data.

3. From the main screen, press the PARAM button until RUN is flashing in the lower left corner, press the INCR button until Cal is flashing and then press ENTER.

4. Perform another injection of 4 ul of the 10 min. COMBO standard and 4 ul of the XL standard into the probe end when the light on the probe controller box illuminates. The illumination occurs at approximately 245 seconds.

5. Allow the printer to print again and write the found concentration(s) on the individual QC logs under the CAL column. Press ENTER from the main screen. (This action will normalize the found concentrations to 1.00 on the MINICAMS screen and the printer will print as calibration.)

6. Press the F6 key on the MINILINK computer and label the chromatogram as a calibration and enter the operator's initials.

7. Press the PARAM button until CAL is flashing on the lower left of the screen, press INCR button until RUN is flashing and then press ENTER.

8. Perform another 4ul injection of the Combo and XL standards into the probe end when the light on the probe controller box illuminates. The illumination occurs at approximately 245 seconds.

9. When the challenge concentration(s) is printed out, an audible alarm will sound if any of the concentrations are greater than 0.20 TWA. Press the ENTER button to silence this alarm horn. (The alarm light will continue to flash until all of the concentrations fall below 0.20 TWA)

10. Use the F6 key to label this chromatogram as a challenge and enter operator's initials.

11. Press the F4 key and print out the chromatograms. Next, press the Print button on the MINICAMS and print Parameters.

12. Record the found concentration(s) on the QC logs under the P1/F1 column. The concentrations must be within 0.75-1.25 TWA. If one of the agents is within this limit, deselect the passing agent by pressing the PAGE button 4 times until you are on the agent selection page. Press the PARAM button until the asterisk blinks beside the agent to be deselected and press ENTER. Repeat steps 8 through 12 above and record data under the P2/F2 columns.

13. If the second challenge is still not within the acceptable limits, perform and document corrective action, repeat steps 3 through 12 again and record data under Cal column.

NOTE: If a third challenge is still out of range, this instrument must either be removed from service or a corrective action must be performed and documented on the QC log. At that time re-calibration can be performed and the data recorded on the next line. If the instrument is replaced, a new QC log must be started and calibrations and challenges must be performed.

14. After an acceptable challenge has been performed, reselect all agents by again paging to the agent selection screen (see step 10) and press the PARAM button until the asterisk is flashing next to the agent to be reselected and press ENTER. The asterisk will be replaced with XSD. Press ENTER again and the asterisk will reappear and the agent has been reselected. Page back to the main screen.

15. Initial the printout and attach the paper hanger to the top of the printer paper.

16. Make sure the operator initials and calibration and challenge data are recorded properly on the QC logs.

17. Archive MINILINK data every Friday (or last operational day of the week) in accordance with the archive procedure.

NOTE: Heated sample line shall be rinsed with ~300mls of alcohol every 1-2 weeks, as necessary, to eliminate the XL carryover.

NOTE: The MINICAMS operator shall start a new QC data sheet, MBFORM-4A on the first day of each month. The data (QC data sheets) for the previous month shall be collected and turned in to the MINICAMS group for review and filing.

ARCHIVE PROCEDURE FOR MINILINK SYSTEM.

NOTE: USE **FORMATTED** 3.5 in DISKETTES.

NOTE: This procedure augments the CMS Operators Manual and may be used with MINILINK system.

MINILINK IS SET ON THE VISUAL STRIP CHART SCREEN DURING NORMAL OPERATIONS.

ARCHIVE DATA WHEN ARCHIVE IS FLASHING IN THE UPPER RIGHT CORNER OF COMPUTER SCREEN.

When ARCHIVE is flashing in the upper right corner of the computer screen, the hard drive is approaching 1000 stored chromatograms. If the data is not archived, the hard drive becomes full and the MINILINK automatically starts overwriting previously stored data. Once overwritten the data is impossible to retrieve.

TO ARCHIVE DATA:

1. Go to main menu and select #7 Archive Data.

2. This screen has prompts to remind the operator to use formatted disks, date the disks with proper date (date of data to be archived, which will be either the installation date noted on the challenge sheets or the last date the archive procedure was performed. (See challenge sheets or the last date recorded on the disks which are stored at every monitoring position).

3. Label the disk with the location/position, start and end date, and disk number. E.g. BRA-1, Data from 8/15/98 to 8/19/98, Disk #1. NOTE: It usually requires 4-6 disks to complete archive procedure.

4. Press ESCAPE on upper left corner of keyboard. At C:\ MINILINK > prompt, type ARC (space) 081598 per example above, and press ENTER

5. Type y and press ENTER to archive data. The bottom line on the screen will read "Do you want to delete files at end of archive procedure?" Type y unless you want more than 1 copy of the data. The data will then be deleted from the hard drive at the end of the archive procedure to make room for additional data and the flashing ARCHIVE will be eliminated from the strip chart screen.

6. The operator will be prompted to insert a disk into the computer and press any key to begin the archive procedure.

7. As each disk is filled, the operator will be prompted to insert disk #2, #3 etc. and press any key to start. Repeat this procedure until all data is copied to the diskettes. The program prompts the operator for each operation.

8. When all files are copied, the program will read "All copies filed" and the C:\MINILINK> prompt will reappear. Type MLINK to return to the main menu.

9. Document that the data has been successfully archived by writing "Data arced" in the comment section of the QC Data sheet and store all disks until the disk holder is full.

10. Replace full diskette container with a new container and return the old data filled container to the data storage area.

11. Each container will be labeled with the position name and number and given to 40 year data base manager.

NOTE: For additional information on archiving data, refer to the CMS MINILINK Operators Manual.

IF PROBLEMS OCCUR, REFER TO THE FOLLOWING:

If a problem occurs during the archiving process, a message will appear with choices for the operator, e.g. "Reading on drive B—Abort, Retry, Ignore etc. Press "R" for retry. If message still appears, remove disk and add the letter "A" behind the disk number and insert a new disk and press enter. If the message appears again, Press "I" each time the message appears until the program gets past the bad sector. All data will be stored on the disk. Be sure and label the disk with "B" behind the disk number. Example: BRA-1, Data from 8/15/98 to 8/19/98, Disk 1A, Then the replacement disk will have the same data except the label will be Disk 1B.

HEADSPACE MONITORING FOR ENVIRONMENTAL SAMPLES

1. Soil samples are delivered by contractor to monitoring personnel.

2. Place up to six (6) samples in a sample box heated to 90° ± 10 degrees Fahrenheit. Open bags and remove sample jar lids, close sample box lid and allow samples to equilibrate for 15 minutes.

3. Connect MINICAMS probe to sample port of the heated sample box and run two complete cycles on the MINICMS.
   a. If MINICAMS reading is below the AEL (clear for agent), go to step 16.

   b. If MINICAMS reading is above the AEL (hot for agent), go to step 4.

4. Don mask and gloves.

5. Open sample box and replace lids on sample containers.

6. Allow samples to re-equilibrate for 15 minutes.

7. Connect MINICAMS to sample port of heated sample box until a clear reading is obtained on the MINICAMS.

8. Don mask and gloves, open lid of sample box. Samples will be monitored one at a time.

9. Remove lid from sample container. Insert MINICAMS probe and run one cycle on the MINICAMS. Close the sample jar and repeat this procedure for each sample. When all samples have been monitored, segregate the samples giving a "Hot" response. If no "Hot" samples are identified, go to step 11.

10. Collect DAAMS tubes on the hot samples. Collect tubes at 500 milliliters per minute for 30 minutes. Give tubes to the monitoring technician for analysis.

11. Place the remaining split samples in the heated sample box.

12. Allow samples to re-equilibrate for 15 minutes.

13. Connect MINICAMS to sample port of heated sample box until a clear reading is obtained on the MINICAMS. If samples will not clear, go to step 14.

14. Don mask and gloves, open lid of sample box. Samples will be monitored one at a time.

15. Remove lid from sample container. Insert MINICAMS probe and run one cycle on the MINICAMS. Close the sample jar and repeat this procedure for each sample. When all samples have been monitored, segregate the samples giving a Hot response.

16. Give clear samples to the monitoring technician for proper disposition.

CSM CUSTODIAL STOCK AND USAGE RECORD

Container No. _____ CSM Type: _____

Document #: SCBRD-ODC-O-DG-_____

Lot #: _____

Room No._____ Container Vol. (mL): _____

Date	Name of User	Balance Issued (mL)	Usage (mL)	Balance Returned (mL)	Lab Page	Signature of Issuer

Sample Flow Rate: 1000 mL/min
Location:_____
Target Concentration:_1__ TWA
MINICAMS Serial No.:_____
Alarm Setpoint: 0.80 TWA
(FC=Found Concentration)
(CA=Corrective Action)

Reviewed By:_____
Agent Std:_____ Vial No. _____

Agent: HD VX GB GD
PMT Voltage: _____VDC

DATE	INJ ul	C A L	P1/ F1 FC	P2/ F2 FC	CA or CAL	P3 FC	OPER INITLS	COMMENTS
	4l							
	4ul							
	4ul							
	4ul							
	4ul							
	4ul							
	4ul							
	4ul							
	4ul							
	4ul							
	4ul							
	4ul							
	4ul							
	4ul							

APPENDIX C

OPERATION AND MAINTENANCE PROCEDURES

FOR

REAL TIME MONITORING SUPPORT

DURING

ON-SITE OPERATIONS

APPENDIX B

OPERATION AND MAINTENANCE PROCEDURES

FOR

REAL TIME MONITORING SUPPORT DURING

ON-SITE OPERATIONS

Internal Operating Procedure: Operations Directorate Monitoring Branch

Title: Operation and Maintenance Procedures for Real Time Monitoring Support During On-Site Operations.

Division: Chemical Operations

Branch: Monitoring Branch

Building/Area: Areas utilizing real time monitoring support.

This internal operating procedure covers operations, methods and procedures of a general nature not covered by a standing operating procedure. This procedure will be effective until rescinded or superseded.

Changes to this procedure will be accomplished by submission of revisions or amendments for approval.

Submitted by:

Kelly Maguire

Teresa Roseberry

Approved by:

F. G. Lattin
Chief, Monitoring Branch

Date: October 27, 1998

IOP Number: MT-17

Revision Number: 1

Prepared by: Teresa Roseberry, X8517
Kelly Maguire, X8428

Approved by: F. G. Lattin
X4479

Title: Operation and Maintenance Procedures for Real Time Monitoring Support During On-Site Operations.

Operator's Statement: I have read, or have had read to me the procedures in this IOP. I, by my signature below, indicate that I thoroughly understand and agree to abide by these instructions.

Signature	Date	Signature	Date

Supervisor's Statement: I have personally reviewed this IOP and, to the best of my knowledge, believe that the information listed herein is correct.

Supervisor: _____ **Date:** _____
F. G. Lattin

Operation and Maintenance Procedures for Real Time Monitoring Support During On-Site Operations.

1.0 General Information.

1.1 Real Time Analytical Platform (RTAP).

The Real Time Analytical Platform (RTAP) is a self-contained mobile platform that can be moved from site to site. It is a mobile, low level monitor system designed to respond to Time Weighted Average (TWA) values for nerve, mustard or Lewisite agent in less than 10 minutes with alarm capability. The RTAP contains a MINICAMS or Gas Chromatograph system or both systems. These systems are continuous environmental monitoring systems.

1.2 GAS CHROMATOGRAPH

The gas chromatograph (GC) collects compounds on a solid sorbent trap, thermally desorbs them into a capillary gas chromatography column, and detects the compounds with a simultaneous phosphorous and sulfur, dual headed flame photometric detector (FPD) or an electron capture detector (ECD). The GC can detect GB, GD, VX, XL or HD at either IDLH, TWA, or ASC levels. Because of the low volatility of VX, a fluorinating filter must be used for the detection of VX. The filter converts VX to a more volatile compound (the G-analog of VX), which can be quantitatively transferred through the sampling and analysis system.

1.3 MINICAMS

The MINICAMS system can be installed in a truck or RTAP and is used for real time monitoring at various sites throughout the Continental United States. The MINICAMS can detect GB, GD, VX, XL or HD at IDLH, TWA, or ASC levels. It is an automated gas chromatograph that first collects agent on a solid sorbent and then thermally desorbs the agent into a separation column for analysis. A flame-photometric detector (which respond to compounds containing either phosphorus (GB, GD and VX) or sulfur (HD)) or a halogen selective detector (which respond to compounds containing chlorine (L and HD)) detects the components eluting from the column. Because of the low volatility of VX, a fluorinating filter must be used for the detection of VX. The filter converts VX to a more volatile compound (the G-analog of VX), which can be quantitatively transferred through the sampling and analysis system. Lewisite is derivatized with EDT at the sample collection point. The derivatized compound (XL) is thermally stable and capable of transfer through the heated sample line to the MINICAMS for subsequent analysis. A direct readout, in units of the hazard level, is given on the front panel of the instrument. The MINICAMS requires environmental protection from extreme heat, cold, and dust to function properly. The MINICAMS can detect agent in ambient air. The MINICAMS does not sample continuously because sampling is stopped during the thermal-desorption step. The MINICAMS sample during 80 to 85 percent of the total cycle time for TWA and ASC monitoring and 25 percent of the 2-min cycle time for IDLH monitoring. Advanced automatic agent monitoring instrumentation, such as the MINICAMS, is provided with internal diagnostics to determine the operability of the system. The MINICAMS software checks various parameters (e.g., temperatures, flow rates, etc.) to determine whether these parameters are outside preset limits. If outside these limits, an error message appears on the front panel, a yellow light flashes, and a malfunction status signal is sent to the control center.

2.0 Operational Procedures.

2.1 Real Time Analytical Platform (RTAP) Daily Operations.

2.1.1 For the RTAP, the following steps shall be taken during each operational day:

2.1.1.1 Check gasoline generators used to supply electrical power, for oil and fuel level.

2.1.1.2. Uncoil and place the heated sampling line (HSL) at the monitoring site. Verify the line is connected to the vacuum interface and check the vacuum interface filter to ensure there is no dirt or obstruction that could affect the proper operation of the Dynatherm unit.

2.1.1.3. To heat the HSL, insert the three pronged plug of the HSL into the portable generator or if the RTAP is still on shore power, into an outlet in the RTAP. **If using the RTAP outlet, do not plug in more than one unheated sample line at a time. This will cause a circuit breaker to overload.** Each sample line must be on a separate circuit. Depending on length, when a line is first plugged in, it will draw 10-15 amps to heat up, then level out around 7 amps. Each outlet can only hold a max of 15 amps. After switching to generator power, *two already heated* sample lines can be accommodated by one RTAP outlet.

2.1.1.4. For running off internal generators, initiate the following:

2.1.1.4.1 Start the supplemental power generators, and let them warm up for about 10 minutes.

2.1.1.4.2 Turn off extraneous utilities, i.e. heated sample lines, overhead air vent, vacuum pump, hood, air conditioners/heaters, computer monitors and, in this case, GC ovens.

2.1.1.4.3 Make sure that the system is **BELOW** 10 amps on the master power control panel **BEFORE** unplugging the vehicle from shore power.

2.1.1.4.4 Unplug the shore power cord from the RTAP's external outlet and turn on the extraneous utilities.

2.1.1.4.6 Depending on the RTAP configuration, plug the heated sample line into the appropriate outlet.

2.2 RTAP Daily Operational Procedures. FOR REAL TIME MONITORING: Before deployment to the operational site, each MINICAMS shall be calibrated and challenged with a QP through the heated sample line. Each GC unit shall be challenged through the HSL. The heated sample line /or shall also be challenged with a QP challenge.

2.2.1 Gas Chromatograph (GC) startup. Check to see if the system is ready, the flame is lit and the ChemStation is in "Ready" status. Create a directory in the ChemStation. To create a directory go into "Run Control" on the main menu screen, and then to "Sample Info" to enter your name, the date, the project, GC serial number, etc. Record any troubleshooting or changes to the GC configuration on the GC Preventive Maintenance Log (MBFORM- 30). Record the flow rate on the appendix sheet of the SOP.(Pre-Op checklist). The minimum acceptable flow rate for operation is 0.7liters per minute.

2.2.2 Run a blank through the instrument by pressing the start button on the Dynatherm (this can be done while the generators warm up). The instrument blank shows the kind of background that may be present in the column and on the tube. . If a peak does appear in the retention time widow for the agent, further blanks may be necessary at the discretion of the operator. When the blank is clear for the analytes of interest, inject a 10uL conditioning shot onto the fast flow tube. If response from the conditioning shot is within expected parameters, challenge the instrument with a 4ul aliquot of standard and record the results on the

2.2.3 Run a blank through the heated sample line by pressing the start button on the Dynatherm (this can be done while the generators warm up). The line blank shows the kind of background that may be present in the line and in the air. If a peak does appear in the retention time widow for the agent, further blanks may be necessary at the discretion of the operator.. When the blank is clear for the analytes of interest, inject a 10uL conditioning shot

through the heated sample line. If response from the conditioning shot is within expected parameters, challenge the line with a 4ul aliquot of standard, and record the results..

2.2.4 To conduct an initial GC challenge, inject through the heated sample line, a 4uL aliquot of the appropriate standard. Record **QP** results on the Monitoring Data Record (MBFORM-5).

2.2.5 If the challenge does not pass, repeat the challenge. If the second challenge fails, troubleshoot by checking the fittings and the vacuum flow filters. Also check to see if the vacuum is on, the vacuum interface filter is clean, the heated sampling lines are hot and the fittings are tight and covered with insulation (if applicable) to ensure the fittings maintain the proper temperature. If a corrective action has been performed, repeat the challenge. Document the corrective action in the GC Maintenance Log. If no corrective action is requied recalibrate IAW the Monitoring Branch Quality Control (QC) Plan,.

2.2.6 If the line challenge passes, the system is ready to begin real time sampling. Record results on the Monitoring Data Record (MBFORM-5).

2.2.7 To calculate TWA in nanograms for the actual conditions:

TWA (in ng) = ***conversion factor** X **sample collection time (in minutes)** X **flow (in liters)**

AGENT	CONVERSION FACTOR
GB	0.1
GD	0.03
VX	0.01
HD	3.0
L	3.0

To relate TWA to the sample, for this example of HD, assume a sampling time of 3 minutes and a flow of 0.9 liters:

TWA (ng) = 3 X 3 min X 0.9 liters
TWA (ng) = 8.1

If a sample result is 36 ng, then:

TWA = 36 ng/8.1 ng
TWA = 4.5

2.2 MINICAMS Daily Operations.

2.2.1 Operational check. Each operational day, the first step in the procedures is to verify that the MINICAMS is operating correctly. The generators should be running and unplugged from shore power.

2.2.2 Check the display screen to ensure that there are no errors. Page through the readouts and verify the preset readings are correct and display the expected response and that major parameters (as recorded in the MINICAMS Parameter Pamphlet) are within correct limits. Appropriate action shall be taken to correct any malfunctions found.

2.2.3 In addition to the daily check of operating parameters made by the operator, software within MINICAMS automatically checks and corrects a number of internal parameters every 0.1-sec. These parameters include the temperature of the solid sorbent during sampling and desorption and the temperatures of the detector and column during analysis.

2.2.4 After completion of the instrument observation, the instrument shall be calibrated and a QP challenge shall be made through the heated sampling line. The results of this QP challenge shall be recorded (see MBFORM-4a, attached) as the first QP challenge of the day. Calibrate the MINICAMS for nerve agents IAW the procedures beginning in paragraph 5.1 and for mustard and Lewisite beginning in paragraph 5.2

2.2.5 The flow rates shall be checked at the beginning of each operational workday using Mass Flow Meter Model FM-360 or equivalent. The flow rate checks will be recorded in the Comments section of MBFORM-4a.

2.2.6 During a challenge or calibration operation, 4 ul aliquot of the appropriate agent(s) standard is injected into the heated sampling line. The concentration of the standard solution shall be such that the injection contains 1.0 ± 10% TWA or IDLH of the agent depending on the hazard level the MINICAMS is programmed to detect.

2.2.7 After calibration is completed, re-challenge the instrument with a QP sample to verify the calibration. If the QP response is not within ± 25% of the target concentration, verify that the instrument is operating correctly and re-challenge the instrument. If acceptable, the unit is in control, if not, it must be re-calibrated. See exception paragraph 4.8.2.3. of the Monitoring Branch QC Plan Calibration information is printed out on the "hard copy" printout from the MINICAMS.

3.0 On-site Monitoring

3.1 Real Time Sampling with the MINICAMS. Once the system is challenged and operating within standards parameters, the MINICAMS continuously collects and analyzes the samples. Data are recorded on MINILINK computers which are integral to the system. *During transit, pump/printers, and EDT tank can be turned off.

3.1.1 Upon arriving at the site, Check all "PARAMS", then again inject a 1 TWA (4µl) QP challenge through the heated sampling line to assure that the monitoring system (MINICAMS plus heated sampling line) is still performing properly.

3.1.2 Site monitoring shall begin when all equipment is performing properly. Inject a 1 TWA (4 µl) challenge every 4 hours and at the end of daily of operations. If the QP challenge after 4 hours fails to meet the 1 TWA +/- 25%, a re-challenge is permitted. If the re-challenge fails, the MINICAMS must be re-calibrated.

3.1.3 If the end of the day challenge fails to meet the TWA +/- 25% requirement, note this on the appropriate QP challenge log (MBFORM-4a). Perform a second challenge and document. An additional re-calibration is not required if the 2nd challenge fails, since RTM operations are complete for the day.

3.1.4 A Real Time Monitoring QP Data Sheet (MBFORM- 4a) will be completed for each agent for each MINICAMS.

3.2 Real Time sampling with the GC. Upon arriving at the site, again inject a 1 TWA (4µl) QP challenge through the heated sampling line to assure that the monitoring system (GC plus heated sampling line and/or MINICAMS plus heated sampling line) is performing properly.

3.2.1 The sampling line must be challenged every four hours, with a 4 µl challenge and again after the last sample at the end of the day. If the end of the day challenge fails to meet the TWA +/- 25% requirement, note this on the appropriate QP challenge log (MBFORM-5). Perform a second challenge and document. An additional calibration and re-challenge is not required since RTM operations are complete for the day. However, if DAAMS tubes are to be run on the GC, it must be properly calibrated prior to further use.

One copy of the new CAL Table & Curve goes on front of GC & One copy goes in data binder.

3.2.2 Record standard usage on the agent usage record (MBFORM-15). Record QP results on the Monitoring Data Record (MBFORM-5).

3.2..3 A Real Time Monitoring Checklist (MBFORM-4a or 5) will be completed for each RTAP and MINICAMS.

4.0 Calibration Procedures.

4.1 MINICAMS Calibration Procedure For VX, GB AND GD. Check MINICAMS operational parameters for errors. Replace V-G pad @ sample line end for VX.

4.1.1 Press the PARAM button until RUN is flashing in the lower left corner, then press the INCR button until CAL is flashing and press ENTER.

4.1.2 Perform two injections, 4 ul of the 10 minute COMBO standard and 4 ul of the 10 minute VX standard onto the V-G filter pad at the end of the heated sample line when the MINICAMS LCD screen reads INJECT.

NOTE: It is safe to perform the injection as late as time 180 secs on the LCD screen.

4.1.3 During the Purge cycle (0-120sec) press F6 and label this chromatogram as a calibration and operator initials.

4.1.4 Allow the printer to print again and write the found concentrations on the individual QC logs under the CAL column. Press ENTERfrom the main screen. (This action will change the found concentrations to 1.00 on the MINICAMS screen and the printer will print as calibration.)

4.1.5 Press the PARAM button on the MINICAMS until CAL is flashing on the lower left of the screen, press INCR button until RUN is flashing and then press ENTER.

4.1.6 Perform another 4 ul injection of the COMBO standard and a 4 ul injection of VX onto the V-G pad when the screen reads INJECT.

4.1.7 During the purge cycle, press F6 and label this chromatogram as a challenge and operator initials.

4.1.8 When these challenge concentrations are printed out, an audible alarm will sound if the concentrations are greater than 0.80 TWA. Press the ENTER button on the MINICAMS to silence this alarm horn. (The alarm light will continue to flash until the concentration falls below 0.80 TWA.)

4.1.9 Press the F4 key and print out the chromatogram screen. Next, press the Print key on the MINICAMS to print out the parameters.

4.1.10 Record each found concentration on the QC log under the P1/F1 column. Each of the concentrations must be within 0.75-1.25 TWA. If not, deselect any agents which did pass the first challenge, and repeat steps 4.1.6 through 4.1.9 above and record data under the CAL and P2/F2 columns.

NOTE: To deselect an agent, press the PAGE button 4 times until you are on the agent selection screen. Press the PARAM button until the asterisk is blinking beside the agent to be deselected. Press the ENTER button and the asterisk will disappear. At this time, this agent has been deselected.

4.1.11 If the second challenge is still not within the acceptable limits, perform and document a corrective action, repeat steps 4.1.3 through 4.1.9 again and record data under Cal and P3/F3 columns.

NOTE: If the third challenge is still out of range, this instrument must either be removed from service or a corrective action must be performed and documented on the QC log. At that time recalibration can be performed and the data recorded on the next line. If the instrument is replaced, a new QC log must be started and calibrations and challenges must be performed.

4.1.12 After acceptable challenges have been performed, reselect any deselected agents by paging to the agent selection screen (See note under 4.1.11), press PARAM until the asterisk blinks beside the agent to reselect and press the ENTER button again. The FPD will be replaced with a 4. Press ENTER again and the asterisk will reappear and the agent has been reselected. Page back to the main screen.

4.1.13 Once all agents have been reselected, page back to the main screen and press PRINT to print out operating parameters.

4.1.14 Initial the printout and attach the paperhanger to the top of the printer paper.

4.1.15 Make sure the operator initials and calibration and challenge data are recorded properly on the QC log.

4.2 MINICAMS Calibration Procedure For HD/XL

4.2.1 Check MINICAMS operational parameters for errors, if none perform a wakeup challenge of 4 µl of 2,262 ng/µl XL and a 4 µl challenge of 10 min. Combo into the end of the sample line at time 245 on the MINICAMS screen.

4.2.2 Wait for printer to print, but do not record these data.

4.2.3 From the main screen, press the PARAM button until RUN is flashing in the lower left corner, press the INCR button until Cal is flashing and then press ENTER.

4.2.4 Perform another injection of 4 µl of the 10 min. COMBO standard and 4 µl of the XL standard into the probe end when the MINICAMS LCD screen reads INJECT.

4.2.5 Allow the printer to print again and write the found concentration (Found Concs.) on the individual QC logs under the CAL column. Press ENTER from the main screen. (This action will change the found concentrations to 1.00 on the MINICAMS screen and the printer will print as calibration.)

4.2.6 Press the F6 key on the MINILINK computer and label the chromatogram as calibration and print the operator's initials.

4.2.7 Press the PARAM button until CAL is flashing on the lower left of the screen, press INCR button until RUN is flashing and then press ENTER.

4.2.8 Perform another 4µl injection of the Combo and XL standards into the probe end when the screen reads INJECT.

4.2.9 When the challenge concentrations are printed out, an audible alarm will sound if any of the concentrations are greater than 0.80 TWA. Press the ENTER button to silence this alarm horn. (The alarm light will continue to flash until all of the concentrations fall below 0.80 TWA)

4.2.10 Use the F6 key to label this chromatogram as a challenge and initial.

4.2.11 Press the F4 key and print out the chromatograms. Next, press the Print button on the MINICAMS and print Parameters.

4.2.12 Record the found concentrations on the QC logs under the P1/F1 column. The concentrations must be within0.75-1.25 TWA. If not all agents are within this limit, deselect the passing agent by pressing the PAGE button 4 times until you are on the agent selection page. Press the PARAM button until the asterisk blinks beside the agent to be deselected and press ENTER. Repeat steps 4.2.6 through 4.2.9 above and record data under the P2/F2 columns.

4.2.13 If the second challenge is still not within the acceptable limits, perform and document corrective action, repeat steps 4.2.6 through 4.2.9 again and record data under Cal column.

4.2.14 Perform a 3rd challenge and record in the P3/F3 column.

NOTE: If a third challenge is still out of range, this instrument must either be removed from service or a corrective action must be performed and documented on the QC log. At that time re-calibration can be performed and the data recorded on the next line. If the instrument is replaced, a new QC log must be started and calibrations and challenges must be performed.

4.2.15 After an acceptable challenge has been performed, reselect all agents by again paging to the agent selection screen (see 4.2.12) and press the PARAM button until the asterisk is flashing next to the agent to be reselected and press ENTER. The asterisk will be replaced with XSD. Press the ENTER button again

and the XSD will be replaced with a 4. Press ENTER again and the asterisk will appear next to the reselected agent.

4.2.16 Initial the printout and attach the paperhanger to the top of the printer paper.

4.2.17 Make sure the operator initials and calibration and challenge data are recorded properly on the QC logs.

4.2.18 Archive MINILINK data every Friday (or last operational day of the week) in accordance with the archive procedure paragraph 5.0.

NOTE: Heated sample line shall be rinsed with alcohol every 1-2 weeks, as necessary, to eliminate the XL carryover.

5.0 Archive Procedure For The MINILINK System

NOTE: USE FORMATTED 3.5 in. DISKETTES.

NOTE: This procedure augments the CMS Operators Manual and may be used with MINILINK system.

5.1 SET MINILINK ON "VISUAL STRIP CHART"
ARCHIVE DATA WHEN "ARCHIVE" IS FLASHING IN THE UPPER RIGHT CORNER OF COMPUTER SCREEN.

5.1.1 When "ARCHIVE" is flashing in the upper right corner of the computer screen, the hard drive is approaching 1000 stored chromatograms. If the data is not archived, the hard drive becomes full; the MINILINK automatically starts dropping previously stored data, which is impossible to retrieve.

5.2 TO ARCHIVE DATA:

5.2.1 Go to main menu and select #7 "archive data".

5.2.2 This screen has prompts to remind the operator to use formatted disks, date the disks with proper date (date of data to be archived, which will be either the installation date noted on the challenge sheets or the last date the archive procedure was performed. (See challenge sheets or the last date recorded on the disks which are stored at every monitoring position).

5.2.3 Label the disk with the location/position, start and end date, and disk number. E.g. BRA-1, Data from 8/15/98 to8/19/98, Disk #1. NOTE: It usually requires 4-6 disks to complete archive procedure.

5.2.4 Press "Escape" on upper left corner of keyboard, At C:\ MINILINK > prompt, type "ARC" (space) 081598 per example above, and press "enter".

5.2.5 Type "y" and press "enter" to archive data. The bottom line on the screen will read "delete files at end of archive procedure? Type "y" unless you want more than 1 copy of the data. The data will then be deleted from the hard drive at the end of the archive procedure to make room for additional data and the flashing "ARCHIVE" will be eliminated from the strip chart screen.

5.2.6 The operator will be prompted to insert a disk into the computer and press any key to begin the archive procedure.
5.2.7 As each disk is filled, the operator will be prompted to insert disk #2, #3 etc. and press any key to start. Repeat this procedure until all data is copied to the diskettes. The program prompts the operator for each operation.

5.2.8 When all files are copied, the program will read "All copies filed" and the C:\MINILINK> prompt will reappear. Type "MLINK" to return to the main menu.

5.2.9 Document "Data Archived" in the comment section of the QC Data sheet and store all disks until the "disk holder" is full.

5.2.10 Replace full diskette container with a new container and return the "old data filled" container to supervisor.

5.2.11 Each container will be labeled with the position name and number and given to "Government Personnel" for inclusion in the 40-year storage area.

NOTE: For additional information on archiving data, refer to the CMS MINILINK Operator Manual.

5.2.12 Record agent usage on the Usage Record (MBFORM-15).

5.2.13 Record standard usage on the agent usage record (MBFORM-15). Record QP results on the Monitoring Data Record (MBFORM-5).

5.2.14 It is essential to sample 2.7 liters of air to obtain a 1 TWA equivalent response on the Gas Chromatograph. If you are unable to obtain a 0.9-liter per minute flow rate, adjusts the sample time so that the flow rate times the sample time equal 2.7 liters. Record standard usage on the agent usage record (MBFORM-15).

IF PROBLEMS OCCUR

If a problem occurs during the archiving process, a message will appear with choices for the operator, e.g. "Reading on drive B—Abort, Retry, Ignore etc. Press "R" for retry. If message still appears, remove disk and add the letter "A" behind the disk number and insert a new disk and press enter. If the message appears again, Press "I" each time the message appears until the program gets past the bad sector. All data will be stored on the disk. Be sure and label the disk with "B" behind the disk number. Example: BRA-1, Data from 8/15/98 to 8/19/98, Disk 1A, Then the replacement disk will have the same data except the label will be Disk 1B.

6.0 Site Shutdown

6.1 Collect all DAAMS tubes IAW IOP MT-10, (perimeter and personnel monitoring samples). Record the flows as required. Give all samples, tags and data sheets to the RTAP operator.

6.1.1 Ensure that there is sufficient gas in the RTAP for the next day's operation. Refuel the vehicle if necessary; use the lowest grade of fuel. Put all gas receipts in the vehicle maintenance log. Write the mileage (odometer reading) on the gas receipt.

6.1.3 Complete the final RTAP challenge of the day. Record standard usage on the agent usage record (MBFORM-15). Record challenge results on the Monitoring Data Record (MBFORM- 4a or 5).

6.1.4 If shore power is not required, go on to the Final Checks. If shore power is required:

6.1.4.1 Turn off extraneous utilities, i.e. heated sample lines, overhead air vent, vacuum pump, hood, air conditioners/ heaters, computer monitors and in this case GC ovens. Leave appropriate utilities and instruments on. (Unless still above 10 Amps)

6.1.4.2 Make sure that the system is BELOW 10 amps on the master power control panel box BEFORE the vehicle is plugged into shore power.

6.1.5 Conduct Final Checks:

6.1.5.1 Turn GC oven back on, Check MINICAMS.

6.1.5.2 Adjust internal RTAP ambient temperature in relation to outside temperature (if it's hot outside, turn on AC; if it's cold, turn on heat). Also turn hood exhaust on.

6.1.5.3 Check vacuum interface filter for dirt and/or replace dust filters on heated Sampling lines if the chromatography suggests a need to do so.

6.1.5.4 Collect and store all perimeter stands, heated sampling lines and electrical cords.

6.1.5.5 Ensure that the standards are recapped and placed in the freezer.

6.1.5.6 Ensure that the agent log (MBFORM 15) is completed for the day.

6.1.5.7 Ensure that the all Monitoring Data are completed and file the chromatograms for the day in the latest binder.

6.1.5.8 File scratch logs and data sheets in the appropriate binders

6.1.5.9 Set up for the next day:

6.1.5.9.1 Set up perimeter and personnel pumps. Make sure pumps/calibrators are charging.

6.1.5.9.2 Prepare DAAMS tubes sets and field tags

6.1.5.9.3 Condition used DAAMS tubes

6.1.5.9..4 Collect all trash and dispose of in appropriate containers

6.1.5.9..5 Make sure that all doors on the vehicle are locked (including the cab). Lock all Cabinets and drawers in the RTAP.

6.1.5.9.6 Make sure that the cellular phone is set on charge.

6.1.5.9.7 Fill printer trays

6.1.5.9.8 Make sure that all windows are closed and locked.

6.1.5.9.9 Make sure that all heated sample line vacuum pumps are off.

NOTE: All calibration standards must be decontaminated before the RTAP leaves the site at the end of the operation.

6.2 Final Site Shut Down. Record all de-conned standard information on (MBFORM-MB-14) and both user and witness shall sign and date form.

NOTE: All calibration standards must be decontaminated before the RTAP leaves the site at the end of the operation.

Forms Required: MBFORM-4a, MBFORM-5, MBFORM-14, MBFORM-15

MINICAMS QP DATA SHEET

Sample Flow Rate: 1000 mL/min
Location:_____
Target Concentration:_1__ TWA
MINICAMS Serial No.:_____
Alarm Setpoint: 0.80 TWA
(FC=Found Concentration)
(CA=Corrective Action)

Reviewed By:_____
Agent Std:_____ Vial No. _____

Agent: HD VX GB GD
PMT Voltage:_____VDC

DATE	INJ ul	C A L	P1/ F1 FC	P2/ F2 FC	CA or CAL	P3 FC	OPER INITL S	COMMENTS
	4ul							
	4ul							
	4ul							
	4ul							
	4ul							
	4ul							
	4ul							
	4ul							
	4ul							
	4ul							
	4ul							
	4ul							
	4ul							
	4ul							
	4ul							
	4ul							

RTAP REAL TIME MONITORING CHECK SHEET

The following check list shall be completed each operating day for each RTAP on site operation

Standard Vial Number_____ Agent Combo_____ or Agent VX HD GB GD XL

Standard Vial Number_____ Agent Combo_____ or Agent VX HD GB GD XL

Yes No

☐ ☐ SOP #_____Pre-Operational checklist filled out and signed.

☐ ☐ 1. Prior to leaving home station, determine that all monitoring equipment to be used is properly calibrated, operating properly and flow rates are correct and recorded.

☐ ☐ 2. Prior to calibration of monitoring equipment, disconnect "shore power" using proper procedures (below 10 amps), and connect to generator power.

☐ ☐ 3. Prior to leaving home station, Calibrate monitoring equipment IAW paragraph 2 above.

☐ ☐ 4. Upon arrival at monitoring site, inject a 1 TWA (4ul) QP challenge through the heated sample line to assure that the monitoring system (GC+heated sample line) or (MINICAMS+heated sample line) is performing properly.

☐ ☐ 5. Inject a 1 TWA QP challenge after each 4 hours of operation, if operation exceeds 4 hours, and/or at the end of the daily monitoring operation to determine that the monitoring equipment is still operating properly.

☐ ☐ 6. All calibration data, QP challenge data, and flow rates have been entered into the appropriate MBFORM. e.g. MBFORM 4a or 5.

☐ ☐ 7. Agent destroyed IAW paragraph 7 above and MBFORM-14 filled out.

NOTES:

If the QP challenge after 4 hours fails to meet the 1 TWA +/- 25%, a re-challenge is required. If the re-challenge fails, the Monitor must be re-calibrated.

If the end of the day challenge fails to meet the TWA +/- 25% requirement, note this on the QP challenge log (MBFORM- 4a or 5) and perform a re-challenge and document this re-challenge. An additional re-calibration is not required since RTM operations are complete for the day. However, if DAAMS tubes are to be run on the GC, it must be properly calibrated prior to use.

Operators signatures signify that Monitoring operations are performed IAW all requirements of IOP MT-17. Each operator shall sign the check sheet.

COMMENTS:_____

_____

Operator Signature GC

Operator_____Date_____

MINICAMS Operator_____ Date_____

MBFORM 15

CSM CUSTODIAL STOCK AND USAGE RECORD

Container No. _____ CSM Type: _____

Document #: SCBRD-ODC-O-DG-_____

Lot #: _____

Room No._____ Container Vol. (mL): _____

Date	Name of User	Balance Issued (mL)	Usage (mL)	Balance Returned (mL)	Site	Signature of Issuer

MBFORM 14 RECORD OF DESTRUCTION

The following items have or will be deconned according to all Standing Operating Procedures. The resultant waste, following delisting procedures, is no longer dilute surety material.

Item #	Container #	CSM Type/Lot Number	Date Of DECON	Amount (mL)

CUSTODIAN _____ **USER:** _____

_____

WITNESS: _____

RTAP QP DATA SHEET

RTAP MONITOR DATA. TURN IN WEEKLY OR UPON RETURN FROM LOCATION.

P1/P2/P3=1TWA +/- 25% GC Serial Number_____

Location_____ Monitor Number_____

Agent_____STD_____ug/ml Vial Number: _____

(FC=Found Concentration) FF=Fast Flow QP/ HSL= Heated Sample Line

(CA=Corrective Action)

DATE	INJ ul	AGENT	P1/ F1 FC	P2/ F2 FC	CA OR CAL	P3 FC	OPER INITIALS	FFHSL	COMMENTS
	4ul								
	4ul								
	4ul								
	4ul								
	4ul								
	4ul								
	4ul								
	4ul								
	4ul								
	4ul								
	4ul								
	4ul								
	4ul								
	4ul								
	4ul								
	4ul								
	4ul								

Comments:

APPENDIX D

FIELD OPERATING AND MAINTENANCE PROCEDURE

FOR

OPEN PATH FOURIER TRANSFORM INFRARED SPECTROMETER

Op-FTIR

Internal Operating Procedure: Operations Directorate

Monitoring Branch

Title: Field Operating and Maintenance Procedure for Open Path Fourier Transform Infrared Spectrometer (Op-FTIR)

Division: Chemical Operations

Branch: Monitoring Branch

Building/Area: In vicinity of E3346 and other areas nationwide

This internal operating procedure covers operations, methods and procedures of a general nature not covered by a standing operating procedure. This procedure will be effective until rescinded or superseded.

Changes to this procedure will be accomplished by submission of revisions or amendments for approval.

Submitted by:	Approved by:
K. Maguire Monitoring Team	F. G. Lattin Chief, Monitoring Branch

Date: April 8, 1997

IOP Number: MT-18

Revision Number: 0

Prepared by: John T. Ditillo
Don Gamiles

Approved by: F. G. Lattin
X4479

Title: Field Operating and Maintenance Procedure for Open Path Fourier Transform Infrared Spectrometer (Op-FTIR)

Operator's Statement: I have read, or have had read to me the procedures in this IOP. I, by my signature below, indicate that I thoroughly understand and agree to abide by these instructions.

Signature	Date	Signature	Date

Supervisor's Statement: I have personally reviewed this IOP and, to the best of my knowledge, believe that the information listed herein is correct.

Supervisor: _____ **Date:** _____

F. G. Lattin

FIELD OPERATING PROCEDURE
FOR ETG INC.
FOURIER TRANSFORM INFRARED SPECTROMETER

General Information

The scope of work will include assembling and operating an ETG Inc. Open-path Fourier Transform Infrared (FTIR) based field sampling system capable of generating quantitative infrared spectral data of chemical warfare agents (CWA), pesticides, insecticides, and other related compounds. No handling or testing of chemical agents will occur.

Step 1 - System Setup

Unpacking the FTIR sensor, telescope, and retroreflector requires two people.

Step 1a – Setting up the FTIR System Unit

The largest case contains the FTIR sensor (See Figure 1). Open all four latches used to secure the cover of the case. Each person should grab one of the handles that are located on opposite ends of the case. Carefully lift the cover straight up and set aside. The FTIR sensor is now visible and remains safely seated on the bottom of the padded case. The sensor should be left in this condition until its respective tripod has been set up.

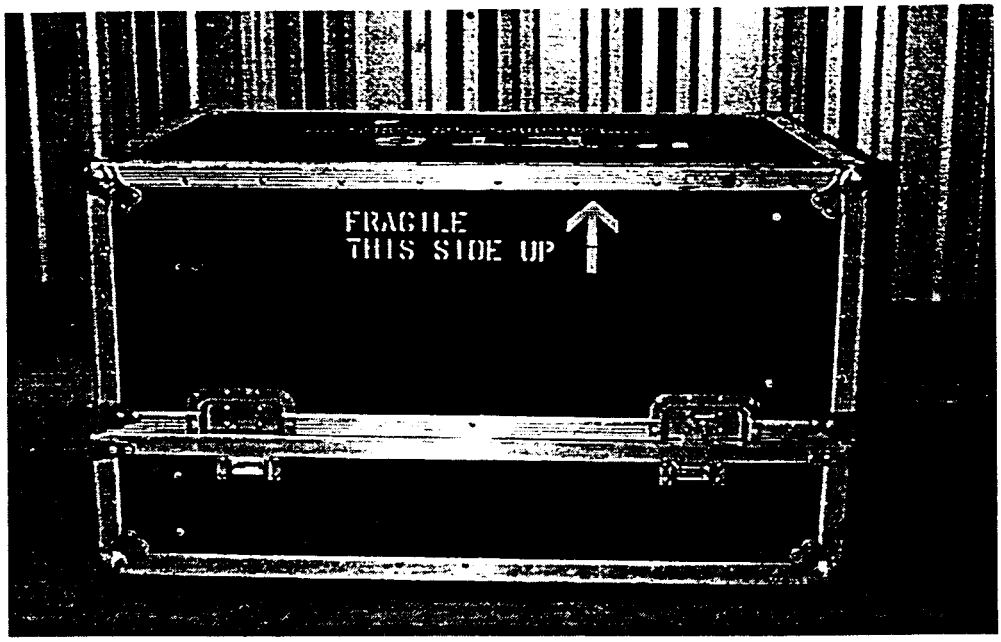

Figure 1

Extend the three legs of the large system tripod. See Figure 2.

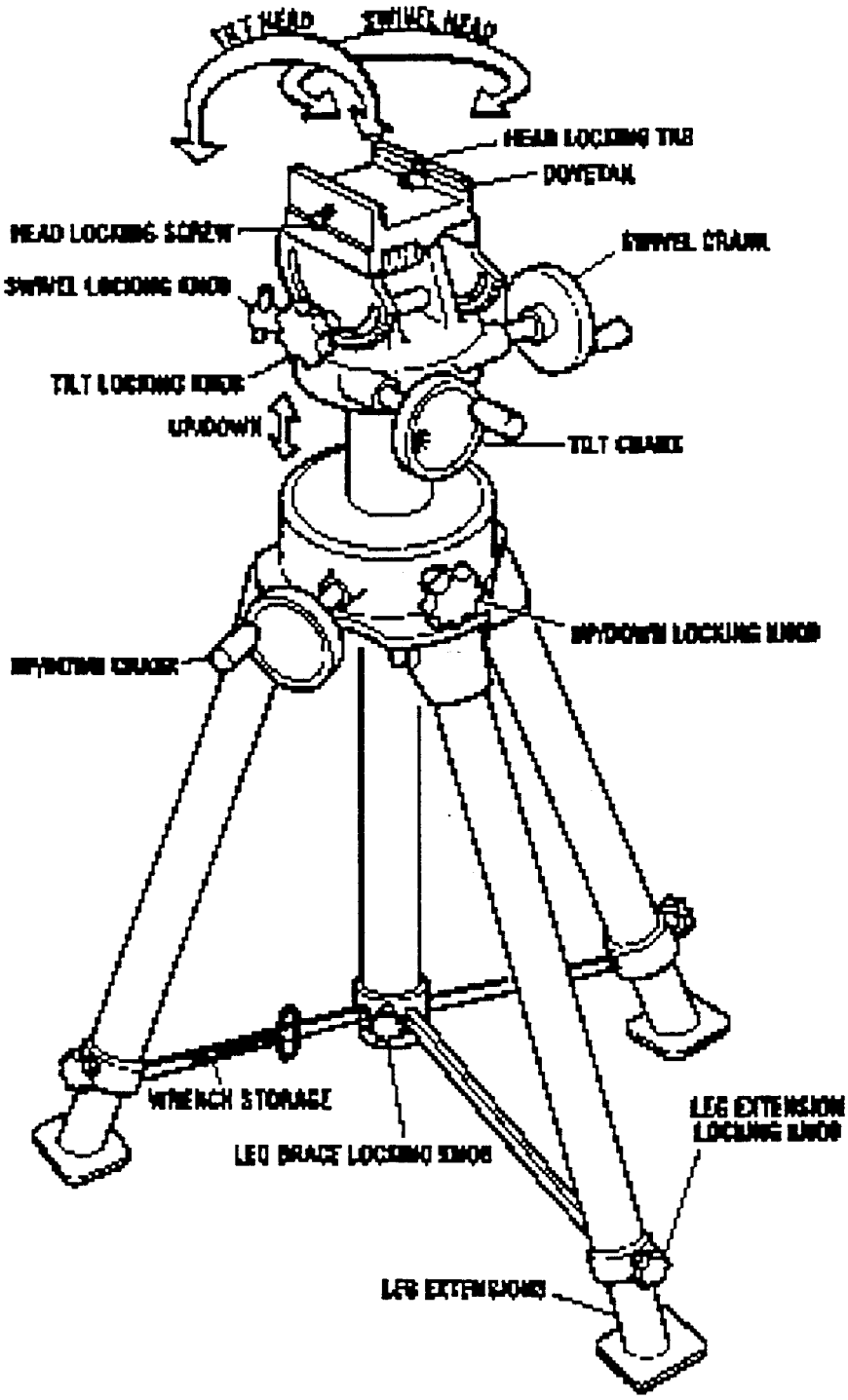

Figure 2

The leg lock on the tripod should be turned clockwise to lock all three legs into position. Each leg can be individually lengthened to attain a level setting by loosening and tightening the adjustment knob on each. Once the tripod is ready, each person should grab one of the handles that are located on opposite ends of the FTIR sensor. Carefully lift the sensor straight up off of the bottom of the case. Be certain to maintain a good grip because the sensor weighs over 200 pounds and cannot withstand the impact if dropped. Again, this step

should only be done once the tripod is ready. Do not set the FTIR sensor down on the ground as the dovetail on the bottom may become damaged.

Attach the ETG FTIR by sliding the dovetail insert on the bottom of the FTIR into the dovetail mount of the tripod. Remove the white, plastic front window cover.

Lock into place by finger tightening the slide lock nut on the bottom, left side of the sensor.

When the system is successfully secured, the locking bolt will move back to its original position and the system cannot be detached.

Step 1b – Attaching the Telescope

Open both of the latches on the telescope case (See Figure 3). The telescope has no handles and can be awkward to hold when lifting from the case. One person should grasp the telescope by the dovetail on the back. The person lifting by the dovetail should be aware that most of the weight of the telescope is towards the back. The other person can grasp the other end fairly easily by reaching inside the telescope from the front.

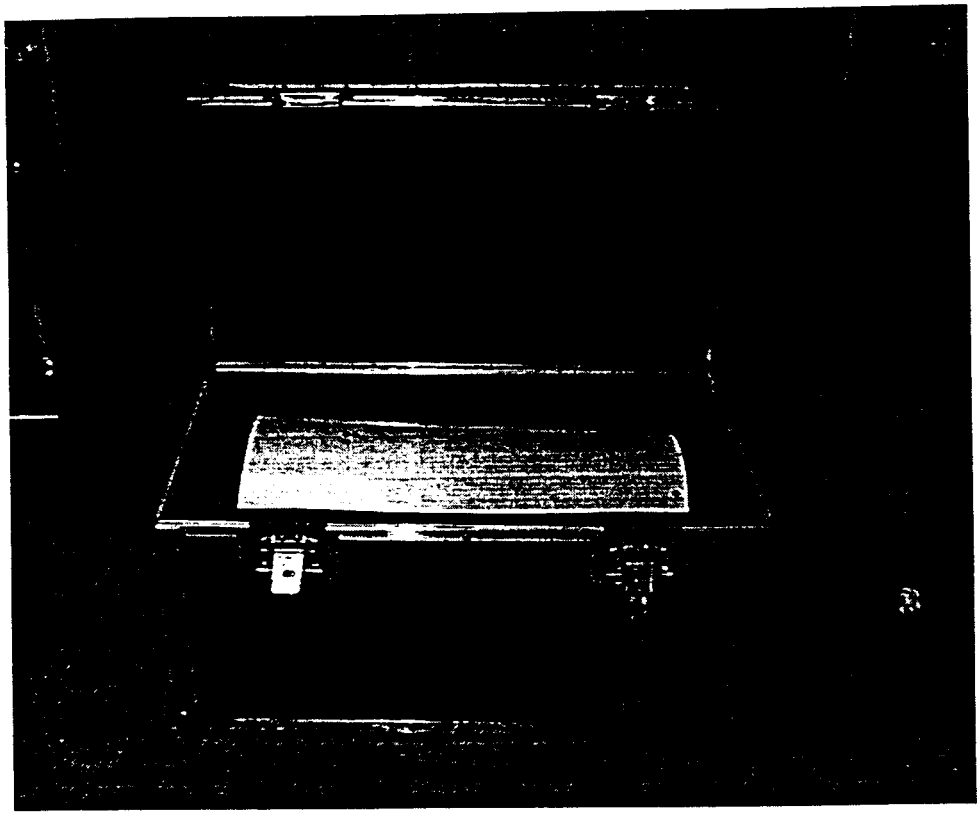

Figure 3

Once each person has a good grip, lift the telescope straight up out of the case. **Take care not to touch the optical glass at the Dovetail end of the telescope. Fingerprints on the optics can seriously degrade the performance of the system, any indication of their presence should be immediately reported to a supervisor. Under no circumstances should the operator attempt to clean the optical surfaces.** Each person should grasp underneath the telescope with his free hand immediately when the telescope is clear of the foam padding in the case to assure a good grip. The telescope is fragile and cannot withstand the impact if dropped.

The telescope attaches to the front of the air sensor as seen in Figure 4.

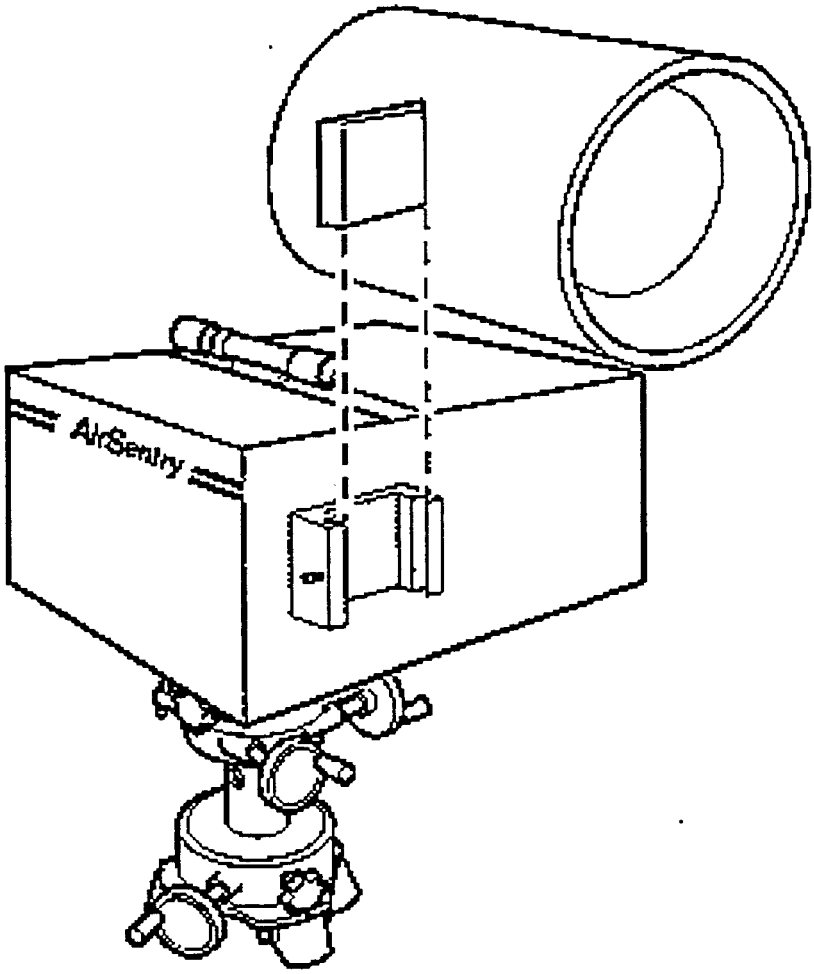

Figure 4

Tighten the set screw as seen in Figure 5.

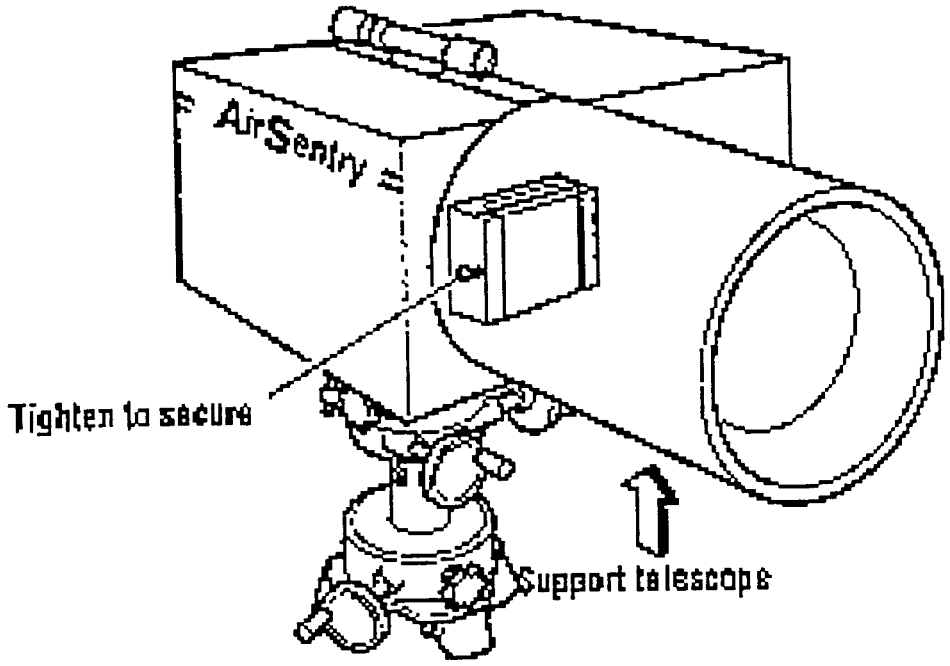

Figure 5

Step 1c – Setting up the retroreflector

Extend the three legs of the small tripod. See Figure 6.

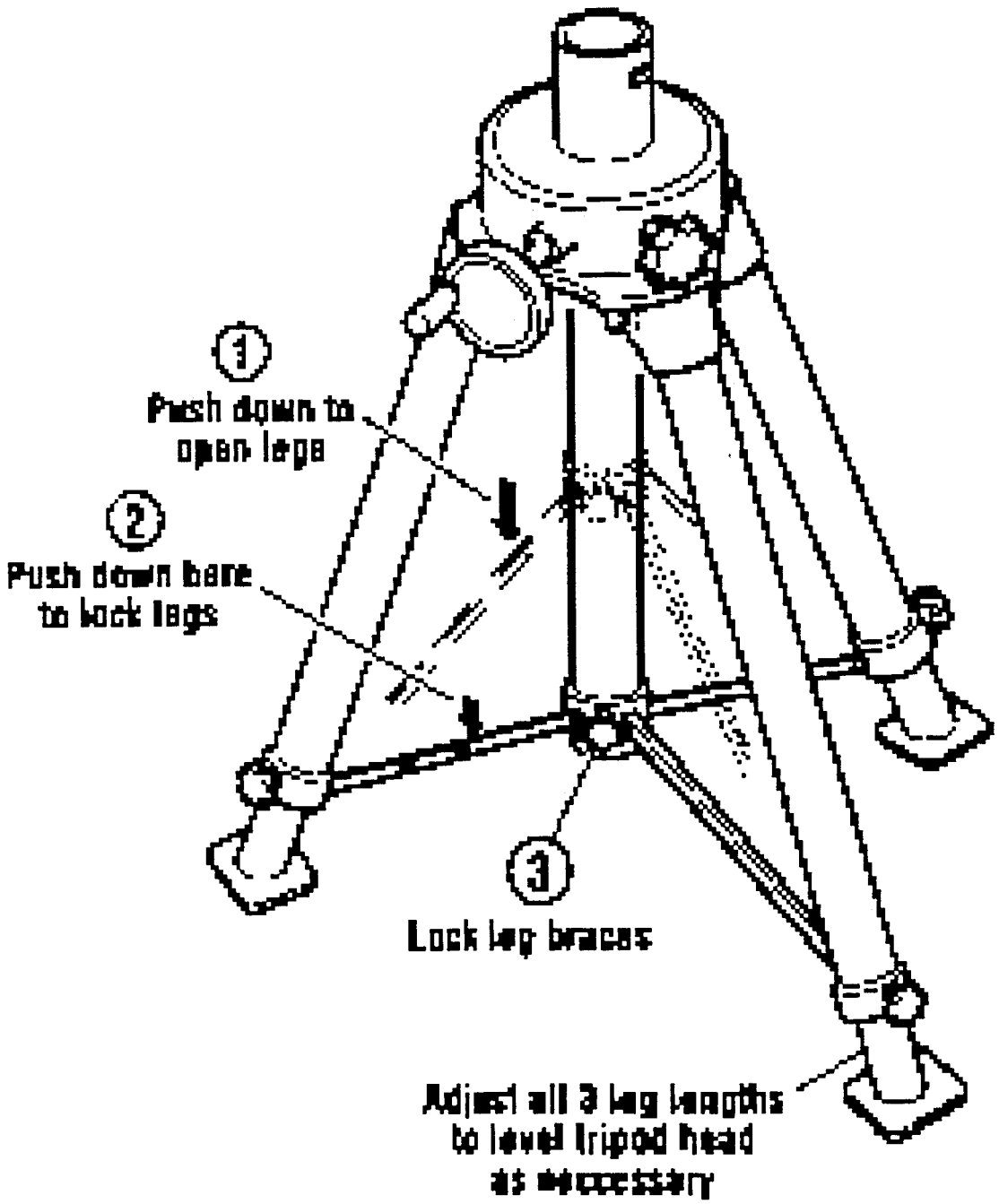

Figure 6

The leg lock on the tripod should be turned clockwise to lock all three legs into position. Each leg can be individually lengthened to attain a level setting by loosening and tightening the adjustment knob on each.

Once the retroreflector tripod is ready, open both latches of the retroreflector case (See Figure 7). The retroreflector has no handles and is relatively heavy. To lift the retroreflector from the case, each person should grasp opposite sides of the retroreflector simultaneously. To get a good grip on the retroreflector,

push against it with your hands while at the same time lifting straight up. If the cover is not on the retroreflector, each person can reach inside and grab the retroreflector by its casing, however, there should be a cover on each retroreflector so this rarely be an option.

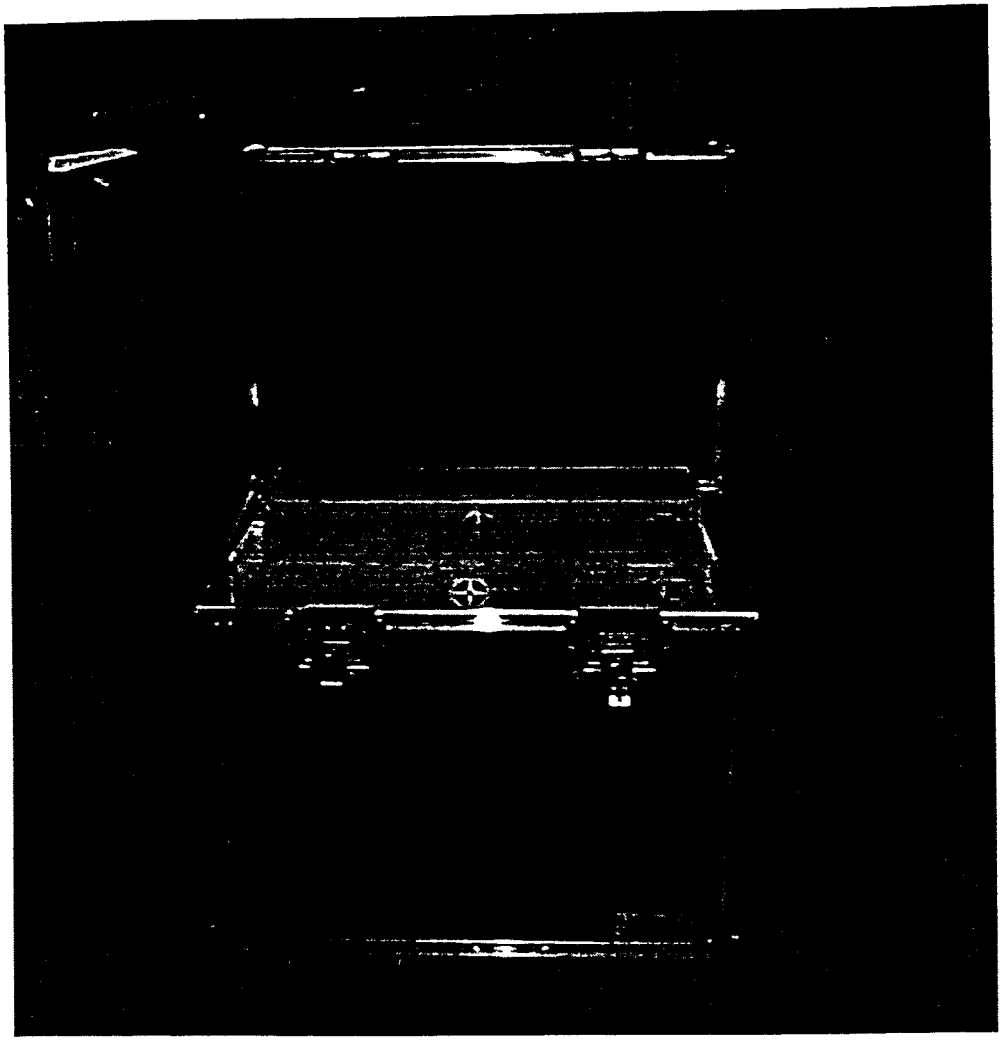

Figure 7

Each person should grasp underneath the retroreflector as soon as it clears the top of the case to insure a good grip. The retroreflector is fragile and cannot withstand the impact if dropped.

Slide the retroreflector dovetail insert onto the center of the tripod dovetail as seen in Figure 8.

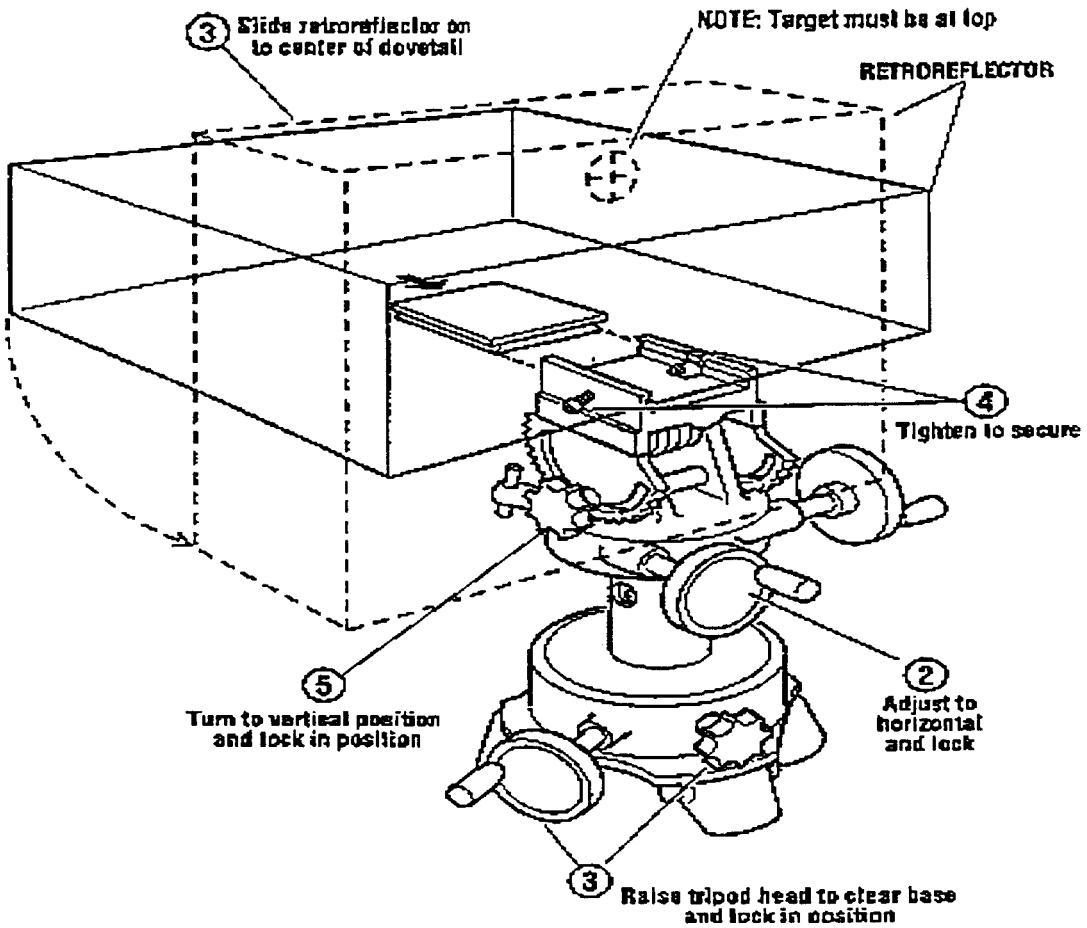

Figure 8

Tighten both locking screws (see Figure 8, element #4) with the hexagonal wrench.

The vertical position crank until the retroreflector is 90 degrees to its original position (See Figure 9).

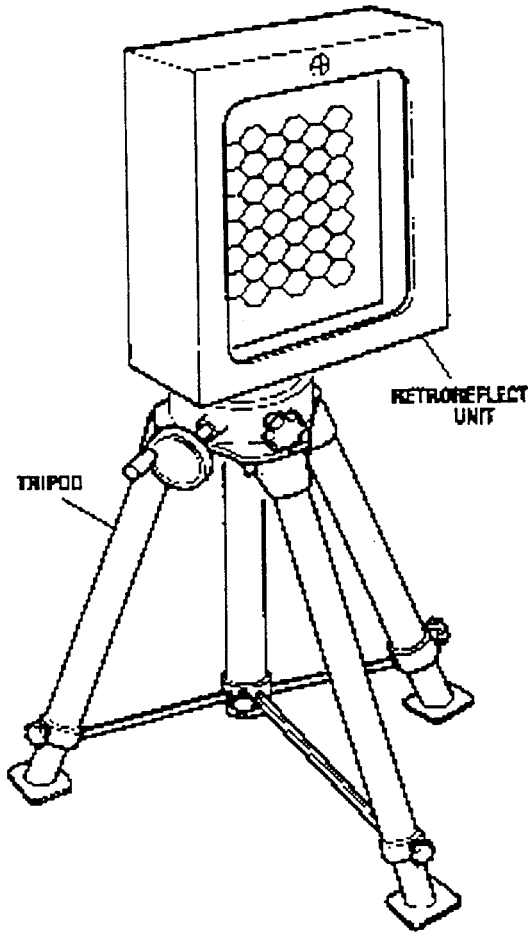

Figure 9

Remove the Plexiglas cover using the large turnkey. Be careful not to lose the hinge pins.

Step 2 – System Startup

Step 2a – Supplying Electrical Power to the System

Place the portable generator downwind of the path of analysis at a distance of 50 to 100 ft (depending on length of extension cord). Insure that the 110 VAC supply switch is in the OFF position.

Plug 50/100-foot extension cord into portable generator.

Plug 110 VAC line conditioner into multiplug connector of the extension cord. Insure that the conditioner is turned to the OFF position.

Plug one end of FTIR power cord into system connector labeled "ETG Power" and the other into the line conditioner.

Plug the Dolch workstation power cord into the line conditioner. Insure that the workstation is turned to the OFF position.

Start the portable generator and allow it run several minutes until it runs smooth in the unchoked position. Turn on the 110 VAC supply switch.

Turn on the line conditioner.

Step 2b – Powering System Unit and Initializing System Software

Turn the Dolch workstation (PC) on.

Set the workstation date/time to local date and time.

Click on the AirSentry-FTIR CMS icon. The software needed to run the FTIR is active at this point (See Figure 10).

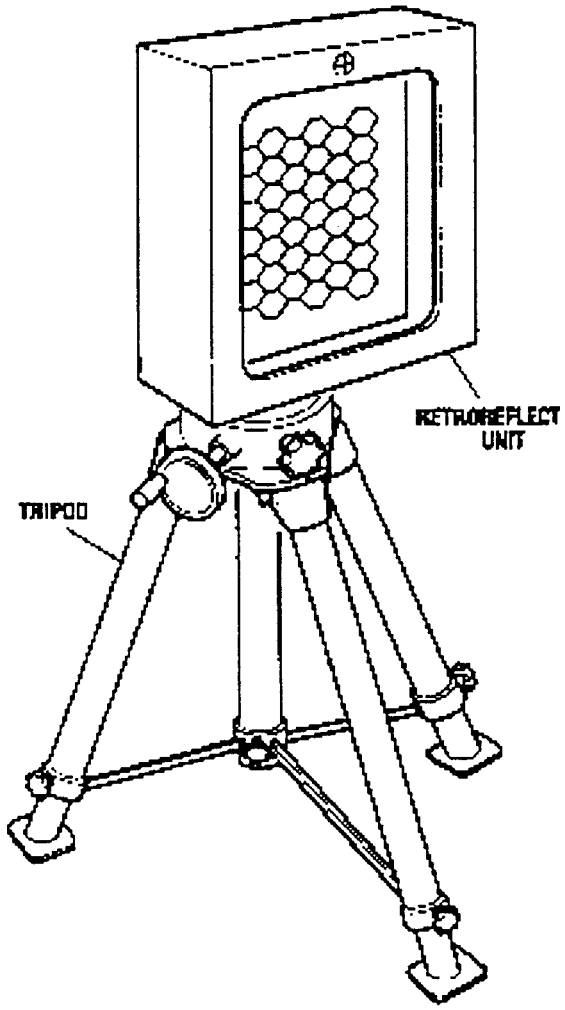

Figure 10

Click on the **COMMAND** icon, and drag the arrow down to the **MODIFY PARAMETERS** icon. The **MODIFY PARAMETERS** screen will appear (See Figure 11).

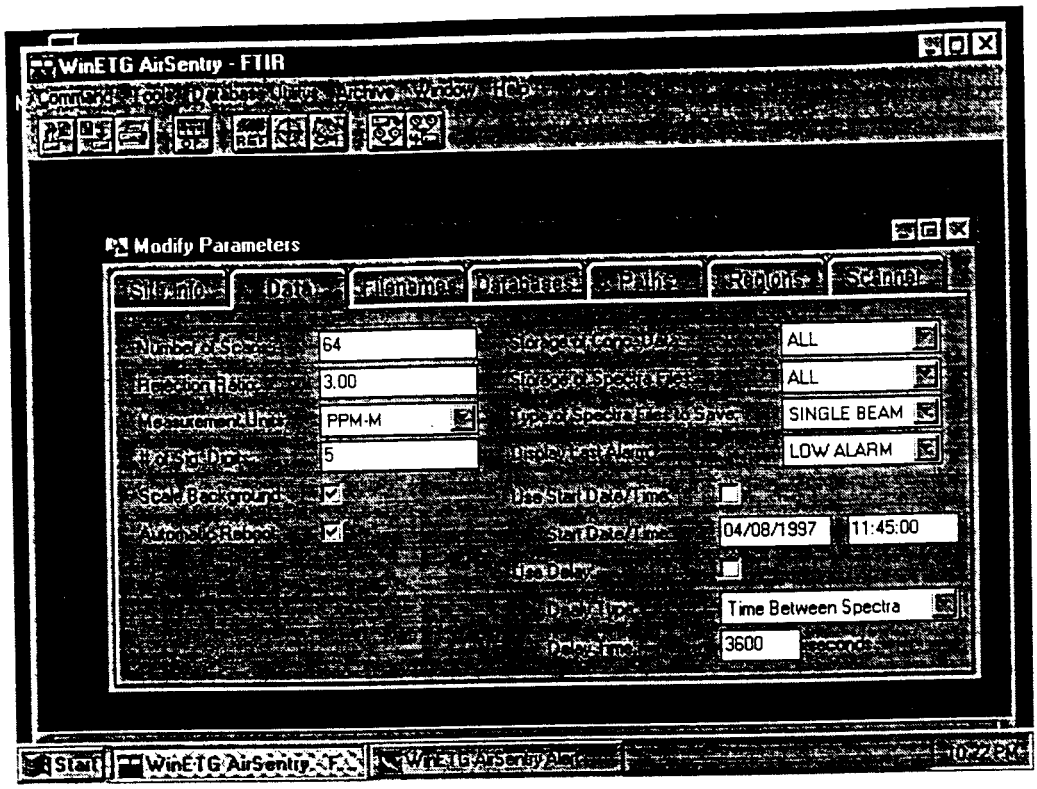

Figure 11

There are a couple of TABS to click on. These settings will be used throughout the data analysis session.

Click on **SITE INFO** and correct the information on this screen to accurately reflect information pertinent to your specific project.

Click on the **DATA** tab. Set the scans coadd parameter to 64. This result in approximately 5 minutes of coadded data per analysis/save.

Click on the **FILENAMES** tab. Rename the file in the **BACKGROUND FILE** box. Rename the file in the **SPECTRA FILE PREFIX** box. Rename the file in the **SCRIPT FILE** box to the analysis script designed specifically for the project. The following filename convention should be followed for all data collection sessions.

In order to eliminate the numerous naming conventions for the collection of Open path Fourier Transform Infrared (Op-FTIR) data the following 8.3 standard has been adopted:

ABBCCDDD.EEE

where

A	=	S	(sample) or
	=	B	(background)
	=	Z	(zero-path background)
	=	Q	(QA gas)
BB	=	AA to ZZ	(Two letter site designation of your choice)
CC	=	01 to 99	(use as a set indicator e.g. 01 first day, 02 second day or 01 first day am, 02 first day pm)
DDD	=	001 to 999	(use as scan designator e.g. 001 first scan, 002

second scan. ETG software will increment this value automatically.)

EEE	=	SPC	(spectrum) or
	=	IFG	(interferogram)

For example:

BEA01001.SPC May represent a background taken at ERDEC, Day 1, Scan 1.

SEA010012.SPC May represent a sample taken at ERDEC, Day 1, Scan 12.

For additional help on filename use, please see Appendix A – Sample Open-path FTIR Project.

There is other tabs preset. Feel free to take a look at the settings, however they should not be changed. Close out the window once site info, data, and filename information has been set.

It is now time to turn the FTIR on. The AirSentry software has a pull-down menu at the top of the main screen. Immediately under the pull-down menu is a toolbar. The fourth icon from the left in the toolbar is the CP button (See Figure 10). Click on this button with the mouse. The FTIR CONTROL window (See Figure 12) will come up on your computer screen. Click on the system power off icon to turn the FTIR on. At this point the icon should read on and you should hear the FTIR start.

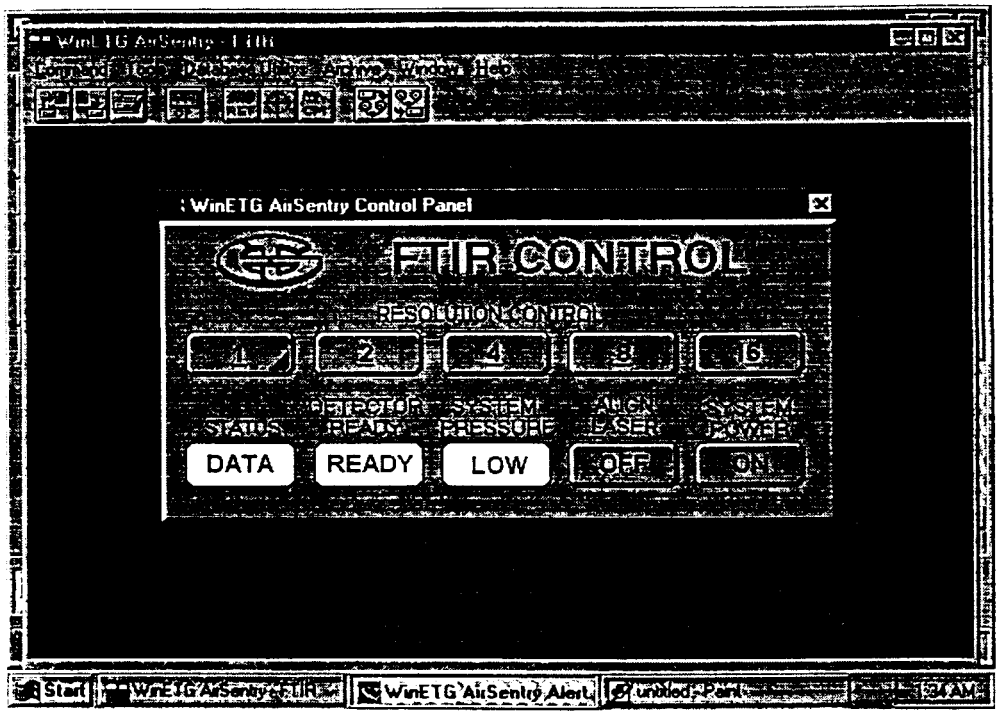

Figure 12

While in this window, assure that the number 1 is highlighted by the triangle in the corner. If it is not, click the number 1. Record start-up time on Open-path FTIR Data Log sheet. System should indicate "Detector Ready" within 10 minutes. Note the cool down time on log sheets. If cooling takes more than 15 minutes, power down the system and contact supervision. **Do not operate the system if it has not cooled down in 15 minutes.**

Step 2c – Check System Performance and Conduct Initial System Alignment

After the Detector Ready Signal is OK, the FTIR can be aligned. Position the retroreflector directly in front of the telescope. The retroreflector and telescope should be at approximately the same height. Be careful not to bump the retroreflector with the system's telescope, as the individual reflector cubes are very fragile.

To do the alignment, click on the sixth button from the left (See Figure 10). This button looks like a targeting sight. The FTIR Alignment window will appear on your computer screen (See Figure 13).

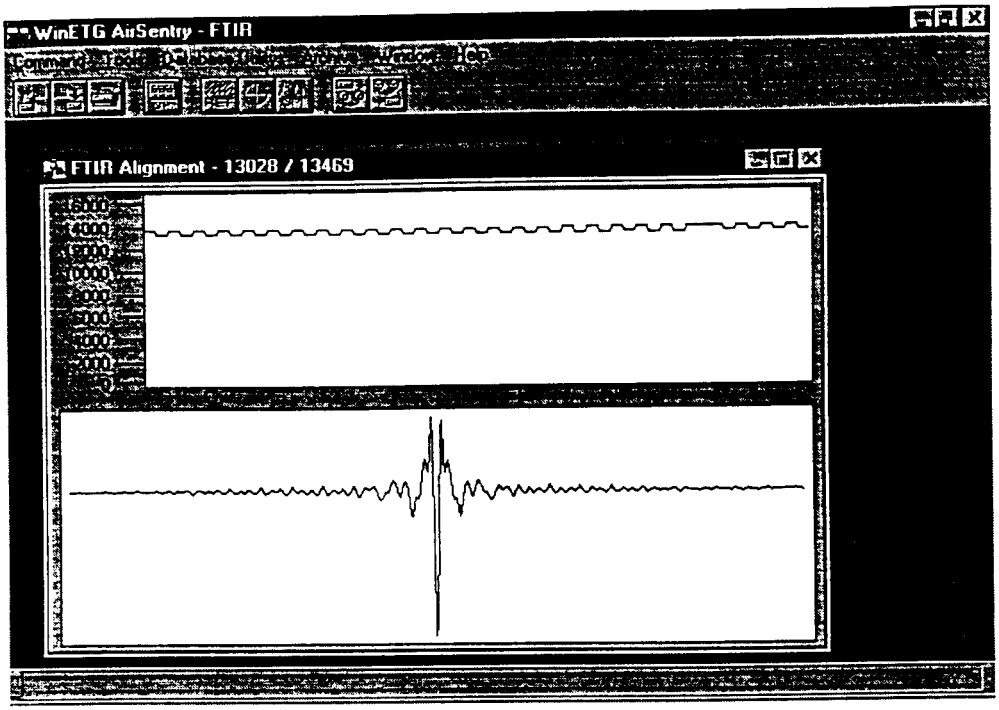

Figure 13

The number at the top of the alignment screen indicates the intensity of the infrared light incident on the detector (See Figure 13). The idea is to move and adjust positions of the FTIR and the retroreflector to maximize the number at the top of the screen. The maximum signal strength value is 16384. This number should never be realized for it indicates a condition of detector saturation. The maximum signal strength value should be around 14000 when the retroreflector is within 10 meters. This value should decrease substantially with increasing distance between the retroreflector and the telescope.

The graph in the top of the window shows a trend in the light intensity. The y-axis shows the light intensity and the x-axis is a time function. As the light intensity increases, the line across the graph will rise. This graph can be used as a tool when aligning the FTIR and to monitor the stability of the alignment.

The lower part of the alignment window shows the interferogram pattern. The operator must assure that there is symmetry in the pattern, or in other words, if you drew a vertical line down the middle of the largest peak (the center burst), the right and left half should look about the same.

Once the FTIR is aligned as indicated by maximization of the numbers at the top of the alignment window, the window can be closed. Be careful not to move either the system unit or retroreflector as this position will be used in Step 3 – Background Data Collection.

Record the maximum signal strength in the Open Path FTIR - Data Log. These log sheets *must be completed* for each data collection session. This includes all requested information as well as a site sketch. Use these logs to document any system failures or odd behavior. Label any broken or misbehaving hardware. An example of the log sheets can be found in Appendix A – Sample Open-path FTIR Project.

Wait 45 minutes for the system to stabilize.

Step 3 – Background Data Collection

Step 3a – Collecting a Zero Path Background

Since in many deployment scenarios it can not be assumed that a true clean path can be established to use as a background reference, it is necessary to collect a zero path background. This allows the analyst to remove spectral features due to instrument components while minimizing atmospheric pollutant concentrations in the beam path.

The system and retroreflector should still be in alignment from the previous Step 2c – Check System Performance and Conduct Initial System Alignment.

Click on the **COMMAND** pull-down icon in the FTIR software and drag the arrow down to **BACKGROUND REFERENCE** (See Figure 14). Check to insure that the displayed filename and the scans coadded are the same as the values entered during Step 2c. If not, you may click on the appropriate button and correct now. Once these values are verified/set, click on the **COLLECT** icon. When the collection begins, the screen you are now viewing will have a cancel icon in place of the collect icon, and the scan number will start increasing from 0 to 64. Once the background is complete the software will prompt the user with the question, "Do you want to use this background as a reference?". Click on <u>NO</u> and close out this screen.

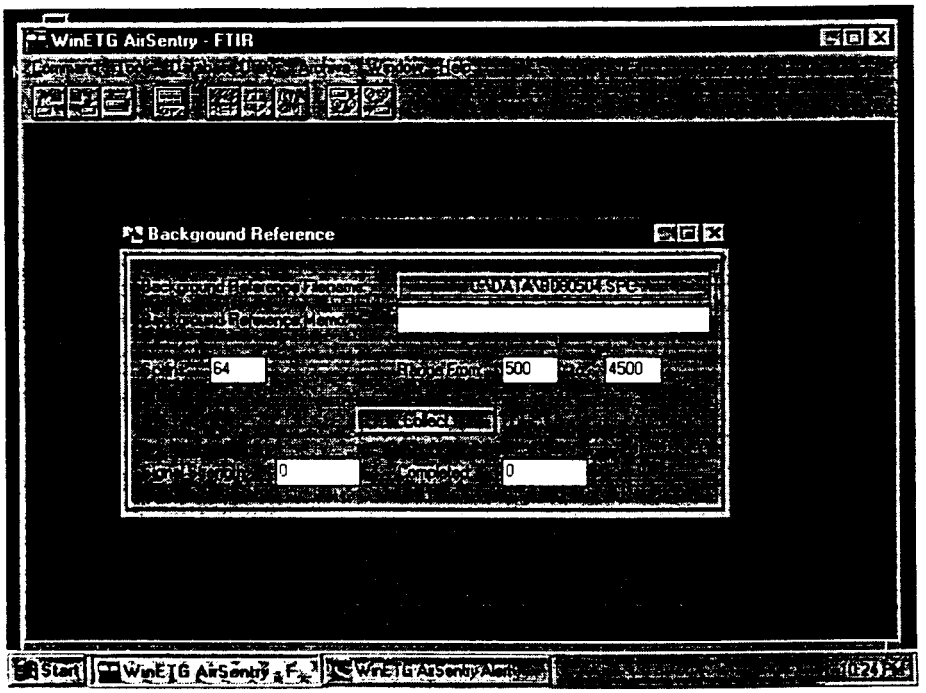

Figure 14

The next step is to take a second zero path background spectra. Click on the **COMMAND** pull-down icon and drag

the arrow to **BACKGROUND REFERENCE** (See Figure 14). The background reference screen will come up. **RENAME THE FILE** and hit the **COLLECT** icon. When collection is complete, the user will once again be prompted with the question, "Do you want to use this background as a reference?". Again, click on **No** and close out the screen.

The final step is to take a third zero path background spectra. Click on the **COMMAND** pull-down icon and drag the arrow to **BACKGROUND REFERENCE** (See Figure 14). The background reference screen will come up. **RENAME THE FILE** and hit the **COLLECT** icon. When collection is complete, the user will once again be prompted with the question, "Do you want to use this background as a reference?". This time, click on **YES** and close out the screen.

The operator should complete the Sections 1, 2, and 3 of the standard Open Path FTIR - Data Log. The background scan information should be recorded in Section 5 of the data log. A sample copy of these log sheets is provided in Appendix A.

Step 4 – Quality Assurance Data Collection

If a known concentration of infrared active gas can be obtained in a compressed gas cylinder, then the internal QA cell can be used to determine the precision and accuracy for that particular compound. The proper use of the internal cell can act as a verification of a properly functioning Open-path FTIR, and assumptions simply made about its detection of designated target compounds. Sulfur hexafluoride will often be used for this purpose. The following procedure describes the use of the internal QA cell.

Step 4a – Quality Assurance System Setup

The system and retroreflector should still be in alignment from the previous Step 2c.

Make all necessary gas connections - regulator to SF6 cylinder, tubing to regulator, tubing to quick connect male fitting, and quick connect to the corresponding female fitting on the FTIR sensor labeled QA Cell inlet.

ALWAYS insert a male quick connect fitting into the female outlet on the FTIR sensor before the turning on the gas. The outlet is not open and gas cannot flow freely through the cell unless this is the case. Turning on the gas at a substantial flow with the outlet closed will cause the cell to become pressurized and it could be damaged.

Connecting tubing to the male quick connect fitting that fits into the outlet is not necessary for proper gas flow, however, a long length of hose will allow the gas to be directed away from the operator. Also note that the escaping gas should not flow in front of the telescope as the gas in the cylinder is at a high concentration and may absorb in the open path and cause erroneous results. Tubing can be used to avoid this problem as the escaping gas can be directed downwind of the path.

Once all connections have been made, slowly turn on the SF6 gas. A flow of only a few cubic centimeters a minute is required and larger flow rates will only cause turbulence in the cell and lead to improper mixing. A small rotameter can be placed on the outlet tubing to monitor the flow, or one can simply place his finger over the end of the tubing for a second. There should only be enough flow so that a positive pressure can be felt, but not so much that it tends to push you finger away from the end of the tubing.

Allow the gas to flow through the cell for several minutes before starting the collection. It is recommended to let the gas flow prior to data collection until a volume of at least five times that of the cell volume has passed through. This will insure homogeneous mixing in the cell.

Data collection can now begin. The system must be aligned just as in normal background data collection. The same procedures are followed with the exception of the filename that should give some indication that the spectrum contains the QA gas. Refer to the previous Step 2b and Step 3 for specific instructions on how to name and collect zero-path background spectra.

Collect three spectra with the QA gas flowing through the cell. Check the flow rate periodically to make sure that the gas is still flowing. Multiple spectra are required for precision calculations.

Once the data collection is finished, turn off the QA gas. The internal cell must now be purged with dry nitrogen before target data collection can begin. Disconnect the tubing from the SF6 regulator and attach it to the Dry Nitrogen regulator. Slowly turn on the Dry Nitrogen gas until a slow, steady flow is felt at the outlet port.

Allow the gas to flow through the cell for several minutes before starting the collection. It is recommended to let the gas flow prior to data collection until a volume of at least five times that of the cell volume has passed through. This will insure that no SF6 remains in the internal cell.

Calculate the percent accuracy by dividing concentration given by the instrument during the QA process by the known concentration of the cylinder.

Calculate precision by analyzing the multiple spectra collected during the QA process and expressing the precision as the relative standard deviation of these concentration values.

Record these values on the Open-path FTIR – Data Log.

Step 5 - Target Data Collection

Step 5a – Reposition the Retroreflector

The retroreflector used during the system alignment and zero-path background collection can now be moved. Using this retroreflector or another similarly configured retroreflector, establish a clear path downwind of the specified target location. This path should be greater than 50 meters and as long as 400 meters as determined by the project goals, site and atmospheric conditions.

With the retroreflector in its new position, repeat the alignment procedure in Step 2a. Note that the overall signal strength displayed may be significantly less than that obtained during zero-path background collection. Signal strength readings greater than 3000 should be obtained or the pathlength should be reduced.

The Open-path FTIR is now aligned and data collection can begin. To begin data collection, click on the **COMMAND** pull-down menu and drag the arrow to **CONTINUOUS MONITOR** (See Figure 10). Data collection will begin immediately and the screen will update as seen in Figure 15.

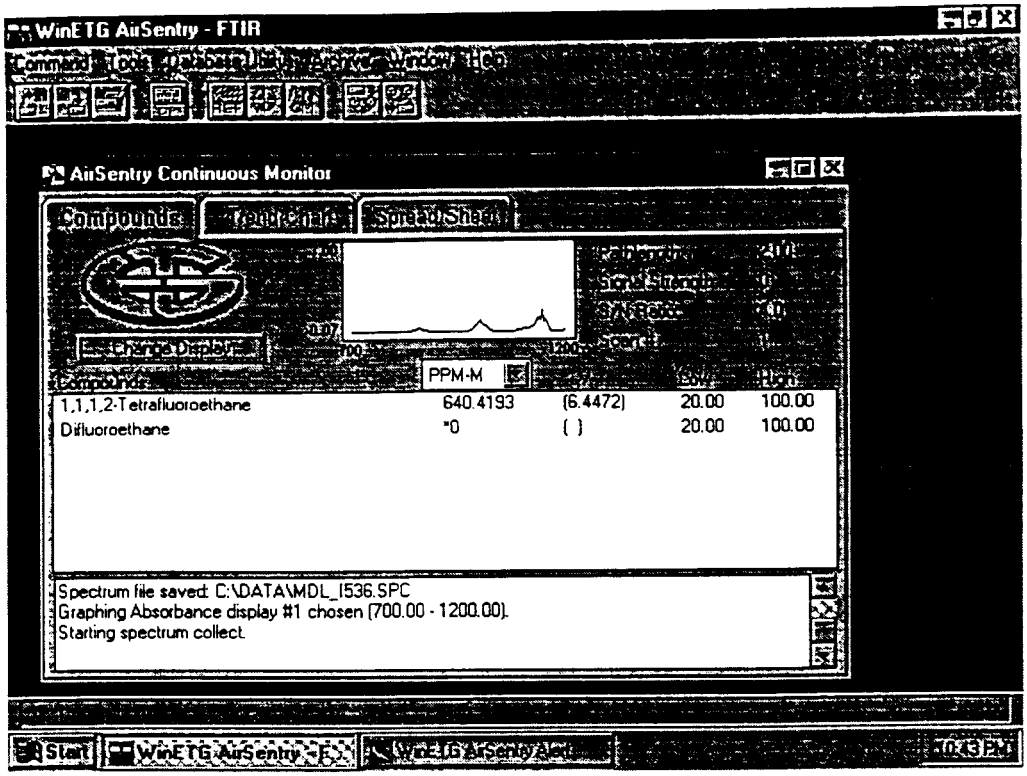

Figure 15

Step 5b – Continuous Monitor Software

The important information is the numerical value under the PPM column. Initially ***** will appear. After some data has been collected, a number will appear. The number less than 1 indicates that the concentration in the beam path is below the minimum detection limit of the instrument. A value of *0 indicates that there is something in the FTIR light path, but it is not what the software is looking for. A value greater than 1 indicates that the compound of interest is present in the light path. Specific alarm details should be included in site-safety plans.

The operator will note this window is in the form of index cards. The trends chart will continuously plot the relative concentration of compound over time.

Avoid bumping the system or obstructing the beam path during the collection process.

Operator should confirm that the system is correctly saving files. This can be accomplished by reading the activity log at the bottom of the **CONTINUOUS MONITORING** screen. A message similar to "Data saved as C:\Data\SOF01001.SPC" should be displayed at the end of each 64x coadd.

Step 5c - Ending Target Data Collection

To end the target data collection simply close out the **CONTINUOUS MONITORING** window. The initial AirSentry CMS screen should be displayed.

Step 6 – Final Background Data Collection

It is desirable to repeat the zero-path, background data collection after completing target data collection. This will create background files taken more closely, in time, to the final target scans and account for any system changes that took place during the period of target data collection.

Reposition the retroreflector directly in front of the system telescope and repeat Step 2c to maximize signal strength.

Collect three additional backgrounds as described in Step 3a. Make sure to set the background filename to a unique name so that existing background files are not overwritten.

Step 7 – Turning off the System

To turn the Open-path FTIR off, click on the fourth icon in the tool bar, **CP**. The **FTIR CONTROL** dialog box will appear on the computer screen. Click on the **ON** and the power will go off. Close out this window. Close out the AirSentry-FTIR software. Exit the Windows software.

APPENDIX A
Sample Open-path FTIR Project

As an illustration of many of the steps described in this Internal Operation Procedure, a sample project has been created. The fictitious project follows:

Monitoring was requested on the downwind perimeter of Edgewood Area, Aberdeen Proving Ground's Old O-Field. The monitoring took place 1-5 June 1997 with the primary compound of interest being phosgene. A real-time analysis script "ofield.spt" was created specifically for this effort and placed in the C:\data\script directory of the Dolch workstation. The team used FTIR labeled "CNBCET5" for the project.

The following data logs, filenames, and directories were used for the project.

Sample Data Log

Section 1 – General

Date: **6/01/97**
Location: **Old O-Field**
OP-FTIR GPS Location: **39° 20' 36N 076° 17' 36W**
Target Retro GPS Location: **39° 20' 37N 076° 17' 35W**
Distance to Target Retro: **150 FT**
Target Compound (if known) **Phosgene**
Analysis Script: **Ofield.spt**
Setup Description (sketch):

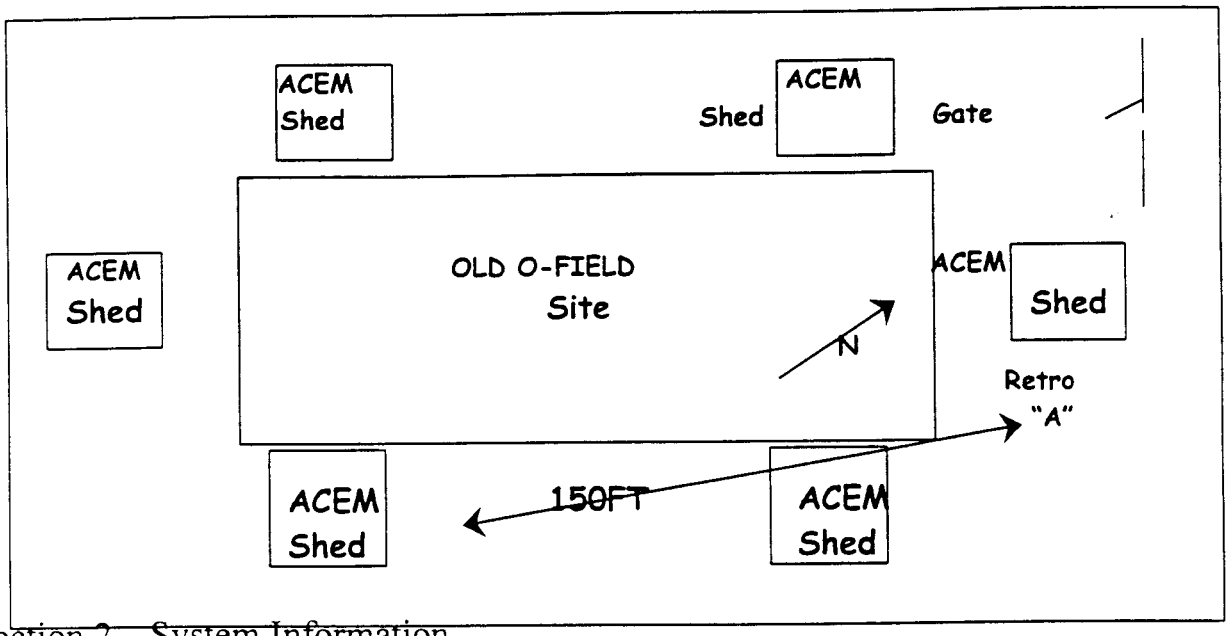

Section 2 – System Information

Name: **CNBCET5** **(found on system unit label – rear, center)**
Serial Number: **FTIR015** **(found on system unit label – front, left)**
Hours: **627** **(found on system unit odometer – rear, right)**
Range (cm-1): **500-4000** **(set in MODIFY PARAMETERS)**
Resolution (cm-1): **1 cm-1** **(set in CONTROL PANEL)**

Section 3 – Weather Conditions

Temperature: **(this info will be extracted for Weatherpak logs)**
Humidity: **(this info will be extracted for Weatherpak logs)**
Wind Direction/Intensity: **(this info will be extracted for Weatherpak logs)**
Precipitation/Intensity: **Rain/Light**

Section 4 - General Comments

Light rain begins falling @ 1050. Results in slight decrease in signal strength.

Post security parks vehicle in beam path for several minutes. Scans SEA01103, SEA01104, and SEA01105 effected.

Large explosion on northwest edge of field @ 15:25. System reports phosgene hits for next 10 minutes.

No failures or abnormal equipment behavior recorded.

Sample Project Filenames

The following filenames were created for the project. Convention should remain consistent throughout the duration of the project as this makes data tracking and post analysis easier.

1 June 97

ZEA01001.SPC (First zero-path file)
ZEA01002.SPC (Second zero-path file)
Etc...

QEA01001.SPC (First QA file)
QEA01001.SPC (Second QA file)
Etc...

SEA01000.SPC (Target data file prefix)

2 June 97:

ZEA02001.SPC (First zero-path file)
ZEA02002.SPC (Second zero-path file)
Etc...

QEA02001.SPC (First QA file)
QEA02001.SPC (Second QA file)
Etc...

SEA02000.SPC (Target data file prefix)

3 June 97:

Etc...

Sample Project Data Archiving

Data is stored on the Dolch workstation in the directory C:\data by the AirSentry software unless specifically changed by the operator. It is a good idea to make duplicate copies of the data on removable media and then move the data to a permanent directory at the end of each day. This creates duplicate copies of the data and insures that no data be lost due to system failure.

At the end of each day, *copy* the data (FTIR, Weather, Digital photos) to the Zip (Drive D:). Using our fictitious Edgewood Project establish the following directory tree on the Zip:

```
D:\APGEA
        ...\06_01_97
                ...\CNBCET5
                ...\MET
                ...\PHOTOS

D:\APGEA
        ...\06_02_97
                ...\CNBCET5
                ...\MET
                ...\PHOTOS
```

Create this same tree on the Dolch's hard drive and *move* the data from its original storage location to this directory. This will create two copies of the data and clean AirSentry directories to dump into each day.

Please take several digital photos of the system setup and the surrounding area. These will be included in the data summary to the customer and may help if problems arise.

At the end of the mission include a subdirectory, C:\APGEA\Report and include all Word documents such as the final report, sitreps, etc.

Bring the Zip disks back when you return so that the data can be promptly analyzed and archived.

APPENDIX H
HEARING CONSERVATION PROGRAM

APPENDIX H
HEARING CONSERVATION PROGRAM

The purpose of this Hearing Conservation Program is to provide protection for employees from adverse health effects associated with occupational exposure to noise. The program consist of annual audiometric testing of workers, annual employee training, selection and use of hearing protection, and noise monitoring. All Parsons ES employees and subcontractors must comply with this program.

AUDIOMETRIC TESTING PROGRAM

Audiometric testing shall be made available to all employees whose exposures equal or exceed an 8-hour time- weighted average of 85 decibels. Audiometric tests shall be performed by a licensed or certified audiologist, otolaryngologist, or physician who is certified by the Council of Accreditation in Occupational Hearing Conservation. Each employee assigned to noisy operations must receive a baseline audiogram prior to assignment and yearly testing thereafter for as long as that employee is exposed to excessive noise levels (8-hour time- weighted average of 85 decibels or greater). Each employee's annual audiogram is compared to that employee's baseline audiogram to determine if the audiogram is valid and if a standard threshold shift has occurred. (A standard threshold shift is a change in hearing threshold relative to the baseline audiogram of an average of 10 dB or more at 2000, 3000, and 4000 Hz in either ear.) This comparison should be done by a physician.

If a comparison of the annual audiogram to the baseline audiogram indicates a standard threshold shift has occurred, the employee shall be informed of this fact in writing, within 21 days of the determination. The following steps are taken by the SSHO when a standard threshold shift occurs:

- Employees not using hearing protectors shall be fitted with hearing protectors, trained in their use and care, and required to use them.
- Employees already using hearing protectors shall be refitted and retrained in the use of hearing protectors and provided with hearing protectors offering greater attenuation if necessary.
- The employee shall be referred for a clinical audiological evaluation or an otological examination, as appropriate, if additional testing is necessary.
- The employee is informed of the need for an otological examination if a medical pathology of the ear that is unrelated to the use of hearing protectors is suspected.

Audiometric tests shall be pure tone, air conduction, hearing threshold examinations, with test frequencies including as a minimum 500, 1000, 2000, 3000, 4000, and 6000 Hz. tests at each frequency shall be taken separately for each ear. Audiometric tests shall be conducted with audiometers (including microprocessor audiometers) that meet the specifications of, and are maintained and used in accordance with, American National Standard Specification for Audiometers, S3.6-1969. The functional operation of the audiometer shall be checked before each day's use by testing a person with known, stable hearing thresholds, and by listening to the audiometer's output to make sure that the output is free from distorted or unwanted sounds. Audiometer calibration shall be checked acoustically at least annually in accordance with OSHA requirement (29 CFR 1910.95 Appendix E)

HEARING PROTECTORS

The SSHO shall make hearing protectors available to all Parsons ES and subcontract employees exposed to an 8-hour time-weighted average of 85 decibels or greater. Hearing protection for this project will consist of ear muffs or foam fitting ear plugs. The selection of hearing protector will be based upon noise attenuation requirements for the task and worker comfort.

EMPLOYEE TRAINING

The SSHO will develop a hearing conservation training program for all employees assigned to noisy work. This training will be a component of the initial site safety training. As a minimum the training shall consist of:

- The effects of noise on hearing.
- The purpose of hearing protectors, the advantages, disadvantages, and attenuation of various types, and instructions on selection, fitting, use, and care.
- The purpose of audiometric testing, and an explanation of the test procedures.

NOISE MONITORING

When operations are anticipated to exceed the 8-hour time-weighted average of 85 decibels, the SSHO shall implement a noise monitoring program. The sampling shall be used to:

- Verify that appropriate hearing protection is being used by employees
- Identify the boundaries of the noise hazard area in accordance with Section 05.C.07 of EM 385-1-1.

Instruments used to measure employee noise exposure shall be calibrated to ensure accuracy.