Appendix F

ADEM Closure Assessment Report for Parcel 137(7), Former Gas Station, Building 2094, at Former Motor Pool Area 2000, Parcel 144(7), Anomalies A-1(1) and A-2(1)

ADEM UST CLOSURE SITE ASSESSMENT REPORT

(Use a Separate form for a group of tanks in each tank pit)

FACILITY I.D. NO.:	NA	DATE OF THIS REPORT:	8/2/00
INCIDENT NO. (If applicable).	UST __ __ - __ __ - __ __	UST OWNER:	U.S. Army
FACILITY COUNTY:	Calhoun	ADDRESS:	Ft. McClellan Anniston, AL
FACILITY NAME:	Parcel 137	CONTACT NAME:	
LOCATION:	A-1(1) & A-2(1)	CONTACT PHONE #:	
ADDRESS:	Ft. McClellan Anniston, AL		

NAME OF CONTRACTOR USED TO CLOSE (REMOVE)	IT Corporation
NAME OF CONSULTANT CONDUCTING ASSESSMENT:	IT Corporation
NAME OF LABORATORY USED:	Severn Trent Laboratories

PRIOR TO BEGINNING CLOSURE, THE CONTRACTOR SHOULD BECOME FAMILIAR WITH ALL CLOSURE PROCEDURES IN AMERICAN PETROLEUM INSTITUTE (API) BULLETIN 1604, "REMOVAL AND DISPOSAL OF USED UNDERGROUND PETROLEUM STORAGE TANKS" AND API BULLETIN 2015 "CLEANING PETROLEUM STORAGE TANKS". THESE API BULLETINS ARE AVAILABLE FROM THE AMERICAN PETROLEUM INSTITUTE.

NUMBER OF TANKS CLOSED:	**TWO**
NUMBER OF TANKS REMAINING AT SITE:	**NONE**
CLOSURE DATE:	**8/18/00**

UNIQUE TANK #:	**A-1(1)**	**A-2(1)**			
TANK SIZE:	**7'-6" x 16'**	**7'-6" x 16'**			
TANK CAPACITY:	**6,000 gal**	**6,000 gal**			
TANK AGE:	**UNK**	**UNK**			
DATE TANK LAST USED:	**UNK**	**UNK**			
SUBSTANCE STORED:	**Gasoline**	**Gasoline**			
TYPE OF PRODUCT PIPING:	**None**	**None**			
(Pressurized/Suction)	**UNK**	**UNK**			
FARM TANK:	☐	☐	☐	☐	☐
HEATING OIL TANK:	☐	☐	☐	☐	☐

1. COMPLETE THE FOLLOWING SECTION FOR ALL CLOSURES:

a. Provide the results of a 500 ft. survey for domestic water supply wells in the following table and place their locations on the attached site map:

Name of Owner of Domestic Water Supply Well	Distance from UST Site	Depth of Well	Status: Active or Inactive?
NONE	NA	NA	NA

b. Provide the results of a 1,000 ft. survey for public water supply wells in the following table and place their locations on the attached site map:

Name of Owner of Public Water Supply Well	Distance from UST Site	Depth of Well	Status: Active or Inactive?
NONE	NA	NA	NA

c. Is the UST site located in a delineated wellhead protection or source water area?

YES ☐ NO ☒

d. Are there any public water supply surface water intakes within 500 ft. of the UST site?

YES ☐ NO ☒

If yes, locate the intake on the attached site map.

NOTE: If an active domestic water supply well or an active public water supply well is located within 500 ft. or 1,000 ft. respectively of the UST site, or if the answer to 1c. or 1d. is Yes, the Department may require groundwater sampling to occur at the UST site. If the groundwater sampling is not performed by the owner/operator during the closure site assessment, the Department may require that groundwater sampling occur as part of a Preliminary Investigation.

Groundwater sampling remains a requirement of the closure site assessment when shallow groundwater is present or when performing an in-place closure site assessment.

e. Indicate the current on-site land use and the most likely future land use:

Current On-Site Land Use			Most Likely Future On-Site Land Use	
Residential	☐		Residential	☐
Commercial	☐		Commercial	☒
Other	☒		Other	☐
Describe: Military Installation (being closed)			Describe:	

f. Describe the current off-site land use within 500 ft of the UST site. State whether the area, in general, is residential, commercial, mixed residential/commercial or other:

North:	Commercial type and unimproved land associated with the military installation

	Northeast:	
	Northwest:	
South:	Commercial type and unimproved land associated with the military installation	
	Southeast:	
	Southwest:	
West:	Commercial type and unimproved land associated with the military installation	
East:	Commercial type and unimproved land associated with the military installation	

COMPLETE THE FOLLOWING SECTIONS AS APPROPRIATE BASED ON THE TYPE OF CLOSURE CONDUCTED:

2. TANK CLOSURE BY REMOVAL:

a. Attach a topographic map showing the location of the facility and a general site map showing the area surrounding the UST site.

b. Attach plan and sectional views of the excavation and include the following:

1. All appropriate excavation dimensions.
2. All soil sample locations and depths using an appropriate method of identification.
3. Location of areas of visible contamination.
4. Former location of tank(s), including depth, with tank Identification Number.

	YES	NO
c. Is the groundwater more than 5 feet below the bottom of the excavation?	☒	☐

If no, provide the depth from the ground surface to the groundwater table. Feet: _____

Indicate method used to determine water table depth:	YES	NO
1. Excavation extended 5 feet below base of pit:	☒	☐
2. Boring or monitoring well:	☐	☐
3. Topographic features (Method must be approved by ADEM prior to use):	☐	☐

	YES	NO
d. Was there a notable odor found in the excavation?	☒	☐

If yes,

(1) The odor strength was (mild) (strong) (other) describe: Mild

(2) The odor indicates what type of product: (gasoline)(diesel) (waste oil) (kerosene) (other) describe: Gasoline/Diesel

	YES	NO
e. Was there water in the excavation?	☐	☒

If yes, how was it handled?	YES	NO
1. One time discharge to sanitary sewer with local approval?	☐	☐
2. Hauled to facility capable of treating constituents of petroleum products in water?	☐	☐
3. Hauled to local POTW with local approval?	☐	☐
4. Treated on-site with NPDES approved discharge?	☐	☐

5. Other? Explain: Left in excavation; no tank present; excavation used as over-dig for pipe trench closure.

	YES	NO
f. Was free product found in the excavation?	☐	☒

If yes,

1. How was free product handled? Describe:

2. What was the measured thickness of free product? _____

g. Were visible holes noted in the tank(s)? YES ☐ NO ☒

If yes,
Indicate which tanks(s) by the Unique Tank Number: _____

Also, describe the location(s) and provide general description as to the size and number of holes for above noted tanks, (Example: 3 square feet of pinholes or 3 inch diameter hole):

_____

h. Describe the soil type and thickness of all soil layers encountered in the excavation:
3" of ASPHALT; 18" of gravelly CLAY (backfill); 11' of Brownish-red silty, sandy, CLAY.
Excavation dimensions approx. 16.5' wide X 11' deep X 43' long to expose and remove both USTs.

i. Was the excavation backfilled? YES ☒ NO ☐

If yes, provide the date of backfilling: 8/28-8/30/00. Backfilled with clean material from the Base.

DO NOT BACKFILL WITH MATERIAL THAT HAS OR POTENTIALLY HAS A TPH OF GREATER THAN 100 PPM!

3. TANK CLOSURE WITHOUT REMOVAL(CLOSED IN-PLACE): N/A

a. Attach a topographic map showing the location of the facility and a general site map showing the area surrounding the UST site.

b. Attach plan and sectional views of the site and include the following:

1. Location of the tank(s) including depth,
2. Location of tank(s) with respect to other tanks, if applicable,
3. Soil boring locations and depths at which soil samples were taken,
4. Boring logs.

c. Attach groundwater sampling data, if required based on depth to groundwater.

d. Is the groundwater more than 5 feet below the bottom of the tank? YES ☐ NO ☐

Provide the depth from the ground surface to the groundwater table. Feet: _____

Refer to Closure Site Assessment Guidance (page 11) for further details regarding requirements for determining groundwater elevation.

e. Was there a notable odor found in the bore holes? YES ☐ NO ☐

If yes,
(1) The odor strength was (mild) (strong) (other) describe: _____

(2) The odor indicates what type of product: (gasoline) (diesel) (waste oil) (kerosene) (other) describe: _____

f. Was free product found in the bore holes? YES ☐ NO ☐

If yes,
1. How was free product handled? Describe: _____

2. What was the measured thickness of free product? _____

g. Describe the soil type and thickness of all soil layers encountered in the bore holes and provide boring logs:

_____

_____

_____

h. Specify the inert solid material used to fill the tank(s):

_____

_____

i. Provide the date the tank(s) were filled: _____

j. Were the bore holes properly sealed with bentonite/soil? YES ☐ NO ☐
If yes, provide the date: _____

4. PRODUCT PIPING CLOSURE BY REMOVAL: No evidence of product piping.

a. Attach a topographic map showing the location of the facility and a general site map showing the area surrounding the UST site.

b. If the piping was longer than 10 feet, attach plan and sectional views of the piping trench and include the following:

1. All appropriate excavation dimensions and length of piping,
2. All soil sample locations and depths using an appropriate method of identification.
3. Location of areas of visible contamination.

c. Was the piping purged of product prior to closure? YES ☐ NO ☐
If yes, was the product properly disposed of? YES ☐ NO ☐

	YES	NO
d. Is the groundwater more than 5 feet below the bottom of the piping trench?	☐	☐

If no, provide the depth from the ground surface to the groundwater table. Feet: _____

Indicate method used to determine water table depth:	YES	NO
1. Excavation extended 5 feet below base of trench:	☐	☐
2. Boring or monitoring well:	☐	☐
3. Topographic features (Method must be approved by ADEM prior to use):	☐	☐

	YES	NO
e. Was there a notable odor found in the piping trench?	☐	☐

If yes,

(1) The odor strength was (mild) (strong) (other) describe: _____

(2) The odor indicates what type of product: (gasoline) (diesel) (waste oil) (kerosene) (other) describe: _____

	YES	NO
f. Was there water in the piping trench?	☐	☐

If yes, how was it handled?	YES	NO
1. One time discharge to sanitary sewer with local approval?	☐	☐
2. Hauled to facility capable of treating constituents of petroleum products in water?	☐	☐
3. Hauled to local POTW with local approval?	☐	☐
4. Treated on-site with NPDES approved discharge?	☐	☐
5. Other? Explain:		

_____

	YES	NO
g. Was free product found in the piping trench?	☐	☐

If yes,

1. How was free product handled? Describe: _____
2. What was the measured thickness of free product? _____

	YES	NO
h. Were visible holes noted in the piping?	☐	☐

If yes, indicate the location(s) and provide a general description as to the size and number of holes:

_____

i. Describe the soil type and thickness of all soil layers encountered in the piping trench:

_____

_____

_____

_____

j. Was the piping trench backfilled? YES ☐ NO ☐

If yes, provide the date of backfilling: _____

DO NOT BACKFILL WITH MATERIAL THAT HAS OR POTENTIALLY HAS A TPH OF GREATER THAN 100 PPM!

5. PRODUCT PIPING CLOSURE WITHOUT REMOVAL (CLOSED IN-PLACE): N/A

a. Attach a topographic map showing the location of the facility and a general site map showing the area surrounding the UST site.

b. Attach plan and sectional views of the site and include the following:

1. Location of the piping including depth,
2. Location of piping with respect to tank(s), if applicable.
3. Soil boring locations and depth at which soil samples were taken,
4. Boring logs.

c. Attach groundwater sampling data, if required based on depth to groundwater.
Refer to Closure Site Assessment Guidance for further details regarding requirements for groundwater sampling.

d. Was the piping purged of product prior to closure? YES ☐ NO ☐
If yes, was product properly disposed of? YES ☐ NO ☐

e. Was the piping capped? YES ☐ NO ☐

f. Is the groundwater more than 5 feet below the bottom of the excavation? YES ☐ NO ☐

Provide the depth from the ground surface to the groundwater table. Feet: _____

Refer to Closure Site Assessment Guidance (page 11) for further details regarding requirements for determining groundwater elevation.

g. Was there a notable odor found in the bore holes? YES ☐ NO ☐

If yes,
(1) The odor strength was (mild) (strong) (other)
describe: _____

(2) The odor indicates what type of product:
(gasoline) (diesel) (waste oil) (kerosene) (other)
describe: _____

h. Was free product found in the bore holes? YES ☐ NO ☐

If yes,

1. How was free product handled? Describe: _____

2. What was the measured thickness of free product? _____

i. Describe the soil type and thickness of all soil layers encountered in the bore holes and provide boring logs:

_____

_____

_____

_____

j. Were the bore holes properly sealed with bentonite/soil? YES ☐ NO ☐

If yes, provide the date: _____

6. GROUNDWATER SAMPLING (If required by attached closure guidelines): Not required.

a. Indicate the following on the plan and section views required by Section 2.b., 3.b, 4.b, or 5.b. above:

1. The location and depth of the 1 up-gradient and 3 down-gradient borings or monitoring wells. (Monitoring wells in lieu of borings are not required, but may be desirable in certain situations.)

2. The most probable direction of groundwater flow. State basis for determining direction:

_____

_____

_____

b. Was a monitoring well used? YES ☐ NO ☐

If yes, attach a schematic drawing of the well(s) and all boring logs.

c. **SUMMARY OF GROUNDWATER SAMPLING RESULTS: N/A**

Date of Sampling: _____

Boring or MW #:							
	mg/l	mg/l	mg/l	mg/l	mg/l	mg/l	mg/l
Benzene							
Ethylbenzene							
Toluene							
Xylenes							
MTBE							
Anthracene							
Benzo(a)anthracene							
Benzo(a)pyrene							
Benzo(b) fluoranthene							
Benzo(k)fluoranthene							
Benzo(g,h,i)perylene							
Chrysene							
Fluoranthene							
Fluorene							
Naphthalene							
Phenanthrene							
Pyrene							
Lead							

Note: Attach additional tables as needed based on number of groundwater samples or variations in sampling dates.

d. Attach the original chain of custody record (**copies are not acceptable**) and the original laboratory data sheet (**copies are not acceptable**) for each sample.

7. SUMMARY OF SOIL ANALYTICAL DATA

a. Provide the analytical data obtained from the site in the following tables:

TANK PIT SAMPLES: Page 1 of 2

Date of Sampling: **8/18/00**

Sample #:	LK0001	LK0002	LK0003	LK0004	LK0005	LK0010	LK0011
Sample Location Anomaly	N wall A-2(1)	E wall A-2(1)	S wall A-2(1)	W wall A-2(1)	Bottom A-2(1)	N wall A-1(1)	E wall A-1(1)
	mg/kg	mg/kg	mg/kg	mg/kg	mg/kg	mg/kg	mg/kg
TPH OPTION:							
TPH							
Lead							
COC OPTION:							
Benzene	ND	ND	ND	ND	ND	ND	ND
Ethylbenzene	ND	ND	ND	ND	ND	ND	ND
Toluene	ND	ND	ND	ND	ND	ND	ND
Xylenes	0.87	0.80	ND	ND	ND	ND	ND
MTBE							
Acenaphthene	0.077J	ND	ND	ND	ND	ND	ND
Acenaphthylene	ND	ND	ND	ND	ND	ND	ND
Anthracene	ND	0.051J	ND	ND	ND	ND	ND
Benzo(a)anthracene	0.25	0.054	ND	0.022	ND	ND	ND
Benzo(a)pyrene	0.25	0.067	ND	0.061	ND	ND	ND
Benzo(b) fluoranthene	0.28	0.073	ND	0.038	ND	ND	ND
Benzo(k)fluoranthene	0.22	0.055	ND	0.034	ND	ND	ND
Benzo(g,h,i)perylene	0.15	0.054	ND	0.058	ND	ND	ND
Chrysene	0.37	0.07	ND	0.037	ND	ND	ND
Dibenz(a,h)anthracene	0.016J	0.0063J	ND	0.0041	ND	ND	ND
Fluoranthene	1.1	0.35	ND	0.06	ND	ND	ND
Fluorene	0.51J	0.11	ND	ND	ND	ND	ND
Indeno(1,2,3-cd)pyrene	0.21	0.068	ND	0.033	ND	ND	ND
Naphthalene	0.91	0.089	ND	ND	ND	ND	ND
Phenanthrene	1.3	0.55	ND	0.023J	ND	ND	ND
Pyrene	0.66	0.14	ND	0.049	ND	ND	ND
Lead	70.2	46.5	39.7	27.7	25.3	30.5	22.3

J – Estimated Result. Result is less than reporting limit.
ND – Analyte not detected above the method detection limit.

Note: Attach additional tables as needed based on number of soil samples or variations in sampling dates.

TANK PIT SAMPLES: Page 2 of 2

Date of Sampling: **8/18/00**

Sample #:	LK0012	LK0013	LK0014				
Sample Location Anomaly	S wall A-1(1)	W wall A-1(1)	Bottom A-1(1)				
	mg/kg	mg/kg	mg/kg	mg/kg	mg/kg	mg/kg	mg/kg
TPH OPTION:							
TPH							
Lead							
COC OPTION:							
Benzene	ND	ND	ND				
Ethylbenzene	0.066	ND	ND				
Toluene	ND	ND	ND				
Xylenes	0.47	ND	190				
MTBE							
Acenaphthene	ND	ND	ND				
Acenaphthylene	ND	ND	ND				
Anthracene	ND	ND	ND				
Benzo(a)anthracene	0.022	0.016	0.0057J				
Benzo(a)pyrene	ND	0.036	0.0034J				
Benzo(b) fluoranthene	ND	0.028	0.0089				
Benzo(k)fluoranthene	ND	0.024	ND				
Benzo(g,h,i)perylene	ND	0.018	ND				
Chrysene	0.031	0.021	0.0089				
Dibenz(a,h)anthracene	ND	0.0047	ND				
Fluoranthene	0.11	0.057	0.018				
Fluorene	0.038J	ND	ND				
Indeno(1,2,3-cd)pyrene	ND	0.027	ND				
Naphthalene	0.085	ND	ND				
Phenanthrene	0.11	0.12	0.045J				
Pyrene	0.055	0.036	0.0084				
Lead	31.4	17.9	44.9				

J – Estimated Result. Result is less than reporting limit.
ND – Analyte not detected above the method detection limit.

Note: Attach additional tables as needed based on number of soil samples or variations in sampling dates.

PIPING & DISPENSER SAMPLES: N/A

Date of
Sampling: _____

Sample #:							
			mg/kg	mg/kg	mg/kg	mg/kg	mg/kg
TPH OPTION:							
TPH							
Lead							
COC OPTION:							
Benzene							
Ethylbenzene							
Toluene							
Xylenes							
MTBE							
Anthracene							
Benzo(a)anthracene							
Benzo(a)pyrene							
Benzo(b) fluoranthene							
Benzo(k)fluoranthene							
Benzo(g,h,i)perylene							
Chrysene							
Fluoranthene							
Fluorene							
Naphthalene							
Phenanthrene							
Pyrene							
Lead							

Note: Attach additional tables as needed based on number of soil samples or variations in sampling dates.

b. Attach the original chain of custody record (**copies are not acceptable**) and the original laboratory data sheet (**copies are not acceptable**) for each sample.

8. EXCAVATED SOIL

ALL EXCAVATED SOIL REQUIRES ANALYSIS PRIOR TO DISPOSAL. TANK CLOSURE SAMPLES FROM THE EXCAVATION MAY NOT BE REPRESENTATIVE OF THE LEVEL OF CONTAMINATION IN THE EXCAVATED SOIL.

For safety and other considerations, it is recommended that open pits and piping trenches should be backfilled as soon as possible with **clean backfill**. **Soils which have TPH levels greater than 100 ppm or soils for which the level of contamination has not been determined shall not be returned to the excavation pit(s) or piping trenches**.

a. If **tank** was closed by removal, provide an estimate of the volume of soil removed: 65 cubic yds

b. Provide a summary of analytical results for the excavated soil:

Date of Sampling: **8/18/00**

Sample #	TPH Results mg/kg	Lead Results (If applicable) mg/kg
LK8001	76	10.8
LK8003	131	48.8
LK8004	65	13.0

Note: Attach additional tables as needed based on number of soil sample or variations in sampling dates.

c. Attach the original chain of custody record (**copies are not acceptable**) and the original laboratory data sheet (**copies are not acceptable**) for each sample.

d. Attach the "Total Potential VOC Emissions Calculations" for soil removed.

e. Indicate current method and location of soil management and/or treatment prior to final disposal:

f. Check the method of soil disposal used or to be used:

- ☐ Return to the excavation pit only when TPH is less than or equal to 100 ppm and depth of groundwater is greater than 5 feet from the base of the pit.
- ☐ Spread in a thin layer (6" or less) on site only when TPH is less than or equal to 100 ppm
- ☒ Disposal in a landfill (See attached "Guidelines for the Disposal of Non-Hazardous Petroleum Contaminated Wastes").
- ☐ Incineration.
- ☐ Thermal volatilization.
- ☐ Recycling facility
- ☐ Other _____

g. If soil was disposed of prior to the submittal of this form, indicate the final destination below and attach copies of invoices, receipts, and "certificate of burn" (if soil was incinerated):
Three Corners Regional Landfill, 2205 County Rd 6, Piedmont, Alabama
Soil from Parcels 16(7), 132(7), and 137(7) was disposed of at the same time,
as indicated on the attached manifest.

9. TANK CLEANING

	YES	NO
a. The tank(s) were cleaned in accordance with American Petroleum Institute (API) Bulletin 2015 "Cleaning Petroleum Storage Tanks"?	☐	☒

If no, describe how tank(s) were cleaned:
Tanks were full of water. Samples of the contents indicated the water was nonhazardous.

b. Provide an estimate of the volume of sludge removed from the tank: 0 Gallons

c. Indicate the final destination of the sludge and attach invoices or receipts: NA

10. ATTACHMENTS

Attach the following to the closure form in the following order as applicable to the type of closure site assessment performed. Check each box to indicate that a particular map or information is attached to the closure site assessment form. The section of the closure site assessment form that indicates the required attachment is shown.

☒	Topographic Map showing location of site (Section 2.a., 3.a., 4.a., & 5.a.)	
☒	Area map showing general location of the site. Include land use on-site and within 500' of site. (Section 1)	
	☐	Include locations of domestic and public water supply wells, and surface water intakes (Section 1)
☒	Plan and sectional views of the site including the following: (Section 2.b., 3.b., 4.b., & 5.b.)	
	☐	Location of the closed tanks and piping including depth. Include any remaining tanks or piping at site. Include tank identification numbers.
	☐	Excavation dimensions of the tank system
	☒	Locations of soil samples taken for piping and tank which includes the analytical results.
	☐	Location of areas of visible contamination
	☐	Location of any stockpiled excavated soil
	☐	Location of soil borings for an in-place closure
☐	The location and depth of the one up-gradient and 3 down-gradient borings or monitoring wells (Section 6.a.)	
☐	Map illustrating the most probable direction of groundwater flow (Section 6.a.)	
☐	Schematic diagrams of the monitoring wells installed (Section 6.b.)	
☐	Boring logs of soil borings (Section 3.b., 5.b. &6.b.)	
☐	Site Classification Checklist	
☐	**Invoices and/or receipts for sludge disposal (Section 9.c.)**	
☒	Invoices, manifests and certificates of burn or disposal for soil disposal (Section 8.f.)	

☒	Attach the **original** chain of custody record (copies are not acceptable) for each sample which includes at least the following: (Sections 6.d., 7.b., & 8.c.)	
	☒	Sample identification number,
	☒	Date and time sample was taken,
	☒	Name and title of person collecting sample (see certification requirement on page 15 of this form),
	☒	Type of sample (soil or water),
	☒	Type of sample container,
	☒	Method of preservation,
	☒	Date and time sample was relinquished,
	☒	Person relinquishing sample,
	☒	Date and time sample was received by lab,
	☒	Person receiving sample at lab.

☒	Attach the **original** laboratory data sheet (**copies are not acceptable**) which includes at least the following: (Sections 6.d., 7.b., & 8.c.)	
	☒	A sample identification number which can be cross referenced with the soil sample locations indicated on the plan and sectional views required by Section 2.b., 3.b., 4.b., or 5.b. above
	☒	The sample analytical results with appropriate units,
	☒	The method used to analyze each sample,
	☒	The date and time the sample was analyzed,
	☒	The person analyzing the sample.

11. SIGNATURES

This form should be completed, signed, and returned, along with any other pertinent information, to the following address:

The Alabama Department of Environmental Management
Groundwater Branch
Post Office Box 301463
Montgomery, AL 36130-1463
(334) 270-5655

INCOMPLETE FORMS WILL BE RETURNED FOR CORRECTION.

Name of person taking soil and/or groundwater samples: James R. Messer

Company: IT Corporation

Telephone Number: 256-848-3499

I certify under penalty of law that I have obtained representative soil and/or groundwater samples using accepted sampling procedures.

Signature: _____ Date: _____

Either a Geologist or an Alabama Registered Professional Engineer must sign this form:

I certify under penalty of law that I have performed this closure site assessment in accordance with accepted soil and groundwater investigation practices; I am either a Geologist or an Alabama Registered Professional Engineer; I am experienced in soil and groundwater investigations; and the information I have submitted, to the best of my knowledge and belief, is true, accurate, and complete.

Signature of Geologist: _____ Date: _____

Signature of Alabama Registered Professional Engineer: David B. Tester, P.E. Date: 10/19/01

Alabama P.E. Registration Number: 23633

I certify under penalty of law that I have personally examined and am familiar with the information submitted in this and all attached documents and that based on those individuals immediately responsible for obtaining the information, I believe that the submitted information is true, accurate, and complete.

Signature of Tank Owner: _____ Date: _____

FOR ADEM USE ONLY:

Reviewed By: _____ Date: _____

COMMENTS:

_____
_____
_____
_____
_____
_____
_____
_____
_____
_____
_____
_____

FORM 1133
11/05/97

FOR ADEM OFFICE USE ONLY	
TO: Air Division	FROM: UST Compliance Section

ADEM UST CLOSURE
TOTAL POTENTIAL VOC EMISSIONS CALCULATIONS

FACILITY I.D. NO.:	NA	DATE OF THIS REPORT:	8/18/00
INCIDENT NO. (If applicable).	UST __ __ - __ __ - __ __	UST OWNER:	U.S. Army
FACILITY COUNTY:	Calhoun	ADDRESS:	Ft. McClellan Anniston, AL
FACILITY NAME:	Parcel 137	CONTACT NAME:	
LOCATION:	A-1(1) & A-2(1)	CONTACT PHONE #:	
ADDRESS:	Ft. McClellan Anniston, AL		

Name of Consultant who performed calculations: James R. Messer
Consultant's Phone Number: 256-848-3499

	a	ppm x	b	cyds x .002 =	c	lbs. VOC emissions
Sample 1	76	ppm x	21	cyds x .002 =	3.192	lbs. VOC emissions
Sample 2	131	ppm x	21	cyds x .002 =	5.502	lbs. VOC emissions
Sample 3	65	ppm x	21	cyds x .002 =	2.73	lbs. VOC emissions
Sample 4		ppm x		cyds x .002 =		lbs. VOC emissions
Sample 5		ppm x		cyds x .002 =		lbs. VOC emissions
Sample 6		ppm x		cyds x .002 =		lbs. VOC emissions
Sample 7		ppm x		cyds x .002 =		lbs. VOC emissions
Sample 8		ppm x		cyds x .002 =		lbs. VOC emissions
Sample 9		ppm x		cyds x .002 =		lbs. VOC emissions
Sample 10		ppm x		cyds x .002 =		lbs. VOC emissions
Sample 11		ppm x		cyds x .002 =		lbs. VOC emissions
Sample 12		ppm x		cyds x .002 =		lbs. VOC emissions
Sample 13		ppm x		cyds x .002 =		lbs. VOC emissions
Sample 14		ppm x		cyds x .002 =		lbs. VOC emissions
Sample 15		ppm x		cyds x .002 =		lbs. VOC emissions

TOTAL POTENTIAL EMISSIONS = 11.424 lbs. VOC emissions

*** NOTE - If more samples are taken than indicated on this form, please attach additional pages as necessary.**
This form must be completed and submitted with the ADEM UST Closure Site Assessment Report Form.

FIGURES

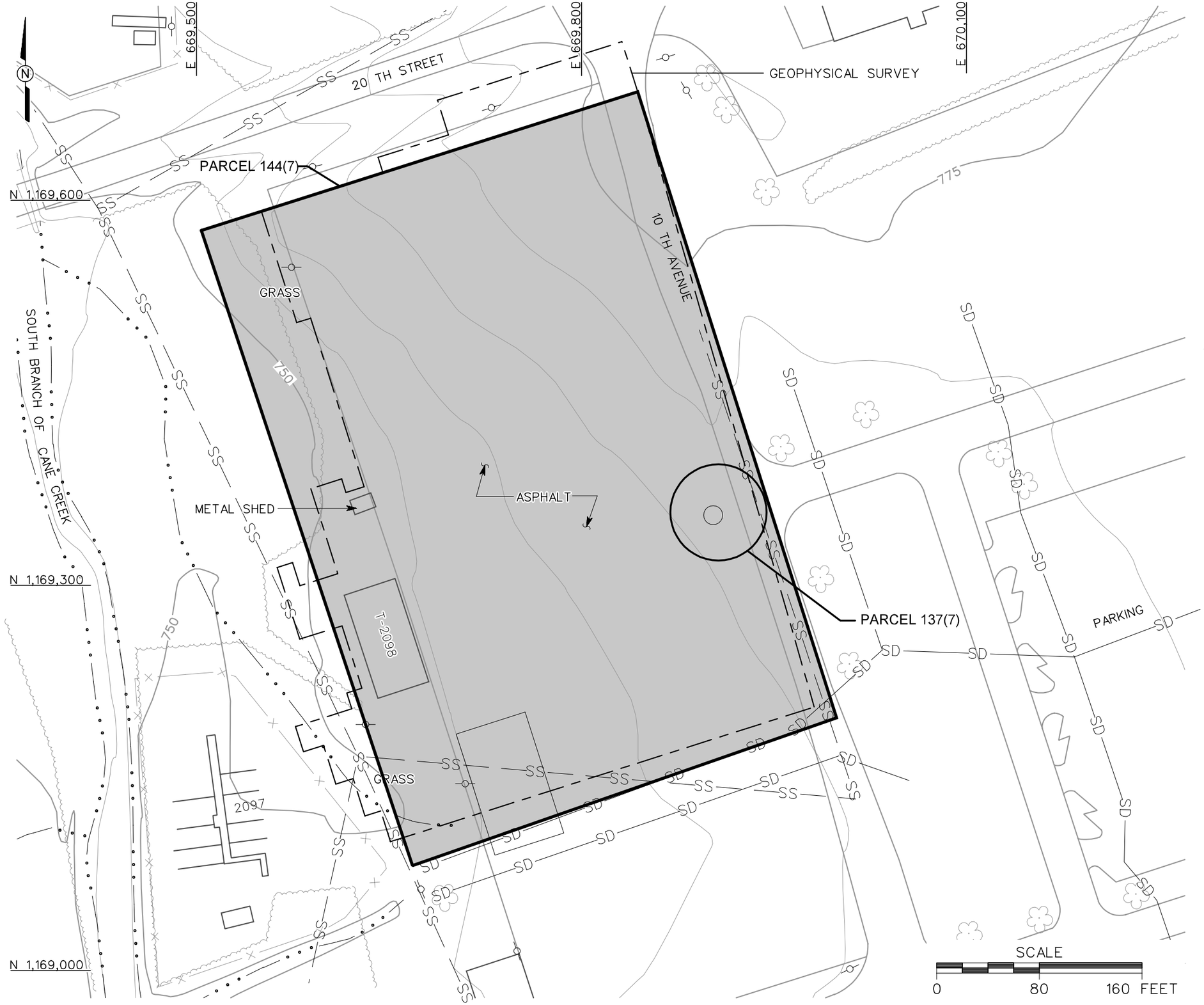

LEGEND

- UNIMPROVED ROADS AND PARKING
- PAVED ROADS AND PARKING
- BUILDING
- TOPOGRAPHIC CONTOURS (CONTOUR INTERVAL - 5 FOOT)
- TREES / TREELINE
- PARCEL BOUNDARY
- EXTENT OF GEOPHYSICAL SURVEY
- SURFACE DRAINAGE / CREEK
- FENCE
- UTILITY POLE
- SS — SANITARY SEWER LINE
- SD — STORM DRAINAGE LINE

NOTES:

1. POTENTIAL UST LOCATION MARKED IN THE FIELD.
2. SITE FEATURES FOUND ON THIS MAP ARE UNCHECKED; FOR ACCURATE SITE INFORMATION TO RECONSTRUCT UST LOCATION, USE GEOPHYSICS SITE MAP.

FIGURE F-1
SITE MAP, PARCEL 137(7)
FORMER GAS STATION,
BUILDING 2094
AT FORMER MOTOR POOL
AREA 2000, PARCEL 144(7)

U. S. ARMY CORPS OF ENGINEERS
MOBILE DISTRICT
FORT McCLELLAN
CALHOUN COUNTY, ALABAMA
Contract No. DACA21-96-D-0018

IT CORPORATION
A Member of The IT Group

DWG. NO.: ...\783149es.167 | PROJ. NO.: 783149
INITIATOR: J. BOND | PROJ. MGR.: J. YACOUB
DRAFT. CHCK. BY: | ENGR. CHCK. BY: J. JENKINS
DATE LAST REV.: | DRAWN BY:
STARTING DATE: 02/13/01 | DRAWN BY: D. BOMAR
02/13/01 01:54:11 DBILLING c:\cadd\design\783149es.167

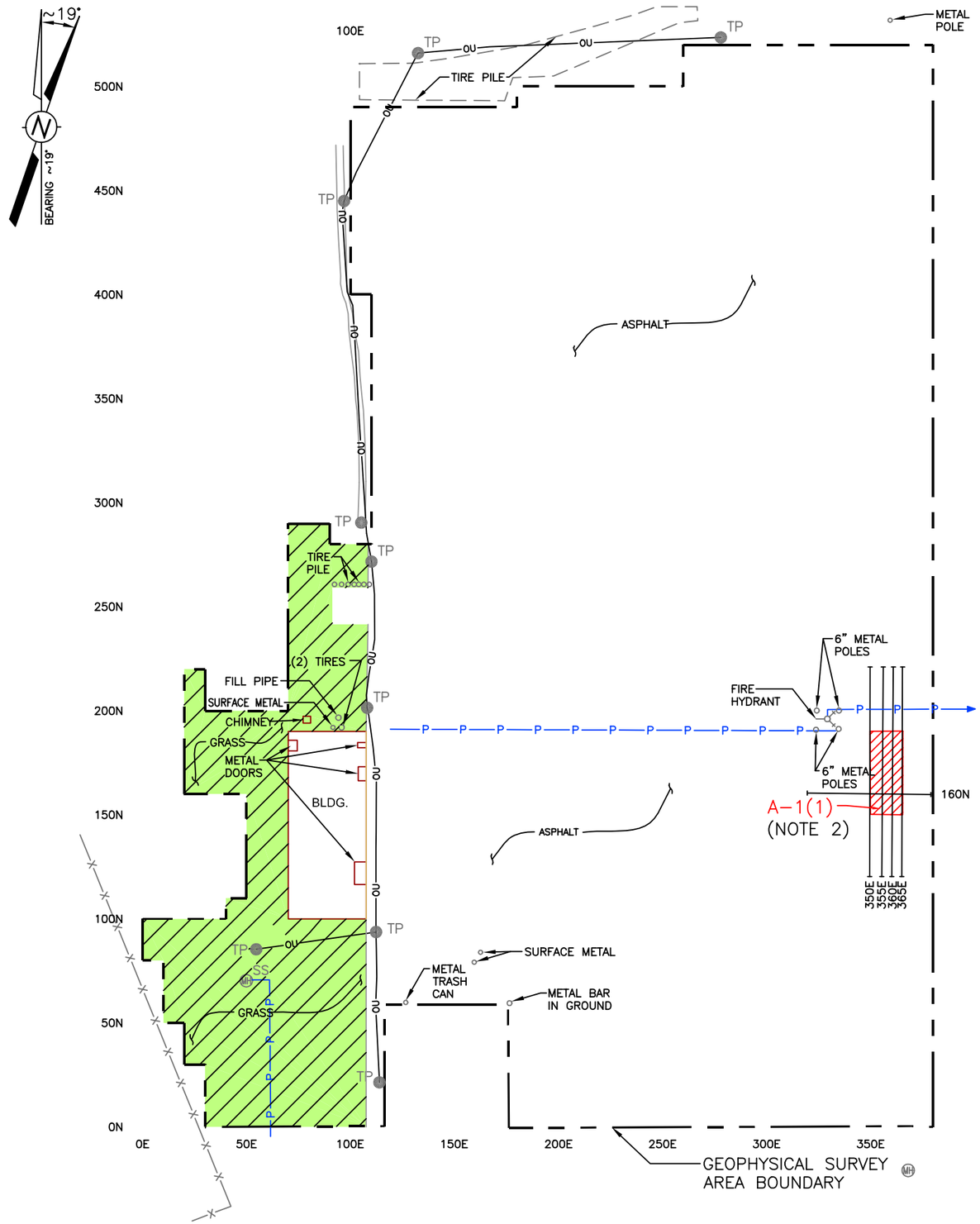

LEGEND

A-1(1)	GEOPHYSICAL ANOMALY
TP	TELEPHONE POLE
MH	MANHOLE
SS	MANHOLE (SANITARY SEWER)
	FIRE HYDRANT
OU	OVERHEAD UTILITIES
X	FENCE
P	LOCATION OF BURIED PIPE OR UTILITY
360E	GPR PROFILES PRESENTED
N 1,169,175 E 669,634	ALABAMA EAST STATE PLANE COORDINATES (NAD83)

NOTES: 1) LOCATIONS OF FEATURES OUTSIDE SURVEY AREA ARE APPROXIMATE.

2) TWO USTs WERE FOUND. SECOND UST WAS LABELED A-2(1). REFER TO FIGURE F-3 FOR A DETAILED SKETCH OF THE UST EXCAVATION AND SAMPLE LOCATIONS.

SCALE: 1"=60'

0 20 40 60 120 FEET

FIGURE F-2
SITE MAP WITH UST LOCATIONS AND GEOPHYSICAL INTERPRETATION
PARCEL 137(7), FORMER GAS STATION, BUILDING 2094, AT FORMER MOTOR POOL AREA 2000, PARCEL 144(7)

U.S. ARMY CORPS OF ENGINEERS
MOBILE DISTRICT
FORT McCLELLAN
CALHOUN COUNTY, ALABAMA
Contract No. DACA21-96-D-0018

IT CORPORATION
A Member of The IT Group

DRAWN BY	MSN 02/13/01	CHECKED BY MM	APPROVED BY JH	DRAWING NUMBER 783149-168.DWG

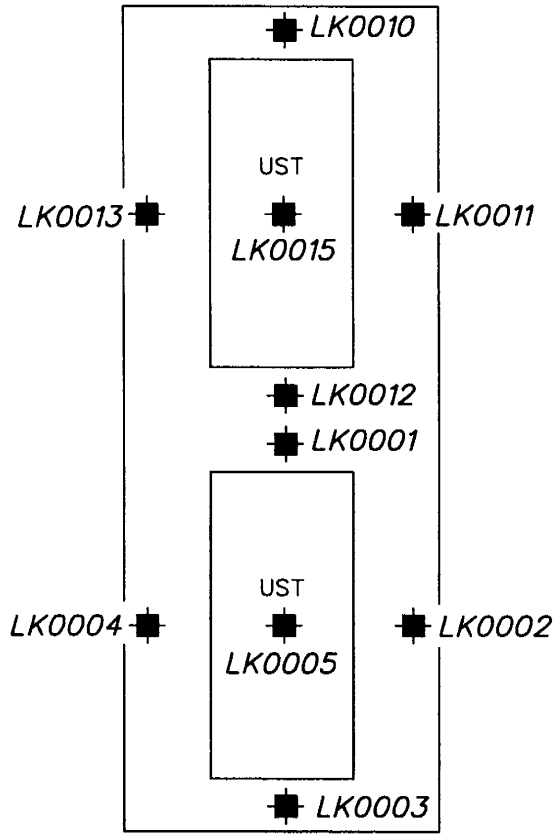

LEGEND:

SOIL SAMPLE LOCATION

NOTE:

1. BOTH USTs WERE 6,000-GAL. CAPACITY.

SCALE

0 10 20 FEET

FIGURE F-3

SKETCH OF EXCAVATION AND SOIL SAMPLE LOCATIONS, PARCEL 137(7)
FORMER GAS STATION
BUILDING 2094 AT FORMER MOTOR POOL AREA 2000
PARCEL 144(7)

U. S. ARMY CORPS OF ENGINEERS
MOBILE DISTRICT
FORT McCLELLAN
CALHOUN COUNTY, ALABAMA
Contract No. DACA21-96-D-0018

IT CORPORATION
A Member of The IT Group

STARTING DATE: 02/13/01	DATE LAST REV.:	DRAFT. CHCK. BY:	INITIATOR: J. BOND
DRAWN BY: D. BOMAR	DRAWN BY:	ENGR. CHCK. BY: J. JENKINS	PROJ. MGR.: J. YACOUB
			DWG. NO.: ...\783149es.171
			PROJ. NO.: 783149

02/14/01 04:20:32 PM DBILLING c:\cadd\design\783149es.171

UST REMOVAL PHOTOGRAPHS

Photo 1: Anomaly A-1(1). Pre-dig conditions. Facing southwest.

Photo 2: Anomaly A-1(1). 6,000-gallon capacity UST. Facing southeast.

Photo 3: Anomaly A-1(1). Removal of UST. Facing south.

Photo 4: Anomaly A-2(1). Excavation of second 6,000-gallon capacity UST. Facing southeast.

Photo 5: Anomaly A-2(1). Removal of second 6,000-gallon capacity UST. Facing east.

Photo 6: Anomaly A-2(1). Excavation extended to 5-feet below the bottom of the UST. Note no water in the excavation.

Photo 7: Anomalies A-1(1) & A-2(1). Backfilling in lifts with clean material. Facing southeast.

Photo 8: Anomalies A-1(1) & A-2(1). Backfilled excavation. Facing southeast.

SOIL DISPOSAL MANIFEST

WASTE MANAGEMENT

GENERATOR'S WASTE PROFILE SHEET

PLEASE PRINT IN INK OR TYPE

Service Agreement on File? ☐YES ☐NO

☐Hazardous ☒Non-Hazardous ☐TSCA

Profile Number: CR 8218

Renewal Date: / /

A. Waste Generator Information

1. Generator Name: Environmental Office
2. SIC Code: 9711
3. Facility Street Address: Bldg. 215, 15th Street
4. Phone: (256) 848-3499
5. Facility City: Fort McClellan
6. State/Province: Alabama
7. Zip/Postal Code: 36205
8. Generator USEPA/Federal ID #: AL4210020562
9. County: Calhoun
10. State/Province ID #:
11. Customer Name: M+M Chemical
12. Customer Phone: (256) 538-3800
13. Customer Contact: Angela Koury
14. Customer Fax: 256-538-1836
15. Billing Address 1279 Valley Drive, Athalla, AL 35954 ☐Same as above

B. Waste Stream Information

1. **Description**

a. Name of Waste: Soil

b. Process Generating Waste: Soil from UST Removal - Exempt.

c. Color	d. Strong odor (describe):	e. Physical state @ 70°F	f. Layers	g. Free liquid range
Dark	mild - dirt	☒Solid ☐Liquid ☐Gas ☐Sludge ☐Other	☒Single Layer ☐Multi-layer	Ø to Ø %
				h. pH: Range to %

i. Liquid Flash Point: ☐<73°F ☐73-99°F ☐100-139°F ☐140-199°F ☐≥ 200°F ☒Not applicable

j. Chemical Composition (List all constituents [including halogenated organics, debris, and UHC's] present in any concentration and submit representative analysis):

Constituents	Concentration Range	Constituents	Concentration Range
Soil	100%		

TOTAL COMPOSITION MUST EQUAL OR EXCEED 100%

k. ☐Oxidizer ☐Pyrophoric ☐Explosive ☐Radioactive ☐Carcinogen ☐Infectious ☐Shock Sensitive ☐Water Reactive

l. Does the waste represented by this profile contain any of the carcinogens which require OSHA notification? (list in Section B.1.j) ☐YES ☒NO

m. Does the waste represented by this profile contain dioxins? (list in Section B.1.j) ☐YES ☒NO

n. Does the waste represented by this profile contain asbestos? ☐YES ☒NO
If yes ☐friable ☐non-friable

o. Does the waste represented by this profile contain benzene? ☐YES ☒NO
If yes, concentration _____ ppm
Is the waste subject to the benzene waste operations NESHAP? ☐YES ☒NO

p. Is the waste subject to RCRA Subpart CC controls? ☐YES ☒NO
If no, does the waste meet the organic LDR Exemption? ☒YES ☐NO
If no, does the waste contain <500 ppmw volatile organic (VO)? ☒YES ☐NO
Volatile organic concentration <1360 ppmw

q. Does the waste contain any Class I or Class II ozone-depleting substances? ☐YES ☒NO

r. Does the waste contain debris? (list in Section B.1.j) ☐YES ☒NO

s. Is the waste subject to controls as a Group 1 wastewater or residual under the HON? ☐YES ☒NO
If yes, is it a Table 8 _____ or Table 9 _____ compound?

2. **Quantity of Waste**
Estimated Annual Volume 160 ☐Tons ☒Yards ☐Drums ☐Other (specify) _____

3. **Shipping Information**
a. Packaging:
☒Bulk Solid; Type/Size: 20 cubic yard box ☐Bulk Liquid; Type/Size: _____
☐Drum; Type; Size: _____ ☐Other: _____

WASTE MANAGEMENT

GENERATOR'S WASTE PROFILE SHEET

PLEASE PRINT IN INK OR TYPE

b. Shipping Frequency: Units _____ Per: ☐Month ☐Quarter ☐Year ☒One time ☐Other _____

c. Is this a U.S. Department of Transportation (USDOT) Hazardous Material? (If no, skip d, e, and f) ..... ☐YES ☒NO

d. Reportable Quantity (lbs.; kgs.): _____ e. Hazard Class/ID #: _____

f. USDOT Shipping Name: Non-Hazardous, Non-Regulated Solid

g. Personal Protective Equipment Requirements: _____

h. Transporter/Transfer Station: _____

C. Generator's Certification (Please check appropriate responses, sign, and date below.)

1. Is this a USEPA hazardous waste (40 CFR Part 261)? If the answer is no, skip to 2 ..... ☐YES ☒NO
   a. If yes, identify ALL USEPA listed and characteristic waste code numbers (D, F, K, P, U) _____
   b. If a characteristic hazardous waste, do underlying hazardous constituents (UHCs) apply? (if yes, list in Section B.1.j) ..... ☐YES ☐NO
   c. Does this waste contain debris? (If yes, list size and type in Chemical Composition - B.1.) ..... ☐YES ☐NO

2. Is this a state hazardous waste? ..... ☐YES ☒NO
   Identify ALL state hazardous waste codes _____

3. Is the waste from a CERCLA (40 CFR 300, Appendix B) or state mandated clean-up? ..... ☐YES ☒NO
   If yes, attach Record of Decision (ROD), 104/106 or 122 order or court order that governs site clean-up activity. For state mandated clean-up provide relevant documentation.

4. Does the waste represented by this waste profile sheet contain radioactive material, or is disposal regulated by the Nuclear Regulatory Commission? ..... ☐YES ☒NO

5. Does the waste represented by this waste profile sheet contain concentrations of Polychlorinated Biphenyls (PCBs) regulated by 40 CFR 761? (If yes, list in Chemical Composition - B.1.j) ..... ☐YES ☒NO
   a. If yes, were the PCBs imported into the U.S.? ..... ☐YES ☐NO

6. Do the waste profile sheet and all attachments contain true and accurate descriptions of the waste material, and has all relevant information within the possession of the Generator regarding known or suspected hazards pertaining to the waste been disclosed to the Contractor? ..... ☒YES ☐NO

7. Will all changes which occur in the character of the waste be identified by the Generator and disclosed to the Contractor prior to providing the waste to the Contractor? ..... ☒YES ☐NO

☒Check here if a Certificate of Destruction or Disposal is required.

Any sample submitted is representative as defined in 40 CFR 261 - Appendix I or by using an equivalent method. I authorize WM to obtain a sample from any waste shipment for purposes of recertification. If this certification is made by a broker, the undersigned signs as authorized agent of the generator and has confirmed the information contained in this Profile Sheet from information provided by the generator and additional information as it has determined to be reasonably necessary. If approved for management, Contractor has all the necessary permits and licenses for the waste that has been characterized and identified by this approved profile.

Certification Signature: Luther Owen Title: Natural Resource Special

Name (Type or Print): Luther Owen Company Name: Fort McClellan, AL Date: 7 Sept 00

☒Check if additional information is attached. Indicate the number of attached pages 18

D. WM Management's Decision — FOR WM USE ONLY

1. Management Method ☐Landfill ☐Non-hazardous Solidification ☐Bioremediation ☐Incineration ☐Hazardous Stabilization ☐Other (Specify) _____
2. Proposed Ultimate Management Facility: _____
3. Precautions, Special Handling Procedures, or Limitation on Approval: _____

4. Waste Form _____ 5. Source _____ 6. System Type _____

Special Waste Decision ..... ☐Approved ☐Disapproved

Salesperson's Signature: _____ Date: _____

Division Approval Signature (Optional): _____ Date: _____

Special Waste Approvals Person Signature: Date:

NON-HAZARDOUS MANIFEST

WASTE MANAGEMENT

Please print or type. *(Form designed for use on elite (12-pitch) typewriter.)*

NON-HAZARDOUS MANIFEST

1. Generator's US EPA ID No. N/A
Manifest Document No. 004003

2. Page 1 of 1

3. Generator's Name and Mailing Address
ENVIRONMENTAL OFFICE
BUILDING 215 15TH STREET
FORT MCCLELLAN, AL 36205

4. Generator's Phone 256 848-3499

A. Manifest Number WMNA 141043

B. State Generator's ID

5. Transporter 1 Company Name
Vicki Griffin Trucking

6. US EPA ID Number

C. State Transporter's ID

D. Transporter's Phone

7. Transporter 2 Company Name

8. US EPA ID Number

E. State Transporter's ID

F. Transporter's Phone

9. Designated Facility Name and Site Address
THREE CORNERS REGIONAL LANDFILL
2205 COUNTY ROAD 6
PIEDMONT, AL 36272

10. US EPA ID Number 1002000000000

G. State Facility's ID

H. Facility's Phone 256/447-1881

GENERATOR

11. Description of Waste Materials	12. Containers No.	Type	13. Total Quantity	14. Unit Wt./Vol.	I. Misc. Comments
a. SOIL WM Profile # C8521B			65+- 40000	LBS	NH
b. WM Profile #					
c. WM Profile #					
d. WM Profile #					

J. Additional Descriptions for Materials Listed Above

Landfill_____ Solidification_____

Bio Remediation_____

K. Disposal Location

Cell Level

Grid

15. Special Handling Instructions and Additional Information

Purchase Order #

EMERGENCY CONTACT:

16. GENERATOR'S CERTIFICATION:

I hereby certify that the above-described materials are not hazardous wastes as defined by 40 CFR Part 261 or any applicable state law, have been fully and accurately described, classified and packaged, and are in proper condition for transportation according to applicable regulations.

Printed/Typed Name: Luther Owen
Signature: On behalf of [signature]
Month Day Year: 09/27/00

TRANSPORTER

17. Transporter 1 Acknowledgement of Receipt of Materials

Printed/Typed Name: JIMMY CRAMER
Signature: [signature]
Month Day Year: 9/1/00

18. Transporter 2 Acknowledgement of Receipt of Materials

Printed/Typed Name
Signature
Month Day Year

FACILITY

19. Certificate of Final Treatment/Disposal

I certify, on behalf of the above listed treatment facility, that to the best of my knowledge, the above-described waste was managed in compliance with all applicable laws, regulations, permits and licenses on the dates listed above.

20. Facility Owner or Operator: Certificateion of receipt of non-hazardous materials covered by this manifest.

Printed/Typed Name
Signature
Month Day Year

NON-HAZARDOUS MANIFEST

WASTE MANAGEMENT

Please print or type. *(Form designed for use on elite (12-pitch) typewriter.)*

NON-HAZARDOUS MANIFEST

1. Generator's US EPA ID No. N/A
Manifest Document No. 00404

2. Page 1 of 1

3. Generator's Name and Mailing Address
ENVIRONMENTAL OFFICE
BUILDING 215 15TH STREET
FORT MCCLELLAN, AL 36205

4. Generator's Phone 256 848-3499

A. Manifest Number WMNA 141044

B. State Generator's ID

5. Transporter 1 Company Name
Vicki Griffin Trucking

6. US EPA ID Number

C. State Transporter's ID

D. Transporter's Phone

7. Transporter 2 Company Name

8. US EPA ID Number

E. State Transporter's ID

F. Transporter's Phone

9. Designated Facility Name and Site Address
THREE CORNERS REGIONAL LANDFILL
2205 COUNTY ROAD 6
PIEDMONT, AL 36272

10. US EPA ID Number 1 0 0 2 0 0 0 0 0 0 0 0

G. State Facility's ID

H. Facility's Phone 256/447-1881

GENERATOR

11. Description of Waste Materials	12. Containers No.	Type	13. Total Quantity	14. Unit Wt./Vol.	I. Misc. Comments
a. SOIL WM Profile # C88218			ESt. 4000	lbs.	NH
b. WM Profile #					
c. WM Profile #					
d. WM Profile #					

J. Additional Descriptions for Materials Listed Above

Landfill_____ Solidification_____

Bio Remediation_____

K. Disposal Location

Cell Level

Grid

15. Special Handling Instructions and Additional Information

Purchase Order # EMERGENCY CONTACT:

16. GENERATOR'S CERTIFICATION:

I hereby certify that the above-described materials are not hazardous wastes as defined by 40 CFR Part 261 or any applicable state law, have been fully and accurately described, classified and packaged, and are in proper condition for transportation according to applicable regulations.

Printed/Typed Name: Luther Owen | Signature "On behalf of" | Month Day Year 09/18/00

TRANSPORTER

17. Transporter 1 Acknowledgement of Receipt of Materials

Printed/Typed Name: Chad Griffin | Signature: Chad Griffin | Month Day Year 09/18/00

18. Transporter 2 Acknowledgement of Receipt of Materials

Printed/Typed Name | Signature | Month Day Year

FACILITY

19. Certificate of Final Treatment/Disposal

I certify, on behalf of the above listed treatment facility, that to the best of my knowledge, the above-described waste was managed in compliance with all applicable laws, regulations, permits and licenses on the dates listed above.

20. Facility Owner or Operator: Certificateion of receipt of non-hazardous materials covered by this manifest.

Printed/Typed Name | Signature | Month Day Year

GENERATOR #1 COPY

NON-HAZARDOUS MANIFEST

WASTE MANAGEMENT

Please print or type. *(Form designed for use on elite (12-pitch) typewriter.)*

NON-HAZARDOUS MANIFEST

1. Generator's US EPA ID No. N/A
Manifest Document No. 00405
2. Page 1 of 1

3. Generator's Name and Mailing Address
ENVIRONMENTAL OFFICE
BUILDING 215 15TH STREET
FORT MCCLELLAN, AL 36205

A. Manifest Number WMNA 141045

B. State Generator's ID

4. Generator's Phone 256 848-3499

5. Transporter 1 Company Name VICKI GRIFFIN TRUCKING
6. US EPA ID Number

C. State Transporter's ID

D. Transporter's Phone

7. Transporter 2 Company Name
8. US EPA ID Number

E. State Transporter's ID

F. Transporter's Phone

9. Designated Facility Name and Site Address
THREE CORNERS REGIONAL LANDFILL
2205 COUNTY ROAD 6
PIEDMONT, AL 36272
10. US EPA ID Number 1002000000000

G. State Facility's ID

H. Facility's Phone 256/447-1881

GENERATOR

11. Description of Waste Materials	12. Containers No.	Type	13. Total Quantity	14. Unit Wt./Vol.	I. Misc. Comments
a. SOIL WM Profile # C88218			Est 40000	LBS	NH
b. WM Profile #					
c. WM Profile #					
d. WM Profile #					

J. Additional Descriptions for Materials Listed Above

Landfill_____ Solidification_____

Bio Remediation_____

K. Disposal Location

Cell Level

Grid

15. Special Handling Instructions and Additional Information

Purchase Order # EMERGENCY CONTACT:

16. GENERATOR'S CERTIFICATION:

I hereby certify that the above-described materials are not hazardous wastes as defined by 40 CFR Part 261 or any applicable state law, have been fully and accurately described, classified and packaged, and are in proper condition for transportation according to applicable regulations.

Printed/Typed Name Luther Owen | Signature "On Behalf of" [signature] | Month Day Year 09/18/00

TRANSPORTER

17. Transporter 1 Acknowledgement of Receipt of Materials

Printed/Typed Name Michael Peterson | Signature [signature] | Month Day Year 09/18/00

18. Transporter 2 Acknowledgement of Receipt of Materials

Printed/Typed Name | Signature | Month Day Year

FACILITY

19. Certificate of Final Treatment/Disposal

I certify, on behalf of the above listed treatment facility, that to the best of my knowledge, the above-described waste was managed in compliance with all applicable laws, regulations, permits and licenses on the dates listed above.

20. Facility Owner or Operator: Certificateion of receipt of non-hazardous materials covered by this manifest.

Printed/Typed Name | Signature | Month Day Year

NON-HAZARDOUS MANIFEST

WASTE MANAGEMENT

Please print or type. *(Form designed for use on elite (12-pitch) typewriter.)*

NON-HAZARDOUS MANIFEST

1. Generator's US EPA ID No. N/A
Manifest Document No. 004016

2. Page 1 of 1

3. Generator's Name and Mailing Address
ENVIRONMENTAL OFFICE
BUILDING 215 15TH STREET
FORT MCCLELLAN, AL 36205

4. Generator's Phone 256 848-3499

A. Manifest Number WMNA 141046

B. State Generator's ID

5. Transporter 1 Company Name
Vicki Griffin Trucking

6. US EPA ID Number

C. State Transporter's ID

D. Transporter's Phone

7. Transporter 2 Company Name

8. US EPA ID Number

E. State Transporter's ID

F. Transporter's Phone

9. Designated Facility Name and Site Address
THREE CORNERS REGIONAL LANDFILL
2205 COUNTY ROAD 6
PIEDMONT, AL 36272

10. US EPA ID Number 1002000000000

G. State Facility's ID

H. Facility's Phone 256/447-1881

GENERATOR

11. Description of Waste Materials	12. Containers No.	Type	13. Total Quantity	14. Unit Wt./Vol.	I. Misc. Comments
a. SOIL WM Profile # 138218			Est. 42000	lbs	NH
b. WM Profile #					
c. WM Profile #					
d. WM Profile #					

J. Additional Descriptions for Materials Listed Above

Landfill_____ Solidification_____

Bio Remediation_____

K. Disposal Location

Cell Level

Grid

15. Special Handling Instructions and Additional Information

Purchase Order # EMERGENCY CONTACT:

16. GENERATOR'S CERTIFICATION:

I hereby certify that the above-described materials are not hazardous wastes as defined by 40 CFR Part 261 or any applicable state law, have been fully and accurately described, classified and packaged, and are in proper condition for transportation according to applicable regulations.

Printed/Typed Name: Luther Owen | Signature "On behalf of" Luther Owen | Month Day Year 09/18/00

TRANSPORTER

17. Transporter 1 Acknowledgement of Receipt of Materials

Printed/Typed Name: Jimmy Cromer | Signature | Month Day Year 09/18/00

18. Transporter 2 Acknowledgement of Receipt of Materials

Printed/Typed Name | Signature | Month Day Year

FACILITY

19. Certificate of Final Treatment/Disposal

I certify, on behalf of the above listed treatment facility, that to the best of my knowledge, the above-described waste was managed in compliance with all applicable laws, regulations, permits and licenses on the dates listed above.

20. Facility Owner or Operator: Certificateion of receipt of non-hazardous materials covered by this manifest.

Printed/Typed Name | Signature | Month Day Year

NON-HAZARDOUS MANIFEST

WASTE MANAGEMENT

Please print or type. *(Form designed for use on elite (12-pitch) typewriter.)*

NON-HAZARDOUS MANIFEST

1. Generator's US EPA ID No. N/A
Manifest Document No. 00407

2. Page 1 of 1

3. Generator's Name and Mailing Address
ENVIRONMENTAL OFFICE
BUILDING 215 15TH STREET
FORT MCCLELLAN, AL 36205

4. Generator's Phone 256 848-3499

A. Manifest Number WMNA 141047

B. State Generator's ID

5. Transporter 1 Company Name Vicki Griffin Trucking

6. US EPA ID Number

C. State Transporter's ID

D. Transporter's Phone

7. Transporter 2 Company Name

8. US EPA ID Number

E. State Transporter's ID

F. Transporter's Phone

9. Designated Facility Name and Site Address
THREE CORNERS REGIONAL LANDFILL
2205 COUNTY ROAD 6
PIEDMONT, AL 36272

10. US EPA ID Number 100200000000

G. State Facility's ID

H. Facility's Phone 256/447-1881

GENERATOR

11. Description of Waste Materials	12. Containers No.	Type	13. Total Quantity	14. Unit Wt./Vol.	I. Misc. Comments
a. SOIL WM Profile # CR6218			EST. 42000	165	NH
b. WM Profile #					
c. WM Profile #					
d. WM Profile #					

J. Additional Descriptions for Materials Listed Above

Landfill_____ Solidification_____

Bio Remediation_____

K. Disposal Location

Cell Level

Grid

15. Special Handling Instructions and Additional Information

Purchase Order #

EMERGENCY CONTACT:

16. GENERATOR'S CERTIFICATION:

I hereby certify that the above-described materials are not hazardous wastes as defined by 40 CFR Part 261 or any applicable state law, have been fully and accurately described, classified and packaged, and are in proper condition for transportation according to applicable regulations.

Printed/Typed Name Luther Owen | Signature "On Behalf of" Luther Owen | Month Day Year 09/12/00

TRANSPORTER

17. Transporter 1 Acknowledgement of Receipt of Materials

Printed/Typed Name Chad Griffin | Signature Chad Griffin | Month Day Year 09/18/00

18. Transporter 2 Acknowledgement of Receipt of Materials

Printed/Typed Name | Signature | Month Day Year

FACILITY

19. Certificate of Final Treatment/Disposal

I certify, on behalf of the above listed treatment facility, that to the best of my knowledge, the above-described waste was managed in compliance with all applicable laws, regulations, permits and licenses on the dates listed above.

20. Facility Owner or Operator: Certificateion of receipt of non-hazardous materials covered by this manifest.

Printed/Typed Name | Signature | Month Day Year

NON-HAZARDOUS MANIFEST

WASTE MANAGEMENT

Please print or type. *(Form designed for use on elite (12-pitch) typewriter.)*

NON-HAZARDOUS MANIFEST

1. Generator's US EPA ID No. N/A
Manifest Document No. 00408

2. Page 1 of 1

3. Generator's Name and Mailing Address
ENVIRONMENTAL OFFICE
BUILDING 215 15TH STREET
FORT MCCLELLAN, AL 36205

4. Generator's Phone 256 848-3499

A. Manifest Number WMNA 141048

B. State Generator's ID

5. Transporter 1 Company Name Vicki Griffin Trucking

6. US EPA ID Number

C. State Transporter's ID

D. Transporter's Phone

7. Transporter 2 Company Name

8. US EPA ID Number

E. State Transporter's ID

F. Transporter's Phone

9. Designated Facility Name and Site Address
THREE CORNERS REGIONAL LANDFILL
2205 COUNTY ROAD 6
PIEDMONT, AL 36272

10. US EPA ID Number 1 0 0 2 0 0 0 0 0 0 0 0

G. State Facility's ID

H. Facility's Phone 256/447-1881

GENERATOR

11. Description of Waste Materials	12. Containers No.	Type	13. Total Quantity	14. Unit Wt./Vol.	I. Misc. Comments
a. SOIL WM Profile # U8821A			EST. 40000	LBS.	NH
b. WM Profile #					
c. WM Profile #					
d. WM Profile #					

J. Additional Descriptions for Materials Listed Above

Landfill_____ Solidification_____

Bio Remediation_____

K. Disposal Location

Cell Level

Grid

15. Special Handling Instructions and Additional Information

Purchase Order # EMERGENCY CONTACT:

16. GENERATOR'S CERTIFICATION:

I hereby certify that the above-described materials are not hazardous wastes as defined by 40 CFR Part 261 or any applicable state law, have been fully and accurately described, classified and packaged, and are in proper condition for transportation according to applicable regulations.

Printed/Typed Name Luther Dewes | Signature "On behalf of" Luther Dewes | Month Day Year 09/2000

TRANSPORTER

17. Transporter 1 Acknowledgement of Receipt of Materials

Printed/Typed Name Mike Peterson | Signature Mike Peterson | Month Day Year 09 18 00

18. Transporter 2 Acknowledgement of Receipt of Materials

Printed/Typed Name | Signature | Month Day Year

FACILITY

19. Certificate of Final Treatment/Disposal

I certify, on behalf of the above listed treatment facility, that to the best of my knowledge, the above-described waste was managed in compliance with all applicable laws, regulations, permits and licenses on the dates listed above.

20. Facility Owner or Operator: Certificateion of receipt of non-hazardous materials covered by this manifest.

Printed/Typed Name | Signature | Month Day Year

NON-HAZARDOUS MANIFEST

WASTE MANAGEMENT

Please print or type. *(Form designed for use on elite (12-pitch) typewriter.)*

NON-HAZARDOUS MANIFEST

1. Generator's US EPA ID No. N/A — Manifest Document No. 00409

2. Page 1 of 1

3. Generator's Name and Mailing Address
ENVIRONMENTAL OFFICE
BUILDING 215 15TH STREET
FORT MCCLELLAN, AL 36205

4. Generator's Phone 256 848-3499

A. Manifest Number WMNA 141049

B. State Generator's ID

5. Transporter 1 Company Name: Vick Coulson Trucking

6. US EPA ID Number

C. State Transporter's ID

D. Transporter's Phone

7. Transporter 2 Company Name

8. US EPA ID Number

E. State Transporter's ID

F. Transporter's Phone

9. Designated Facility Name and Site Address
THREE CORNERS REGIONAL LANDFILL
2205 COUNTY ROAD 6
PIEDMONT, AL 36272

10. US EPA ID Number 100200000000

G. State Facility's ID

H. Facility's Phone 256/447-1881

GENERATOR

11. Description of Waste Materials	12. Containers No.	Type	13. Total Quantity	14. Unit Wt./Vol.	I. Misc. Comments
a. SOIL — WM Profile # CR8218			Est. 40000	LS	NH
b. — WM Profile #					
c. — WM Profile #					
d. — WM Profile #					

J. Additional Descriptions for Materials Listed Above

Landfill_____ Solidification_____

Bio Remediation_____

K. Disposal Location

Cell Level

Grid

15. Special Handling Instructions and Additional Information

Purchase Order #

EMERGENCY CONTACT:

16. GENERATOR'S CERTIFICATION:

I hereby certify that the above-described materials are not hazardous wastes as defined by 40 CFR Part 261 or any applicable state law, have been fully and accurately described, classified and packaged, and are in proper condition for transportation according to applicable regulations.

Printed/Typed Name: Luther Owen — Signature: "On behalf of" — Month Day Year 09/20/00

TRANSPORTER

17. Transporter 1 Acknowledgement of Receipt of Materials

Printed/Typed Name: Chad Coulson — Signature — Month Day Year 09/18/00

18. Transporter 2 Acknowledgement of Receipt of Materials

Printed/Typed Name — Signature — Month Day Year

FACILITY

19. Certificate of Final Treatment/Disposal

I certify, on behalf of the above listed treatment facility, that to the best of my knowledge, the above-described waste was managed in compliance with all applicable laws, regulations, permits and licenses on the dates listed above.

20. Facility Owner or Operator: Certificateion of receipt of non-hazardous materials covered by this manifest.

Printed/Typed Name — Signature — Month Day Year

NON-HAZARDOUS MANIFEST

WASTE MANAGEMENT

Please print or type. *(Form designed for use on elite (12-pitch) typewriter.)*

NON-HAZARDOUS MANIFEST

1. Generator's US EPA ID No. N/A — Manifest Document No. 0041 0

2. Page 1 of 1

3. Generator's Name and Mailing Address
ENVIRONMENTAL OFFICE
BUILDING 215 15TH STREET
FORT MCCLELLAN, AL 36205

4. Generator's Phone 256 848-3499

A. Manifest Number WMNA 141050

B. State Generator's ID

5. Transporter 1 Company Name: Vicki Griffin Trucking

6. US EPA ID Number

C. State Transporter's ID

D. Transporter's Phone

7. Transporter 2 Company Name

8. US EPA ID Number

E. State Transporter's ID

F. Transporter's Phone

9. Designated Facility Name and Site Address
THREE CORNERS REGIONAL LANDFILL
2205 COUNTY ROAD 6
PIEDMONT, AL 36272

10. US EPA ID Number 1 0 0 2 0 0 0 0 0 0 0 0

G. State Facility's ID

H. Facility's Phone 256/447-1881

11. Description of Waste Materials	12. Containers No.	Type	13. Total Quantity	14. Unit Wt./Vol.	I. Misc. Comments
a. SOIL — WM Profile # C88218			Est. 3 4000	LS	NH
b. — WM Profile #					
c. — WM Profile #					
d. — WM Profile #					

J. Additional Descriptions for Materials Listed Above

Landfill_____ Solidification_____

Bio Remediation_____

K. Disposal Location

Cell Level

Grid

15. Special Handling Instructions and Additional Information

Purchase Order #

EMERGENCY CONTACT:

16. GENERATOR'S CERTIFICATION:

I hereby certify that the above-described materials are not hazardous wastes as defined by 40 CFR Part 261 or any applicable state law, have been fully and accurately described, classified and packaged, and are in proper condition for transportation according to applicable regulations.

Printed/Typed Name: Luther Owen — Signature "On behalf of" Luther Owen — Month Day Year 04/12/00

17. Transporter 1 Acknowledgement of Receipt of Materials

Printed/Typed Name: Jimmy Cronek — Signature — Month Day Year 04/18/00

18. Transporter 2 Acknowledgement of Receipt of Materials

Printed/Typed Name — Signature — Month Day Year

19. Certificate of Final Treatment/Disposal

I certify, on behalf of the above listed treatment facility, that to the best of my knowledge, the above-described waste was managed in compliance with all applicable laws, regulations, permits and licenses on the dates listed above.

20. Facility Owner or Operator: Certificateion of receipt of non-hazardous materials covered by this manifest.

Printed/Typed Name — Signature — Month Day Year

GENERATOR — TRANSPORTER — FACILITY

GENERATOR #1 COPY

RECEIPT FOR UST DISPOSAL

OXFORD SCRAP METAL CO., INC.

P.O. Box 3332 Phone 256-831-3850

OXFORD, ALABAMA 36203

DATE 8-23-00

M I T Group

1810	Steel @ 2.00	36	20
6940	Steel @ 1.50	104	10
		140	30

TANK CONTENT WASTE MANIFEST

M&M Chemical Co.
1229 Valley Drive
Attalla, AL 35954
256-538-3800

WASTE MATERIAL PROFILE FORM
PROFILE NO. _____

A. GENERAL INFORMATION

GENERATOR: Environmental Office
FACILITY ADDRESS: Bldg. 215, 15th Street, Fort McClellan, AL 36205
TECHNICAL CONTACT: Luther Owen
NAME OF WASTE: Water
PROCESS GENERATING WASTE: water from UST removal

TRANSPORTER: MEI
GENERATOR USEPA ID NO.: AL4210020562
GENERATOR STATE ID NO.: _____
PHONE NO.: 256-848-5649
TITLE: Natural Resource
SIC CODE: _____

B. PHYSICAL CHARACTERISTICS OF WASTE

PHYSICAL STATE @ 70°F: X Liquid __ Semi-Solid __ Solid
ODOR: X None __ Mild __ Strong Describe _____
FLASH POINT: __ <100°F __ 101°F-139°F __ 140°F-200°F __ >200°F X No Flash Value _____
BTU RANGE: Ø /gal.
SPECIFIC GRAVITY: __ <.8 X .8-1.0 __ >1.0 Exact _____
SOLIDS RANGE: Ø %

LAYERS: ✓ Single-Phased __ Bi-layered __ Multilayered
COLOR: grey-milky
pH RANGE: __ >2-5 X >5-9 __ >9<12.5
UNBURNABLE RESIDUE RANGE: _____ %
WATER CONTENT RANGE: 98-100 % Dissolved; 98-100 % Free Layer
Viscosity Range: LOW Centipoises

C. CHEMICAL COMPOSITION

	RANGE
Water	98-100 %
Dirt	0-2 %

D. METALS

		TOTAL (ppm)		TCLP (ppm)
ANTIMONY (Sb)	>	10.0	✓ No __ Yes	CONC. RANGE Ø
ARSENIC (As)	>	5.0	No __ Yes	CONC. RANGE
BARIUM (Ba)	>	100.0	No __ Yes	CONC. RANGE
BERYLLIUM (Be)	>	1.0	No __ Yes	CONC. RANGE
CADMIUM (Cd)	>	1.0	No __ Yes	CONC. RANGE
CHROMIUM (Cr)	>	5.0	No __ Yes	CONC. RANGE
LEAD (Pb)	>	5.0	No __ Yes	CONC. RANGE
MERCURY (Hg)	>	0.2	No __ Yes	CONC. RANGE
NICKEL (Ni)	>	5.0	No __ Yes	CONC. RANGE
SELENIUM (Se)	>	1.0	No __ Yes	CONC. RANGE
SILVER (Ag)	>	5.0	No __ Yes	CONC. RANGE
THALLIUM (Tl)	>	10.0	No __ Yes	CONC. RANGE

E. OTHER COMPONENTS - TOTAL (ppm)

SULFUR Ø PCB'S Ø HALOGENS Ø

F. HAZARDOUS CHARACTERISTICS

REACTIVITY: X None __ Water Reactive __ Shock Sensitive __ Pyrophoric __ Explosive __ Sulfides: _____ __ Cyanides: _____ Other: _____
OTHER HAZARDOUS CHARACTERISTICS: __ Ignitable __ Corrosive __ TCLP Waste __ Other: _____
USEPA HAZARDOUS WASTE? __ Yes X No
USEPA HAZARDOUS WASTE CODE(S): _____
STATE HAZARDOUS WASTE? __ Yes X No
STATE HAZARDOUS WASTE CODE(S): _____

G. SHIPPING INFORMATION

DOT HAZARDOUS MATERIAL? __ Yes X No
PROPER SHIPPING NAME: Non-hazardous, Non-Regulated Liquid
HAZARD CLASS _____ ID NO. _____
PACKAGING GROUP _____ EMERGENCY RESPONSE GUIDE NO. _____
PRIMARY CONSTITUENTS CONTRIBUTING TO HAZARD: _____
24 HR. EMERGENCY PHONE NO. _____
METHOD OF SHIPMENT: X Bulk __ Drums (Type/Size _____)
ESTIMATED VOLUME: 10,000 Gal/Drums/Tons per Gallons

H. SPECIAL HANDLING OR INCOMPATIBILITIES

IS THIS WASTE SUBJECT TO BENZENE WASTE NESHAP? __ Yes X No __ Additional Pages Attached

GENERATOR CERTIFICATION

I hereby certify that all information in this and all attached documents is true and accurate, and that all known or suspected hazards have been disclosed. I certify that there are no hazardous constituents or characteristics except as described above, and if the waste stream or process generating the waste changes, I will notify M&M prior to shipment of the waste.

Karen B. Pinson — Signature
Karen B. Pinson — Printed/Typed Name
Environmental Specialist — Title
17 August 2000 — Date

TC Rule Certification Form

Generator Name: Environmental Office EPA ID #: AL4210020562

Location: Bldg. 215, 15th Street, Fort McClellan, AL 36205

Waste Description: Water

CHARACTERISTICS OF HAZARDOUS WASTE: Indicate if this waste contains any of the following characteristics based on criteria mandated by 40 CFR 261.21, 261.22, 261.23 and 261.24.

		Regulatory Threshold Level	Check One Yes	Check One No	Check One Scientific Data	Generator's Knowledge	Actual Value
D001	Characteristic of Ignitability	< 140°F		✓	✓		°F
D002	Characteristic of Corrosivity	≤ 2 or ≥ 12.5		✓	✓		pH
D003	Characteristic of Reactivity			✓	✓		

	Constituent	*Regulatory Threshold Level, ppm	Check One Yes	Check One No	Check One Scientific Data	Generator's Knowledge	Actual Value ppm
D004	Arsenic	5.0		✓	✓		<Reg. Level
D005	Barium	100.0					
D006	Cadmium	1.0					
D007	Chromium	5.0					
D008	Lead	5.0					
D009	Mercury	0.2					
D010	Selenium	1.0					
D011	Silver	5.0					
D012	Endrin	0.02					
D013	Lindane	0.4					
D014	Methoxychlor	10.0					
D015	Toxaphene	0.5					
D016	2, 4-D (2,4-Dichloro-phenoxyacetic acid)	10.0					
D017	2,4, 5-TP (Silvex)	1.0					
D018	Benzene	0.5					
D019	Carbon Tetrachloride	0.5					
D020	Chlordane	0.03					
D021	Chlorobenzene	100.0					
D022	Chloroform	6.0					
D023	o-Cresol	200.0					
D024	m-Cresol	200.0					
D025	p-Cresol	200.0					

—Continued—

46745 #3301 04157-00

Emergency Contact Telephone Number
(800)851-8061

UNIFORM HAZARDOUS WASTE MANIFEST

1. Generator's US EPA ID No.: AL4210020562
Manifest Document No.: 0.0.4.0.1
2. Page 1 of
Information in the shaded areas is not required by Federal law.

3. Generator's Name and Mailing Address
ENVIRONMENTAL OFFICE
BLDG 215, 15TH ST
FT. MCCLELLAN AL 36205
4. Generator's Phone ((256)) 848-5649

A. State Manifest Document Number: MMI-0088234
B. State Generator's ID: AL4210020562

5. Transporter 1 Company Name: METROPOLITAN ENV. INC.
6. US EPA ID Number: INT190010397
C. State Transporter's ID
D. Transporter's Phone: (256)546-2002

7. Transporter 2 Company Name
8. US EPA ID Number
E. State Transporter's ID
F. Transporter's Phone ( ) -

9. Designated Facility Name and Site Address
M & M Chemical & Equipment Co.,Inc.
Hwy 11 North (Mailing:1229 Valley Drive)
Reece City,AL 35954(Attalla,AL 35954)
10. US EPA ID Number: ALD070513767
G. State Facility's ID
H. Facility's Phone: (256) 538-3800

11. US DOT Description (Including Proper Shipping Name, Hazard Class, and ID Number)

	HM	11. US DOT Description	12. Containers No.	12. Type	13. Total Quantity	14. Unit Wt/Vol	I. Waste No.
a.	X	~~HAZARDOUS WASTE, LIQUID, N.O.S. (XYLENE, NAPHTHALENE), 9,NA3082,PG III,F001,F002 F003,F005~~ NON-REGULATED WASTE LIQUID FROM UST	01	TT	5000	G	~~F001,F002 F003,F005~~
b.							
c.							
d.							

J. Additional Descriptions for Materials Listed Above: STATE OF ORIGIN ALABAMA
PROFILE# 11A-~~020865~~ 20877, 11B-_____, 11C-_____, 11D-_____

K. Handling Codes for Wastes Listed Above

15. Special Handling Instructions and Additional Information
2000 DOT EMERGENCY RESPONSE GUIDEBOOK
GUIDE NUMBER 171
EMERGENCY PHONE NO. (800)851-8061

16. **GENERATOR'S CERTIFICATION:** I hereby declare that the contents of this consignment are fully and accurately described above by proper shipping name and are classified, packed, marked, and labeled, and are in all respects in proper condition for transport by highway according to applicable international and national governmental regulations.

If I am a large quantity generator, I certify that I have a program in place to reduce the volume and toxicity of waste generated to the degree I have determined to be economically practicable and that I have selected the practicable method of treatment, storage, or disposal currently available to me which minimizes the present and future threat to human health and the environment; **OR,** if I am a small quantity generator, I have made a good faith effort to minimize my waste generation and select the best waste management method that is available to me and that I can afford.

GENERATOR — Printed/Typed Name: Karen B. Pinson — Signature: Karen B. Pinson — Month Day Year: 08 17 00

TRANSPORTER

17. Transporter 1 Acknowledgement of Receipt of Materials
Printed/Typed Name: LAWRENCE J. MARTIN — Signature: Lawrence J. Martin — Month Day Year: 08 17 00

18. Transporter 2 Acknowledgement of Receipt of Materials
Printed/Typed Name — Signature — Month Day Year

FACILITY

19. Discrepancy Indication Space

20. Facility Owner or Operator: Certification of receipt of hazardous materials covered by this manifest except as noted in Item 19.
Printed/Typed Name: Tina Maroney — Signature: Tina Maroney — Month Day Year: 08 17 00

ORIGINAL - RETURN TO GENERATOR

31331

800,551 8061

UNIFORM HAZARDOUS WASTE MANIFEST

1. Generator's US EPA ID No.: [illegible]

Manifest Document No.: 0-04-02

2. Page 1 of

Information in the shaded areas is not required by Federal law.

GENERATOR

3. Generator's Name and Mailing Address
ENVIRONMENTAL OFFICE
BLDG 215, 15TH ST
FT. MCCLELLAN AL 36205

4. Generator's Phone (256) 848-5610

A. State Manifest Document Number: MMT-0088235

B. State Generator's ID: AL4210020562

5. Transporter 1 Company Name: METROPOLITAN ENV. INC

6. US EPA ID Number: [illegible]

C. State Transporter's ID:

D. Transporter's Phone: (256)546-2002

7. Transporter 2 Company Name:

8. US EPA ID Number:

E. State Transporter's ID:

F. Transporter's Phone: ( )

9. Designated Facility Name and Site Address
M & H Chemical & Equipment Co., Inc.
Hwy 11 North (Mailing: 1229 Valley Drive)
Reece City, AL 35954 (Altalla, AL 35954)

10. US EPA ID Number: [illegible]

G. State Facility's ID:

H. Facility's Phone: (256) 538-3800

11. US DOT Description *(Including Proper Shipping Name, Hazard Class, and ID Number)*

	HM		12. Containers No.	Type	13. Total Quantity	14. Unit Wt/Vol	Waste No.
a.	X	~~HAZARDOUS WASTE, LIQUID, N.O.S. (XYLENE, NAPTHALENE), NA3082, PG III, ERG# [illegible], RQ, P046~~ Non-Regulated Waste GROUND FROM UST	01	TT	5000	G	~~F001, F002, F003, F005~~
b.							
c.							
d.							

J. Additional Descriptions for Materials Listed Above: STATE OF ORIGIN ALABAMA

PROFILE# 11A-020865, 11B-_____, 11C-_____, 11D-_____

K. Handling Codes for Wastes Listed Above

15. Special Handling Instructions and Additional Information
2000 DOT EMERGENCY RESPONSE GUIDEBOOK
GUIDE NUMBER 171
EMERGENCY PHONE NO 800 851 8061

16. **GENERATOR'S CERTIFICATION:** I hereby declare that the contents of this consignment are fully and accurately described above by proper shipping name and are classified, packed, marked, and labeled, and are in all respects in proper condition for transport by highway according to applicable international and national governmental regulations.

If I am a large quantity generator, I certify that I have a program in place to reduce the volume and toxicity of waste generated to the degree I have determined to be economically practicable and that I have selected the practicable method of treatment, storage, or disposal currently available to me which minimizes the present and future threat to human health and the environment; **OR,** if I am a small quantity generator, I have made a good faith effort to minimize my waste generation and select the best waste management method that is available to me and that I can afford.

Printed/Typed Name	Signature	Month	Day	Year
Karen B. Pinson	Karen B. Pinson	10	18	00

TRANSPORTER

17. Transporter 1 Acknowledgement of Receipt of Materials

Printed/Typed Name	Signature	Month	Day	Year
LAWRENCE J. MARTIN	[illegible]	10	18	00

18. Transporter 2 Acknowledgement of Receipt of Materials

Printed/Typed Name	Signature	Month	Day	Year

FACILITY

19. Discrepancy Indication Space

20. Facility Owner or Operator: Certification of receipt of hazardous materials covered by this manifest except as noted in Item 19.

Printed/Typed Name	Signature	Month	Day	Year

GENERATOR'S COPY

ANALYTICAL RESULTS

UST13701 Analytical Report 1
Sample Receipt Documentation 82
Invoice 89
Total # of Pages 89

SEVERN TRENT SERVICES

STL Knoxville
5815 Middlebrook Pike
Knoxville, TN 37921-5947

Tel: 865-291-3000
Fax: 865-584-4315
www.stl-inc.com

ANALYTICAL REPORT

PROJECT NO. 783149

FTMC
SDG #: UST13701

Duane Nielsen

IT Corp - Ft. McClellan
312 Directors Drive
Knoxville, TN 37923

SEVERN TRENT LABORATORIES, INC.

John Reynolds
Project Manager

August 31, 2000

SAMPLE SUMMARY

UST13701 : H0H190105

WO #	SAMPLE#	CLIENT SAMPLE ID	DATE	TIME
DJ4XF	001	LK0001	08/18/00	14:00
DJ4XG	002	LK0002	08/18/00	14:08
DJ4XH	003	LK0003	08/18/00	14:00
DJ4XJ	004	LK0004	08/18/00	14:15
DJ4XK	005	LK0005	08/18/00	13:30
DJ4XL	006	LK0010	08/18/00	09:30
DJ4XM	007	LK0011	08/18/00	09:30
DJ4XN	008	LK0012	08/18/00	09:30
DJ4XP	009	LK0013	08/18/00	09:30
DJ4XQ	010	LK0014	08/18/00	09:30
DJ4XR	011	LK8001	08/18/00	14:30
DJ4XV	012	LK8003	08/18/00	14:30
DJ4XW	013	LK8004	08/18/00	14:30

NOTE(S):

- The analytical results of the samples listed above are presented on the following pages.
- All calculations are performed before rounding to avoid round-off errors in calculated results.
- Results noted as "ND" were not detected at or above the stated limit.
- This report must not be reproduced, except in full, without the written approval of the laboratory.
- Results for the following parameters are never reported on a dry weight basis: color, corrosivity, density, flashpoint, ignitability, layers, odor, paint filter test, pH, porosity pressure, reactivity, redox potential, specific gravity, spot tests, solids, solubility, temperature, viscosity, and weight.

SDG SAMPLE SUMMARY REPORT

UST13701

IT CORP - FT. MCCLELLAN 00394097

LOT-SAMPLE #	QC	RECEIPT DATE	CLIENT SAMPLE ID
B0H210000-230	L	08/19/00	DUPLICATE CHECK
B0H210000-233	L	08/19/00	DUPLICATE CHECK
B0H220000-427	L	08/19/00	DUPLICATE CHECK
H0H190105-001		08/19/00	LK0001
H0H190105-001	D	08/19/00	LK0001
H0H190105-001	S	08/19/00	LK0001
H0H190105-002		08/19/00	LK0002
H0H190105-003		08/19/00	LK0003
H0H190105-004		08/19/00	LK0004
H0H190105-005		08/19/00	LK0005
H0H190105-006		08/19/00	LK0010
H0H190105-007		08/19/00	LK0011
H0H190105-008		08/19/00	LK0012
H0H190105-009		08/19/00	LK0013
H0H190105-010		08/19/00	LK0014
H0H190105-010	D	08/19/00	LK0014
H0H190105-010	S	08/19/00	LK0014
H0H190105-011		08/19/00	LK8001
H0H190105-011	D	08/19/00	LK8001
H0H190105-011	S	08/19/00	LK8001
H0H190105-012		08/19/00	LK8003
H0H190105-013		08/19/00	LK8004
H0H190105-013	X	08/19/00	LK8004 DUP
H0H200000-093	L	08/19/00	DUPLICATE CHECK

ANALYTICAL METHODS SUMMARY

UST13701

PARAMETER	ANALYTICAL METHOD
Extractable Petroleum Hydrocarbons	SW846 8015B
Paint Filter Test	SW846 9095
Percent Moisture	MCAWW 160.3 MOD
Polynuclear Aromatic Hydrocarbons by HPLC	SW846 8310
Trace Inductively Coupled Plasma (ICP) Metals	SW846 6010B
Volatile Petroleum Hydrocarbons	SW846 8015B
Volatiles by GC	SW846 8021B

References:

MCAWW "Methods for Chemical Analysis of Water and Wastes", EPA-600/4-79-020, March 1983 and subsequent revisions.

SW846 "Test Methods for Evaluating Solid Waste, Physical/Chemical Methods", Third Edition, November 1986 and its updates.

PROJECT NARRATIVE
UST13701/H0H190105

The results reported herein are applicable to the samples submitted for analysis only.

The original chain of custody documentation is included with this report.

Sample Receipt

There were no problems with the condition of the samples received.

Subcontract

The following analyses were performed by STL Tampa East, 5910 Breckenridge Parkway, Tampa, FL 33601: Percent Solids (MCAWW 160.3 MOD), Gasoline and Diesel Range Organics (SW846 8015B), Paint Filter Test (SW846 9095), Polynuclear Aromatic Hydrocarbons (SW846 8310) and BTEX (SW846 8021B).

Quality Control

All holding times and QC criteria were met with the following exception:

Polynuclear Aromatic Hydrocarbons

The batch matrix spike/matrix spike duplicate and surrogate recoveries were not calculated because the extract was diluted beyond the ability to quantitate a recovery. The associated laboratory control sample showed acceptable results indicating that the analysis was in control.

This report shall not be reproduced except in full, without the written approval of the laboratory.

STL Knoxville maintains the following certifications, approvals and accreditations: Arkansas DPCE, California ELAP Cert. #2100, Connecticut DPH Cert. #PH-0233, Florida Cert. #E87177, Florida DEP CompQAP #880566, Georgia DNR, Cert. #906, Hawaii DOH, Indiana DOH, Cert. #C-TN-02, Kentucky DEP Lab ID #90101, Maryland DHMH Cert. #277, Massachusetts Cert. #M-TN009, New Jersey DEP, Cert. #80001, New Mexico ED, New York DOH Lab #10781, North Carolina DEHNR Cert. #64, North Dakota DOHCL Cert. #R-134, Ohio EPA VAP #CL0059, Oklahoma DEQ ID #9415, South Carolina DHEC Lab ID #84001, Tennessee DOH Lab ID #02014, Utah DOH Cust. ID QUAN#, Virginia DGS Lab ID #00165, Washington DOE Lab #C120, Wisconsin DNR Lab ID #998044300, AALA Cert. #486.01, US Army Corps of Engineers, Naval Facilities Engineering Service Center, and USDA Soil Permit #S-3929. This list of approvals is subject to change and does not imply that laboratory certification is available for all parameters reported in this environmental sample data report.

IT CORP - FT. MCCLELLAN

Client Sample ID: LK8001

GC Semivolatiles

Lot-Sample #...:	H0H190105-011	**Work Order #...:**	DJ4XR104	**Matrix.....:**	SOLID
Date Sampled...:	08/18/00	**Date Received..:**	08/19/00		
Prep Date.....:	08/19/00	**Analysis Date..:**	08/23/00		
Prep Batch #...:	0232145				
Dilution Factor:	2				
% Moisture.....:	3.9	**Method.....:**	SW846 8015B		

PARAMETER	RESULT	REPORTING LIMIT	UNITS	MDL
Diesel Range Organics	**62**	**21**	**mg/kg**	**5.8**

SURROGATE	PERCENT RECOVERY	RECOVERY LIMITS
Tetratriacontane	65	(25 - 113)

NOTE(S):

Results and reporting limits have been adjusted for dry weight.

IT CORP - FT. MCCLELLAN

Client Sample ID: LK8003

GC Semivolatiles

Lot-Sample #...:	H0H190105-012	Work Order #...:	DJ4XV104	Matrix.....:	SOLID
Date Sampled...:	08/18/00	Date Received..:	08/19/00		
Prep Date.....:	08/19/00	Analysis Date..:	08/23/00		
Prep Batch #...:	0232145				
Dilution Factor:	2				
% Moisture.....:	5.2	Method.....:	SW846 8015B		

PARAMETER	RESULT	REPORTING LIMIT	UNITS	MDL
Diesel Range Organics	120	21	mg/kg	5.9

SURROGATE	PERCENT RECOVERY	RECOVERY LIMITS
Tetratriacontane	92	(25 - 113)

NOTE(S):

Results and reporting limits have been adjusted for dry weight.

IT CORP - FT. MCCLELLAN

Client Sample ID: LK8004

GC Semivolatiles

Lot-Sample #...:	H0H190105-013	**Work Order #...:**	DJ4XW104	**Matrix.....:**	SOLID
Date Sampled...:	08/18/00	**Date Received..:**	08/19/00		
Prep Date.....:	08/19/00	**Analysis Date..:**	08/23/00		
Prep Batch #...:	0232145				
Dilution Factor:	2				
% Moisture.....:	5.0	**Method.....:**	SW846 8015B		

PARAMETER	RESULT	REPORTING LIMIT	UNITS	MDL
Diesel Range Organics	**65**	**21**	**mg/kg**	**5.9**

SURROGATE	PERCENT RECOVERY	RECOVERY LIMITS
Tetratriacontane	67	(25 - 113)

NOTE(S):

Results and reporting limits have been adjusted for dry weight.

METHOD BLANK REPORT

GC Semivolatiles

Client Lot #...: UST13701 **Work Order #...:** DJ5AQ101 **Matrix.....:** SOLID
MB Lot-Sample #: B0H190000-145
Prep Date.....: 08/19/00
Analysis Date..: 08/23/00 **Prep Batch #...:** 0232145
Dilution Factor: 1

PARAMETER	RESULT	REPORTING LIMIT	UNITS	METHOD
Diesel Range Organics	ND	10	mg/kg	SW846 8015B

SURROGATE	PERCENT RECOVERY	RECOVERY LIMITS
Tetratriacontane	99	(25 - 113)

NOTE(S):

Calculations are performed before rounding to avoid round-off errors in calculated results.

MATRIX SPIKE SAMPLE DATA REPORT

GC Semivolatiles

Client Lot #...: UST13701 **Work Order #...:** DJ4XR106-MS **Matrix.....:** SOLID
MS Lot-Sample #: H0H190105-011 DJ4XR107-MSD
Date Sampled...: 08/18/00 **Date Received..:** 08/19/00
Prep Date.....: 08/19/00 **Analysis Date..:** 08/23/00
Prep Batch #...: 0232145
Dilution Factor: 2 **% Moisture.....:** 3.9

PARAMETER	SAMPLE AMOUNT	SPIKE AMT	MEASRD AMOUNT	UNITS	PERCENT RECOVERY	RPD	METHOD
Diesel Range Organics	**62**	**61.6**	**127**	**mg/kg**	**105**		**SW846 8015B**
	62	**61.6**	**120**	**mg/kg**	**94**	**5.9**	**SW846 8015B**

SURROGATE	PERCENT RECOVERY	RECOVERY LIMITS
Tetratriacontane	73	(25 - 113)
	76	(25 - 113)

NOTE(S):

Calculations are performed before rounding to avoid round-off errors in calculated results.

Bold print denotes control parameters

Results and reporting limits have been adjusted for dry weight.

MATRIX SPIKE SAMPLE EVALUATION REPORT

GC Semivolatiles

Client Lot #...: UST13701 **Work Order #...:** DJ4XR106-MS **Matrix.....:** SOLID
MS Lot-Sample #: H0H190105-011 DJ4XR107-MSD
Date Sampled...: 08/18/00 **Date Received..:** 08/19/00
Prep Date.....: 08/19/00 **Analysis Date..:** 08/23/00
Prep Batch #...: 0232145
Dilution Factor: 2 **% Moisture.....:** 3.9

PARAMETER	PERCENT RECOVERY	RECOVERY LIMITS	RPD	RPD LIMITS	METHOD
Diesel Range Organics	**105**	**(35 - 115)**			**SW846 8015B**
	94	**(35 - 115)**	**5.9**	**(0-34)**	**SW846 8015B**

SURROGATE	PERCENT RECOVERY	RECOVERY LIMITS
Tetratriacontane	73	(25 - 113)
	76	(25 - 113)

NOTE(S):

Calculations are performed before rounding to avoid round-off errors in calculated results.

Bold print denotes control parameters

Results and reporting limits have been adjusted for dry weight.

LABORATORY CONTROL SAMPLE DATA REPORT

GC Semivolatiles

Client Lot #...: UST13701 **Work Order #...:** DJ5AQ102 **Matrix.....:** SOLID
LCS Lot-Sample#: B0H190000-145
Prep Date.....: 08/19/00 **Analysis Date..:** 08/23/00
Prep Batch #...: 0232145
Dilution Factor: 1

PARAMETER	SPIKE AMOUNT	MEASURED AMOUNT	UNITS	PERCENT RECOVERY	METHOD
Diesel Range Organics	**59.2**	**54.5**	**mg/kg**	**92**	**SW846 8015B**

SURROGATE	PERCENT RECOVERY	RECOVERY LIMITS
Tetratriacontane	108	(25 - 113)

NOTE(S):

Calculations are performed before rounding to avoid round-off errors in calculated results.

Bold print denotes control parameters

LABORATORY CONTROL SAMPLE EVALUATION REPORT

GC Semivolatiles

Client Lot #...: UST13701 **Work Order #...:** DJ5AQ102 **Matrix.....:** SOLID
LCS Lot-Sample#: B0H190000-145
Prep Date.....: 08/19/00 **Analysis Date..:** 08/23/00
Prep Batch #...: 0232145
Dilution Factor: 1

PARAMETER	PERCENT RECOVERY	RECOVERY LIMITS	METHOD
Diesel Range Organics	**92**	**(35 - 115)**	**SW846 8015B**

SURROGATE	PERCENT RECOVERY	RECOVERY LIMITS
Tetratriacontane	108	(25 - 113)

NOTE(S):

Calculations are performed before rounding to avoid round-off errors in calculated results.

Bold print denotes control parameters

IT CORP - FT. MCCLELLAN

Client Sample ID: LK8001

GC Volatiles

Lot-Sample #...:	H0H190105-011	**Work Order #...:**	DJ4XR105	**Matrix.....:**	SOLID
Date Sampled...:	08/18/00	**Date Received..:**	08/19/00		
Prep Date.....:	08/20/00	**Analysis Date..:**	08/22/00		
Prep Batch #...:	0234233				
Dilution Factor:	1				
% Moisture.....:	3.9	**Method.....:**	SW846 8015B		

PARAMETER	RESULT	REPORTING LIMIT	UNITS	MDL
Gasoline Range Organics	**14**	**5.2**	**mg/kg**	**0.45**

SURROGATE	PERCENT RECOVERY	RECOVERY LIMITS
4-Bromofluorobenzene	154	(39 - 163)

NOTE(S):

Results and reporting limits have been adjusted for dry weight.

IT CORP - FT. MCCLELLAN

Client Sample ID: LK8003

GC Volatiles

Lot-Sample #...:	H0H190105-012	**Work Order #...:**	DJ4XV105	**Matrix.....:**	SOLID
Date Sampled...:	08/18/00	**Date Received..:**	08/19/00		
Prep Date.....:	08/20/00	**Analysis Date..:**	08/22/00		
Prep Batch #...:	0234233				
Dilution Factor:	1				
% Moisture.....:	5.2	**Method.....:**	SW846 8015B		

PARAMETER	RESULT	REPORTING LIMIT	UNITS	MDL
Gasoline Range Organics	**11**	**5.3**	**mg/kg**	**0.45**

SURROGATE	PERCENT RECOVERY	RECOVERY LIMITS
4-Bromofluorobenzene	128	(39 - 163)

NOTE(S):

Results and reporting limits have been adjusted for dry weight.

IT CORP - FT. MCCLELLAN

Client Sample ID: LK8004

GC Volatiles

Lot-Sample #...:	H0H190105-013	**Work Order #...:**	DJ4XW105	**Matrix.....:**	SOLID
Date Sampled...:	08/18/00	**Date Received..:**	08/19/00		
Prep Date.....:	08/20/00	**Analysis Date..:**	08/22/00		
Prep Batch #...:	0234233				
Dilution Factor:	1				
% Moisture.....:	5.0	**Method.....:**	SW846 8015B		

PARAMETER	RESULT	REPORTING LIMIT	UNITS	MDL
Gasoline Range Organics	ND	5.3	mg/kg	0.45

SURROGATE	PERCENT RECOVERY	RECOVERY LIMITS
4-Bromofluorobenzene	113	(39 - 163)

NOTE(S):

Results and reporting limits have been adjusted for dry weight.

METHOD BLANK REPORT

GC Volatiles

Client Lot #...: UST13701 **Work Order #...:** DJ5TN101 **Matrix.....:** SOLID
MB Lot-Sample #: B0H210000-233

Prep Date.....: 08/20/00
Analysis Date..: 08/22/00 **Prep Batch #...:** 0234233
Dilution Factor: 1

PARAMETER	RESULT	REPORTING LIMIT	UNITS	METHOD
Gasoline Range Organics	ND	5.0	mg/kg	SW846 8015B

SURROGATE	PERCENT RECOVERY	RECOVERY LIMITS
4-Bromofluorobenzene	80	(39 - 163)

NOTE(S):

Calculations are performed before rounding to avoid round-off errors in calculated results.

LABORATORY CONTROL SAMPLE DATA REPORT

GC Volatiles

Client Lot #...: UST13701 **Work Order #...:** DJ5TN102-LCS **Matrix.....:** SOLID
LCS Lot-Sample#: B0H210000-233 DJ5TN103-LCSD
Prep Date.....: 08/20/00 **Analysis Date..:** 08/22/00
Prep Batch #...: 0234233
Dilution Factor: 1

PARAMETER	SPIKE AMOUNT	MEASURED AMOUNT	UNITS	PERCENT RECOVERY	RPD	METHOD
Gasoline Range Organics	**20.0**	**22.0**	**mg/kg**	**110**		**SW846 8015B**
	20.0	**20.4**	**mg/kg**	**102**	**7.6**	**SW846 8015B**

SURROGATE	PERCENT RECOVERY	RECOVERY LIMITS
4-Bromofluorobenzene	112	(39 - 163)
	111	(39 - 163)

NOTE(S):

Calculations are performed before rounding to avoid round-off errors in calculated results.

Bold print denotes control parameters

LABORATORY CONTROL SAMPLE EVALUATION REPORT

GC Volatiles

Client Lot #...: UST13701 **Work Order #...:** DJ5TN102-LCS **Matrix.....:** SOLID
LCS Lot-Sample#: B0H210000-233 DJ5TN103-LCSD
Prep Date.....: 08/20/00 **Analysis Date..:** 08/22/00
Prep Batch #...: 0234233
Dilution Factor: 1

PARAMETER	PERCENT RECOVERY	RECOVERY LIMITS	RPD	RPD LIMITS	METHOD
Gasoline Range Organics	**110**	**(26 - 115)**			**SW846 8015B**
	102	**(26 - 115)**	**7.6**	**(0-25)**	**SW846 8015B**

SURROGATE	PERCENT RECOVERY	RECOVERY LIMITS
4-Bromofluorobenzene	112	(39 - 163)
	111	(39 - 163)

NOTE(S):

Calculations are performed before rounding to avoid round-off errors in calculated results.

Bold print denotes control parameters

IT CORP - FT. MCCLELLAN

Client Sample ID: LK0001

GC Volatiles

Lot-Sample #...: H0H190105-001 **Work Order #...:** DJ4XF104 **Matrix.....:** SOLID
Date Sampled...: 08/18/00 **Date Received..:** 08/19/00
Prep Date.....: 08/20/00 **Analysis Date..:** 08/21/00
Prep Batch #...: 0234230
Dilution Factor: 1
% Moisture.....: 15 **Method.....:** SW846 8021B

PARAMETER	RESULT	REPORTING LIMIT	UNITS	MDL
Benzene	ND	59	ug/kg	21
Ethylbenzene	ND	59	ug/kg	26
Xylenes (total)	**870**	**59**	**ug/kg**	**55**
Toluene	ND	59	ug/kg	16

SURROGATE	PERCENT RECOVERY	RECOVERY LIMITS
4-Bromofluorobenzene	99	(46 - 143)

NOTE(S):

Results and reporting limits have been adjusted for dry weight.

IT CORP - FT. MCCLELLAN

Client Sample ID: LK0002

GC Volatiles

Lot-Sample #...: H0H190105-002 **Work Order #...:** DJ4XG104 **Matrix.....:** SOLID
Date Sampled...: 08/18/00 **Date Received..:** 08/19/00
Prep Date.....: 08/20/00 **Analysis Date..:** 08/21/00
Prep Batch #...: 0234230
Dilution Factor: 1
% Moisture.....: 19 **Method.....:** SW846 8021B

PARAMETER	RESULT	REPORTING LIMIT	UNITS	MDL
Benzene	ND	62	ug/kg	22
Ethylbenzene	ND	62	ug/kg	27
Toluene	ND	62	ug/kg	17
Xylenes (total)	**800**	**62**	**ug/kg**	**58**

SURROGATE	PERCENT RECOVERY	RECOVERY LIMITS
4-Bromofluorobenzene	99	(46 - 143)

NOTE(S):

Results and reporting limits have been adjusted for dry weight.

IT CORP - FT. MCCLELLAN

Client Sample ID: LK0003

GC Volatiles

Lot-Sample #...: H0H190105-003 **Work Order #...:** DJ4XH104 **Matrix.....:** SOLID
Date Sampled...: 08/18/00 **Date Received..:** 08/19/00
Prep Date.....: 08/20/00 **Analysis Date..:** 08/21/00
Prep Batch #...: 0234230
Dilution Factor: 1
% Moisture.....: 21 **Method.....:** SW846 8021B

PARAMETER	RESULT	REPORTING LIMIT	UNITS	MDL
Benzene	ND	64	ug/kg	23
Ethylbenzene	ND	64	ug/kg	28
Toluene	ND	64	ug/kg	18
Xylenes (total)	ND	64	ug/kg	60

SURROGATE	PERCENT RECOVERY	RECOVERY LIMITS
4-Bromofluorobenzene	87	(46 - 143)

NOTE(S):

Results and reporting limits have been adjusted for dry weight.

IT CORP - FT. MCCLELLAN

Client Sample ID: LK0004

GC Volatiles

Lot-Sample #...: H0H190105-004 Work Order #...: DJ4XJ104 Matrix.....: SOLID
Date Sampled...: 08/18/00 Date Received..: 08/19/00
Prep Date.....: 08/20/00 Analysis Date..: 08/21/00
Prep Batch #...: 0234230
Dilution Factor: 1
% Moisture.....: 18 Method.....: SW846 8021B

PARAMETER	RESULT	REPORTING LIMIT	UNITS	MDL
Benzene	ND	61	ug/kg	22
Ethylbenzene	ND	61	ug/kg	27
Toluene	ND	61	ug/kg	17
Xylenes (total)	ND	61	ug/kg	57

SURROGATE	PERCENT RECOVERY	RECOVERY LIMITS
4-Bromofluorobenzene	85	(46 - 143)

NOTE(S):

Results and reporting limits have been adjusted for dry weight.

IT CORP - FT. MCCLELLAN

Client Sample ID: LK0005

GC Volatiles

Lot-Sample #...: H0H190105-005 **Work Order #...:** DJ4XK104 **Matrix.....:** SOLID
Date Sampled...: 08/18/00 **Date Received..:** 08/19/00
Prep Date.....: 08/20/00 **Analysis Date..:** 08/21/00
Prep Batch #...: 0234230
Dilution Factor: 1
% Moisture.....: 21 **Method.....:** SW846 8021B

PARAMETER	RESULT	REPORTING LIMIT	UNITS	MDL
Benzene	ND	64	ug/kg	23
Ethylbenzene	ND	64	ug/kg	28
Toluene	ND	64	ug/kg	18
Xylenes (total)	ND	64	ug/kg	60

SURROGATE	PERCENT RECOVERY	RECOVERY LIMITS
4-Bromofluorobenzene	87	(46 - 143)

NOTE(S):

Results and reporting limits have been adjusted for dry weight.

IT CORP - FT. MCCLELLAN

Client Sample ID: LK0010

GC Volatiles

Lot-Sample #...: H0H190105-006 **Work Order #...:** DJ4XL104 **Matrix.....:** SOLID
Date Sampled...: 08/18/00 **Date Received..:** 08/19/00
Prep Date.....: 08/20/00 **Analysis Date..:** 08/21/00
Prep Batch #...: 0234230
Dilution Factor: 1
% Moisture.....: 14 **Method.....:** SW846 8021B

PARAMETER	RESULT	REPORTING LIMIT	UNITS	MDL
Benzene	ND	58	ug/kg	21
Ethylbenzene	ND	58	ug/kg	26
Toluene	ND	58	ug/kg	16
Xylenes (total)	ND	58	ug/kg	55

SURROGATE	PERCENT RECOVERY	RECOVERY LIMITS
4-Bromofluorobenzene	91	(46 - 143)

NOTE(S):

Results and reporting limits have been adjusted for dry weight.

IT CORP - FT. MCCLELLAN

Client Sample ID: LK0011

GC Volatiles

Lot-Sample #...: H0H190105-007 **Work Order #...:** DJ4XM104 **Matrix.....:** SOLID
Date Sampled...: 08/18/00 **Date Received..:** 08/19/00
Prep Date.....: 08/20/00 **Analysis Date..:** 08/21/00
Prep Batch #...: 0234230
Dilution Factor: 1
% Moisture.....: 16 **Method.....:** SW846 8021B

PARAMETER	RESULT	REPORTING LIMIT	UNITS	MDL
Benzene	ND	59	ug/kg	21
Ethylbenzene	ND	59	ug/kg	26
Toluene	ND	59	ug/kg	17
Xylenes (total)	ND	59	ug/kg	56

SURROGATE	PERCENT RECOVERY	RECOVERY LIMITS
4-Bromofluorobenzene	90	(46 - 143)

NOTE(S):

Results and reporting limits have been adjusted for dry weight.

IT CORP - FT. MCCLELLAN

Client Sample ID: LK0012

GC Volatiles

Lot-Sample #...:	H0H190105-008	**Work Order #...:**	DJ4XN104	**Matrix.....:**	SOLID
Date Sampled...:	08/18/00	**Date Received..:**	08/19/00		
Prep Date.....:	08/20/00	**Analysis Date..:**	08/21/00		
Prep Batch #...:	0234230				
Dilution Factor:	1				
% Moisture.....:	18	**Method.....:**	SW846 8021B		

PARAMETER	RESULT	REPORTING LIMIT	UNITS	MDL
Benzene	ND	61	ug/kg	22
Ethylbenzene	**66**	**61**	**ug/kg**	**27**
Toluene	ND	61	ug/kg	17
Xylenes (total)	**470**	**61**	**ug/kg**	**58**

SURROGATE	PERCENT RECOVERY	RECOVERY LIMITS
4-Bromofluorobenzene	88	(46 - 143)

NOTE(S):

Results and reporting limits have been adjusted for dry weight.

IT CORP - FT. MCCLELLAN

Client Sample ID: LK0013

GC Volatiles

Lot-Sample #...: H0H190105-009 **Work Order #...:** DJ4XP104 **Matrix.....:** SOLID
Date Sampled...: 08/18/00 **Date Received..:** 08/19/00
Prep Date.....: 08/20/00 **Analysis Date..:** 08/21/00
Prep Batch #...: 0234230
Dilution Factor: 1
% Moisture.....: 15 **Method.....:** SW846 8021B

PARAMETER	RESULT	REPORTING LIMIT	UNITS	MDL
Benzene	ND	59	ug/kg	21
Ethylbenzene	ND	59	ug/kg	26
Toluene	ND	59	ug/kg	17
Xylenes (total)	ND	59	ug/kg	55

SURROGATE	PERCENT RECOVERY	RECOVERY LIMITS
4-Bromofluorobenzene	94	(46 - 143)

NOTE(S):

Results and reporting limits have been adjusted for dry weight.

IT CORP - FT. MCCLELLAN

Client Sample ID: LK0014

GC Volatiles

Lot-Sample #...: H0H190105-010 **Work Order #...:** DJ4XQ104 **Matrix.....:** SOLID
Date Sampled...: 08/18/00 **Date Received..:** 08/19/00
Prep Date.....: 08/20/00 **Analysis Date..:** 08/21/00
Prep Batch #...: 0234230
Dilution Factor: 1
% Moisture.....: 24 **Method.....:** SW846 8021B

PARAMETER	RESULT	REPORTING LIMIT	UNITS	MDL
Benzene	ND	66	ug/kg	24
Ethylbenzene	ND	66	ug/kg	29
Toluene	ND	66	ug/kg	18
Xylenes (total)	**190**	**66**	**ug/kg**	**62**

SURROGATE	PERCENT RECOVERY	RECOVERY LIMITS
4-Bromofluorobenzene	90	(46 - 143)

NOTE(S):

Results and reporting limits have been adjusted for dry weight.

METHOD BLANK REPORT

GC Volatiles

Client Lot #...: UST13701 **Work Order #...:** DJ5TA101 **Matrix.....:** SOLID
MB Lot-Sample #: B0H210000-230

Prep Date.....: 08/20/00
Analysis Date..: 08/21/00 **Prep Batch #...:** 0234230
Dilution Factor: 1

PARAMETER	RESULT	REPORTING LIMIT	UNITS	METHOD
Benzene	ND	50	ug/kg	SW846 8021B
Ethylbenzene	ND	50	ug/kg	SW846 8021B
Toluene	ND	50	ug/kg	SW846 8021B
Xylenes (total)	ND	50	ug/kg	SW846 8021B

SURROGATE	PERCENT RECOVERY	RECOVERY LIMITS
4-Bromofluorobenzene	99	(46 - 143)

NOTE(S):

Calculations are performed before rounding to avoid round-off errors in calculated results.

LABORATORY CONTROL SAMPLE DATA REPORT

GC Volatiles

Client Lot #...: UST13701 **Work Order #...:** DJ5TA102-LCS **Matrix.....:** SOLID
LCS Lot-Sample#: B0H210000-230 DJ5TA103-LCSD
Prep Date.....: 08/20/00 **Analysis Date..:** 08/21/00
Prep Batch #...: 0234230
Dilution Factor: 1

PARAMETER	SPIKE AMOUNT	MEASURED AMOUNT	UNITS	PERCENT RECOVERY	RPD	METHOD
Benzene	**1000**	**1000**	**ug/kg**	**100**		**SW846 8021B**
	1000	**987**	**ug/kg**	**99**	**1.5**	**SW846 8021B**
Ethylbenzene	**1000**	**1020**	**ug/kg**	**102**		**SW846 8021B**
	1000	**1020**	**ug/kg**	**102**	**0.37**	**SW846 8021B**
Toluene	**1000**	**1030**	**ug/kg**	**102**		**SW846 8021B**
	1000	**1010**	**ug/kg**	**101**	**1.2**	**SW846 8021B**
m-Xylene & p-Xylene	**2000**	**2060**	**ug/kg**	**103**		**SW846 8021B**
	2000	**2050**	**ug/kg**	**103**	**0.41**	**SW846 8021B**
o-Xylene	**1000**	**1010**	**ug/kg**	**101**		**SW846 8021B**
	1000	**1000**	**ug/kg**	**100**	**0.34**	**SW846 8021B**

SURROGATE	PERCENT RECOVERY	RECOVERY LIMITS
4-Bromofluorobenzene	100	(46 - 143)
	101	(46 - 143)

NOTE(S):

Calculations are performed before rounding to avoid round-off errors in calculated results.

Bold print denotes control parameters

LABORATORY CONTROL SAMPLE EVALUATION REPORT

GC Volatiles

Client Lot #...: UST13701 **Work Order #...:** DJ5TA102-LCS **Matrix.....:** SOLID
LCS Lot-Sample#: B0H210000-230 DJ5TA103-LCSD
Prep Date.....: 08/20/00 **Analysis Date..:** 08/21/00
Prep Batch #...: 0234230
Dilution Factor: 1

PARAMETER	PERCENT RECOVERY	RECOVERY LIMITS	RPD	RPD LIMITS	METHOD
Benzene	**100**	**(62 - 128)**			**SW846 8021B**
	99	**(62 - 128)**	**1.5**	**(0-30)**	**SW846 8021B**
Ethylbenzene	**102**	**(66 - 119)**			**SW846 8021B**
	102	**(66 - 119)**	**0.37**	**(0-20)**	**SW846 8021B**
Toluene	**102**	**(73 - 123)**			**SW846 8021B**
	101	**(73 - 123)**	**1.2**	**(0-20)**	**SW846 8021B**
m-Xylene & p-Xylene	**103**	**(70 - 130)**			**SW846 8021B**
	103	**(70 - 130)**	**0.41**	**(0-20)**	**SW846 8021B**
o-Xylene	**101**	**(70 - 130)**			**SW846 8021B**
	100	**(70 - 130)**	**0.34**	**(0-20)**	**SW846 8021B**

SURROGATE	PERCENT RECOVERY	RECOVERY LIMITS
4-Bromofluorobenzene	100	(46 - 143)
	101	(46 - 143)

NOTE(S):

Calculations are performed before rounding to avoid round-off errors in calculated results.

Bold print denotes control parameters

IT CORP - FT. MCCLELLAN

Client Sample ID: LK0001

HPLC

Lot-Sample #...: H0H190105-001 Work Order #...: DJ4XF102 Matrix.....: SOLID
Date Sampled...: 08/18/00 Date Received..: 08/19/00
Prep Date.....: 08/19/00 Analysis Date..: 08/22/00
Prep Batch #...: 0232144
Dilution Factor: 10
% Moisture.....: 15 Method.....: SW846 8310

PARAMETER	RESULT	REPORTING LIMIT	UNITS	MDL
Acenaphthene	77 J	590	ug/kg	59
Acenaphthylene	ND	590	ug/kg	75
Anthracene	ND	590	ug/kg	39
Benzo(a)anthracene	250	59	ug/kg	12
Benzo(a)pyrene	250	59	ug/kg	9.9
Benzo(b)fluoranthene	280	59	ug/kg	9.2
Benzo(ghi)perylene	150	59	ug/kg	13
Benzo(k)fluoranthene	220	59	ug/kg	5.9
Chrysene	370	59	ug/kg	10
Dibenz(a,h)anthracene	16 J	59	ug/kg	9.8
Fluoranthene	1100	59	ug/kg	10
Fluorene	510 J	590	ug/kg	110
Indeno(1,2,3-cd)pyrene	210	59	ug/kg	8.2
Naphthalene	910	590	ug/kg	200
Phenanthrene	1300	590	ug/kg	110
Pyrene	660	59	ug/kg	10

SURROGATE	PERCENT RECOVERY	RECOVERY LIMITS
Carbazole	NC,SRD	(17 - 115)

NOTE(S):

NC The recovery and/or RPD were not calculated.

SRD The surrogate recovery was not calculated because the extract was diluted beyond the ability to quantitate a recovery.

J Estimated result. Result is less than RL.

Results and reporting limits have been adjusted for dry weight.

IT CORP - FT. MCCLELLAN

Client Sample ID: LK0002

HPLC

Lot-Sample #...: H0H190105-002 Work Order #...: DJ4XG202 Matrix.....: SOLID
Date Sampled...: 08/18/00 Date Received..: 08/19/00
Prep Date.....: 08/22/00 Analysis Date..: 08/23/00
Prep Batch #...: 0235427
Dilution Factor: 2
% Moisture.....: 19 Method.....: SW846 8310

PARAMETER	RESULT	REPORTING LIMIT	UNITS	MDL
Acenaphthene	ND	120	ug/kg	12
Acenaphthylene	ND	120	ug/kg	16
Anthracene	51 J	120	ug/kg	8.1
Benzo(a)anthracene	54	12	ug/kg	2.5
Benzo(a)pyrene	67	12	ug/kg	2.1
Benzo(b)fluoranthene	73	12	ug/kg	1.9
Benzo(ghi)perylene	54	12	ug/kg	2.7
Benzo(k)fluoranthene	55	12	ug/kg	1.2
Chrysene	70	12	ug/kg	2.2
Dibenz(a,h)anthracene	6.3 J	12	ug/kg	2.0
Fluoranthene	350	12	ug/kg	2.2
Fluorene	110 J	120	ug/kg	22
Indeno(1,2,3-cd)pyrene	68	12	ug/kg	1.7
Naphthalene	89 J	120	ug/kg	42
Phenanthrene	550	120	ug/kg	24
Pyrene	140	12	ug/kg	2.2

SURROGATE	PERCENT RECOVERY	RECOVERY LIMITS
Carbazole	74	(17 - 115)

NOTE(S):

Results and reporting limits have been adjusted for dry weight.

J Estimated result. Result is less than RL.

IT CORP - FT. MCCLELLAN

Client Sample ID: LK0003

HPLC

Lot-Sample #...: H0H190105-003 **Work Order #...:** DJ4XH102 **Matrix.....:** SOLID
Date Sampled...: 08/18/00 **Date Received..:** 08/19/00
Prep Date.....: 08/19/00 **Analysis Date..:** 08/21/00
Prep Batch #...: 0232144
Dilution Factor: 1
% Moisture.....: 21 **Method.....:** SW846 8310

PARAMETER	RESULT	REPORTING LIMIT	UNITS	MDL
Acenaphthene	ND	64	ug/kg	6.4
Acenaphthylene	ND	64	ug/kg	8.1
Anthracene	ND	64	ug/kg	4.2
Benzo(a)anthracene	ND	6.4	ug/kg	1.3
Benzo(a)pyrene	ND	6.4	ug/kg	1.1
Benzo(b)fluoranthene	ND	6.4	ug/kg	0.99
Benzo(ghi)perylene	ND	6.4	ug/kg	1.4
Benzo(k)fluoranthene	ND	6.4	ug/kg	0.64
Chrysene	ND	6.4	ug/kg	1.1
Dibenz(a,h)anthracene	ND	6.4	ug/kg	1.1
Fluoranthene	ND	6.4	ug/kg	1.1
Fluorene	ND	64	ug/kg	12
Indeno(1,2,3-cd)pyrene	ND	6.4	ug/kg	0.89
Naphthalene	ND	64	ug/kg	22
Phenanthrene	ND	64	ug/kg	12
Pyrene	ND	6.4	ug/kg	1.1

SURROGATE	PERCENT RECOVERY	RECOVERY LIMITS
Carbazole	57	(17 - 115)

NOTE(S):

Results and reporting limits have been adjusted for dry weight.

IT CORP - FT. MCCLELLAN

Client Sample ID: LK0004

HPLC

Lot-Sample #...:	H0H190105-004	**Work Order #...:**	DJ4XJ102	**Matrix.....:**	SOLID
Date Sampled...:	08/18/00	**Date Received..:**	08/19/00		
Prep Date.....:	08/19/00	**Analysis Date..:**	08/21/00		
Prep Batch #...:	0232144				
Dilution Factor:	1				
% Moisture.....:	18	**Method.....:**	SW846 8310		

PARAMETER	RESULT	REPORTING LIMIT	UNITS	MDL
Acenaphthene	ND	61	ug/kg	6.1
Acenaphthylene	ND	61	ug/kg	7.8
Anthracene	ND	61	ug/kg	4.0
Benzo(a)anthracene	**22**	**6.1**	**ug/kg**	**1.2**
Benzo(a)pyrene	**61**	**6.1**	**ug/kg**	**1.0**
Benzo(b)fluoranthene	**38**	**6.1**	**ug/kg**	**0.95**
Benzo(ghi)perylene	**58**	**6.1**	**ug/kg**	**1.3**
Benzo(k)fluoranthene	**34**	**6.1**	**ug/kg**	**0.61**
Chrysene	**37**	**6.1**	**ug/kg**	**1.1**
Dibenz(a,h)anthracene	**4.1 J**	**6.1**	**ug/kg**	**1.0**
Fluoranthene	**60**	**6.1**	**ug/kg**	**1.1**
Fluorene	ND	61	ug/kg	11
Indeno(1,2,3-cd)pyrene	**33**	**6.1**	**ug/kg**	**0.86**
Naphthalene	ND	61	ug/kg	21
Phenanthrene	**23 J**	**61**	**ug/kg**	**12**
Pyrene	**49**	**6.1**	**ug/kg**	**1.1**

SURROGATE	PERCENT RECOVERY	RECOVERY LIMITS
Carbazole	64	(17 - 115)

NOTE(S):

Results and reporting limits have been adjusted for dry weight.

J Estimated result. Result is less than RL.

IT CORP - FT. MCCLELLAN

Client Sample ID: LK0005

HPLC

Lot-Sample #...: H0H190105-005 **Work Order #...:** DJ4XK102 **Matrix.....:** SOLID
Date Sampled...: 08/18/00 **Date Received..:** 08/19/00
Prep Date.....: 08/19/00 **Analysis Date..:** 08/21/00
Prep Batch #...: 0232144
Dilution Factor: 1
% Moisture.....: 21 **Method.....:** SW846 8310

PARAMETER	RESULT	REPORTING LIMIT	UNITS	MDL
Acenaphthene	ND	64	ug/kg	6.4
Acenaphthylene	ND	64	ug/kg	8.1
Anthracene	ND	64	ug/kg	4.2
Benzo(a)anthracene	ND	6.4	ug/kg	1.3
Benzo(a)pyrene	ND	6.4	ug/kg	1.1
Benzo(b)fluoranthene	ND	6.4	ug/kg	0.99
Benzo(ghi)perylene	ND	6.4	ug/kg	1.4
Benzo(k)fluoranthene	ND	6.4	ug/kg	0.64
Chrysene	ND	6.4	ug/kg	1.1
Dibenz(a,h)anthracene	ND	6.4	ug/kg	1.1
Fluoranthene	ND	6.4	ug/kg	1.1
Fluorene	ND	64	ug/kg	12
Indeno(1,2,3-cd)pyrene	ND	6.4	ug/kg	0.89
Naphthalene	ND	64	ug/kg	22
Phenanthrene	ND	64	ug/kg	12
Pyrene	ND	6.4	ug/kg	1.1

SURROGATE	PERCENT RECOVERY	RECOVERY LIMITS
Carbazole	75	(17 - 115)

NOTE(S):

Results and reporting limits have been adjusted for dry weight.

IT CORP - FT. MCCLELLAN

Client Sample ID: LK0010

HPLC

Lot-Sample #...: H0H190105-006 **Work Order #...:** DJ4XL102 **Matrix.....:** SOLID
Date Sampled...: 08/18/00 **Date Received..:** 08/19/00
Prep Date.....: 08/19/00 **Analysis Date..:** 08/21/00
Prep Batch #...: 0232144
Dilution Factor: 1
% Moisture.....: 14 **Method.....:** SW846 8310

PARAMETER	RESULT	REPORTING LIMIT	UNITS	MDL
Acenaphthene	ND	58	ug/kg	5.8
Acenaphthylene	ND	58	ug/kg	7.4
Anthracene	ND	58	ug/kg	3.8
Benzo(a)anthracene	ND	5.8	ug/kg	1.2
Benzo(a)pyrene	ND	5.8	ug/kg	0.97
Benzo(b)fluoranthene	ND	5.8	ug/kg	0.90
Benzo(ghi)perylene	ND	5.8	ug/kg	1.3
Benzo(k)fluoranthene	ND	5.8	ug/kg	0.58
Chrysene	ND	5.8	ug/kg	1.0
Dibenz(a,h)anthracene	ND	5.8	ug/kg	0.96
Fluoranthene	ND	5.8	ug/kg	1.0
Fluorene	ND	58	ug/kg	11
Indeno(1,2,3-cd)pyrene	ND	5.8	ug/kg	0.81
Naphthalene	ND	58	ug/kg	20
Phenanthrene	ND	58	ug/kg	11
Pyrene	ND	5.8	ug/kg	1.0

SURROGATE	PERCENT RECOVERY	RECOVERY LIMITS
Carbazole	79	(17 - 115)

NOTE(S):

Results and reporting limits have been adjusted for dry weight.

IT CORP - FT. MCCLELLAN

Client Sample ID: LK0011

HPLC

Lot-Sample #...: H0H190105-007 **Work Order #...:** DJ4XM102 **Matrix.....:** SOLID
Date Sampled...: 08/18/00 **Date Received..:** 08/19/00
Prep Date.....: 08/19/00 **Analysis Date..:** 08/21/00
Prep Batch #...: 0232144
Dilution Factor: 1
% Moisture.....: 16 **Method.....:** SW846 8310

PARAMETER	RESULT	REPORTING LIMIT	UNITS	MDL
Acenaphthene	ND	59	ug/kg	5.9
Acenaphthylene	ND	59	ug/kg	7.6
Anthracene	ND	59	ug/kg	3.9
Benzo(a)anthracene	ND	5.9	ug/kg	1.2
Benzo(a)pyrene	ND	5.9	ug/kg	1.0
Benzo(b)fluoranthene	ND	5.9	ug/kg	0.93
Benzo(ghi)perylene	ND	5.9	ug/kg	1.3
Benzo(k)fluoranthene	ND	5.9	ug/kg	0.59
Chrysene	ND	5.9	ug/kg	1.0
Dibenz(a,h)anthracene	ND	5.9	ug/kg	0.99
Fluoranthene	ND	5.9	ug/kg	1.0
Fluorene	ND	59	ug/kg	11
Indeno(1,2,3-cd)pyrene	ND	5.9	ug/kg	0.83
Naphthalene	ND	59	ug/kg	20
Phenanthrene	ND	59	ug/kg	11
Pyrene	ND	5.9	ug/kg	1.1

SURROGATE	PERCENT RECOVERY	RECOVERY LIMITS
Carbazole	70	(17 - 115)

NOTE(S):

Results and reporting limits have been adjusted for dry weight.

IT CORP - FT. MCCLELLAN

Client Sample ID: LK0012

HPLC

Lot-Sample #...: H0H190105-008 **Work Order #...:** DJ4XN102 **Matrix.....:** SOLID
Date Sampled...: 08/18/00 **Date Received..:** 08/19/00
Prep Date.....: 08/19/00 **Analysis Date..:** 08/21/00
Prep Batch #...: 0232144
Dilution Factor: 1
% Moisture.....: 18 **Method.....:** SW846 8310

PARAMETER	RESULT	REPORTING LIMIT	UNITS	MDL
Acenaphthene	ND	61	ug/kg	6.1
Acenaphthylene	ND	61	ug/kg	7.8
Anthracene	ND	61	ug/kg	4.0
Benzo(a)anthracene	**22**	**6.1**	**ug/kg**	**1.2**
Benzo(a)pyrene	ND	6.1	ug/kg	1.0
Benzo(b)fluoranthene	ND	6.1	ug/kg	0.95
Benzo(ghi)perylene	ND	6.1	ug/kg	1.3
Benzo(k)fluoranthene	ND	6.1	ug/kg	0.61
Chrysene	**31**	**6.1**	**ug/kg**	**1.1**
Dibenz(a,h)anthracene	ND	6.1	ug/kg	1.0
Fluoranthene	**110**	**6.1**	**ug/kg**	**1.1**
Fluorene	**38 J**	**61**	**ug/kg**	**11**
Indeno(1,2,3-cd)pyrene	ND	6.1	ug/kg	0.86
Naphthalene	**85**	**61**	**ug/kg**	**21**
Phenanthrene	**110**	**61**	**ug/kg**	**12**
Pyrene	**55**	**6.1**	**ug/kg**	**1.1**

SURROGATE	PERCENT RECOVERY	RECOVERY LIMITS
Carbazole	55	(17 - 115)

NOTE(S):

Results and reporting limits have been adjusted for dry weight.

J Estimated result. Result is less than RL.

IT CORP - FT. MCCLELLAN

Client Sample ID: LK0013

HPLC

Lot-Sample #...: H0H190105-009 **Work Order #...:** DJ4XP102 **Matrix.....:** SOLID
Date Sampled...: 08/18/00 **Date Received..:** 08/19/00
Prep Date.....: 08/19/00 **Analysis Date..:** 08/21/00
Prep Batch #...: 0232144
Dilution Factor: 1
% Moisture.....: 15 **Method.....:** SW846 8310

PARAMETER	RESULT	REPORTING LIMIT	UNITS	MDL
Acenaphthene	ND	59	ug/kg	5.9
Acenaphthylene	ND	59	ug/kg	7.6
Anthracene	ND	59	ug/kg	3.9
Benzo(a)anthracene	**16**	**5.9**	**ug/kg**	**1.2**
Benzo(a)pyrene	**36**	**5.9**	**ug/kg**	**0.99**
Benzo(b)fluoranthene	**28**	**5.9**	**ug/kg**	**0.92**
Benzo(ghi)perylene	**18**	**5.9**	**ug/kg**	**1.3**
Benzo(k)fluoranthene	**24**	**5.9**	**ug/kg**	**0.59**
Chrysene	**21**	**5.9**	**ug/kg**	**1.0**
Dibenz(a,h)anthracene	**4.7 J**	**5.9**	**ug/kg**	**0.98**
Fluoranthene	**57**	**5.9**	**ug/kg**	**1.0**
Fluorene	ND	59	ug/kg	11
Indeno(1,2,3-cd)pyrene	**27**	**5.9**	**ug/kg**	**0.83**
Naphthalene	ND	59	ug/kg	20
Phenanthrene	**120**	**59**	**ug/kg**	**11**
Pyrene	**36**	**5.9**	**ug/kg**	**1.1**

SURROGATE	PERCENT RECOVERY	RECOVERY LIMITS
Carbazole	80	(17 - 115)

NOTE(S):

Results and reporting limits have been adjusted for dry weight.

J Estimated result. Result is less than RL.

IT CORP - FT. MCCLELLAN

Client Sample ID: LK0014

HPLC

Lot-Sample #...: H0H190105-010 **Work Order #...:** DJ4XQ102 **Matrix.....:** SOLID
Date Sampled...: 08/18/00 **Date Received..:** 08/19/00
Prep Date.....: 08/19/00 **Analysis Date..:** 08/21/00
Prep Batch #...: 0232144
Dilution Factor: 1
% Moisture.....: 24 **Method.....:** SW846 8310

PARAMETER	RESULT	REPORTING LIMIT	UNITS	MDL
Acenaphthene	ND	66	ug/kg	6.6
Acenaphthylene	ND	66	ug/kg	8.4
Anthracene	ND	66	ug/kg	4.3
Benzo(a)anthracene	**5.7 J**	**6.6**	**ug/kg**	**1.3**
Benzo(a)pyrene	**3.4 J**	**6.6**	**ug/kg**	**1.1**
Benzo(b)fluoranthene	**8.9**	**6.6**	**ug/kg**	**1.0**
Benzo(ghi)perylene	ND	6.6	ug/kg	1.4
Benzo(k)fluoranthene	ND	6.6	ug/kg	0.66
Chrysene	**8.9**	**6.6**	**ug/kg**	**1.2**
Dibenz(a,h)anthracene	ND	6.6	ug/kg	1.1
Fluoranthene	**18**	**6.6**	**ug/kg**	**1.2**
Fluorene	ND	66	ug/kg	12
Indeno(1,2,3-cd)pyrene	ND	6.6	ug/kg	0.92
Naphthalene	ND	66	ug/kg	22
Phenanthrene	**45 J**	**66**	**ug/kg**	**13**
Pyrene	**8.4**	**6.6**	**ug/kg**	**1.2**

SURROGATE	PERCENT RECOVERY	RECOVERY LIMITS
Carbazole	74	(17 - 115)

NOTE(S):

Results and reporting limits have been adjusted for dry weight.

J Estimated result. Result is less than RL.

METHOD BLANK REPORT

HPLC

Client Lot #...: UST13701 **Work Order #...:** DJ5AE101 **Matrix.....:** SOLID
MB Lot-Sample #: B0H190000-144

Prep Date.....: 08/19/00
Analysis Date..: 08/22/00 **Prep Batch #...:** 0232144
Dilution Factor: 1

PARAMETER	RESULT	REPORTING LIMIT	UNITS	METHOD
Acenaphthene	ND	50	ug/kg	SW846 8310
Acenaphthylene	ND	50	ug/kg	SW846 8310
Anthracene	ND	50	ug/kg	SW846 8310
Benzo(a)anthracene	ND	5.0	ug/kg	SW846 8310
Benzo(a)pyrene	ND	5.0	ug/kg	SW846 8310
Benzo(b)fluoranthene	ND	5.0	ug/kg	SW846 8310
Benzo(ghi)perylene	ND	5.0	ug/kg	SW846 8310
Benzo(k)fluoranthene	ND	5.0	ug/kg	SW846 8310
Chrysene	ND	5.0	ug/kg	SW846 8310
Dibenz(a,h)anthracene	ND	5.0	ug/kg	SW846 8310
Fluoranthene	ND	5.0	ug/kg	SW846 8310
Fluorene	ND	50	ug/kg	SW846 8310
Indeno(1,2,3-cd)pyrene	ND	5.0	ug/kg	SW846 8310
Naphthalene	ND	50	ug/kg	SW846 8310
Phenanthrene	ND	50	ug/kg	SW846 8310
Pyrene	ND	5.0	ug/kg	SW846 8310

SURROGATE	PERCENT RECOVERY	RECOVERY LIMITS
Carbazole	75	(17 - 115)

NOTE(S):

Calculations are performed before rounding to avoid round-off errors in calculated results.

METHOD BLANK REPORT

HPLC

Client Lot #...: UST13701 **Work Order #...:** DJ8V0101 **Matrix.....:** SOLID
MB Lot-Sample #: B0H220000-427

Prep Date.....: 08/22/00
Analysis Date..: 08/23/00 **Prep Batch #...:** 0235427
Dilution Factor: 1

PARAMETER	RESULT	REPORTING LIMIT	UNITS	METHOD
Acenaphthene	ND	50	ug/kg	SW846 8310
Acenaphthylene	ND	50	ug/kg	SW846 8310
Anthracene	ND	50	ug/kg	SW846 8310
Benzo(a)anthracene	ND	5.0	ug/kg	SW846 8310
Benzo(a)pyrene	ND	5.0	ug/kg	SW846 8310
Benzo(b)fluoranthene	ND	5.0	ug/kg	SW846 8310
Benzo(ghi)perylene	ND	5.0	ug/kg	SW846 8310
Benzo(k)fluoranthene	ND	5.0	ug/kg	SW846 8310
Chrysene	ND	5.0	ug/kg	SW846 8310
Dibenz(a,h)anthracene	ND	5.0	ug/kg	SW846 8310
Fluoranthene	ND	5.0	ug/kg	SW846 8310
Fluorene	ND	50	ug/kg	SW846 8310
Indeno(1,2,3-cd)pyrene	ND	5.0	ug/kg	SW846 8310
Naphthalene	ND	50	ug/kg	SW846 8310
Phenanthrene	ND	50	ug/kg	SW846 8310
Pyrene	ND	5.0	ug/kg	SW846 8310

SURROGATE	PERCENT RECOVERY	RECOVERY LIMITS
Carbazole	80	(17 - 115)

NOTE(S):

Calculations are performed before rounding to avoid round-off errors in calculated results.

LABORATORY CONTROL SAMPLE DATA REPORT

HPLC

Client Lot #...: UST13701 **Work Order #...:** DJ8V0102-LCS **Matrix.....:** SOLID
LCS Lot-Sample#: B0H220000-427 DJ8V0103-LCSD
Prep Date.....: 08/22/00 **Analysis Date..:** 08/23/00
Prep Batch #...: 0235427
Dilution Factor: 1

PARAMETER	SPIKE AMOUNT	MEASURED AMOUNT	UNITS	PERCENT RECOVERY	RPD	METHOD
Acenaphthene	**333**	**238**	**ug/kg**	**72**		**SW846 8310**
	333	**239**	**ug/kg**	**72**	**0.45**	**SW846 8310**
1-Methylnaphthalene	**333**	**237**	**ug/kg**	**71**		**SW846 8310**
	333	**234**	**ug/kg**	**70**	**1.3**	**SW846 8310**
Chrysene	**33.3**	**24.3**	**ug/kg**	**73**		**SW846 8310**
	33.3	**23.4**	**ug/kg**	**70**	**3.9**	**SW846 8310**
Fluorene	**333**	**237**	**ug/kg**	**71**		**SW846 8310**
	333	**229**	**ug/kg**	**69**	**3.4**	**SW846 8310**
Naphthalene	**333**	**219**	**ug/kg**	**66**		**SW846 8310**
	333	**213**	**ug/kg**	**64**	**2.6**	**SW846 8310**
Pyrene	**33.3**	**26.5**	**ug/kg**	**80**		**SW846 8310**
	33.3	**23.9**	**ug/kg**	**72**	**10**	**SW846 8310**

SURROGATE	PERCENT RECOVERY	RECOVERY LIMITS
Carbazole	76	(17 - 115)
	72	(17 - 115)

NOTE(S):

Calculations are performed before rounding to avoid round-off errors in calculated results.

Bold print denotes control parameters

LABORATORY CONTROL SAMPLE EVALUATION REPORT

HPLC

Client Lot #...: UST13701 **Work Order #...:** DJ8V0102-LCS **Matrix.....:** SOLID
LCS Lot-Sample#: B0H220000-427 DJ8V0103-LCSD
Prep Date.....: 08/22/00 **Analysis Date..:** 08/23/00
Prep Batch #...: 0235427
Dilution Factor: 1

PARAMETER	PERCENT RECOVERY	RECOVERY LIMITS	RPD	RPD LIMITS	METHOD
Acenaphthene	**72**	**(41 - 115)**			**SW846 8310**
	72	**(41 - 115)**	**0.45**	**(0-30)**	**SW846 8310**
1-Methylnaphthalene	**71**	**(45 - 115)**			**SW846 8310**
	70	**(45 - 115)**	**1.3**	**(0-27)**	**SW846 8310**
Chrysene	**73**	**(45 - 115)**			**SW846 8310**
	70	**(45 - 115)**	**3.9**	**(0-27)**	**SW846 8310**
Fluorene	**71**	**(42 - 115)**			**SW846 8310**
	69	**(42 - 115)**	**3.4**	**(0-28)**	**SW846 8310**
Naphthalene	**66**	**(28 - 116)**			**SW846 8310**
	64	**(28 - 116)**	**2.6**	**(0-26)**	**SW846 8310**
Pyrene	**80**	**(46 - 115)**			**SW846 8310**
	72	**(46 - 115)**	**10**	**(0-50)**	**SW846 8310**

SURROGATE	PERCENT RECOVERY	RECOVERY LIMITS
Carbazole	76	(17 - 115)
	72	(17 - 115)

NOTE(S):

Calculations are performed before rounding to avoid round-off errors in calculated results.

Bold print denotes control parameters

MATRIX SPIKE SAMPLE DATA REPORT

HPLC

Client Lot #...: UST13701 **Work Order #...:** DJ4XF105-MS **Matrix.....:** SOLID
MS Lot-Sample #: H0H190105-001 DJ4XF106-MSD
Date Sampled...: 08/18/00 **Date Received..:** 08/19/00
Prep Date.....: 08/19/00 **Analysis Date..:** 08/21/00
Prep Batch #...: 0232144
Dilution Factor: 10 **% Moisture.....:** 15

PARAMETER	SAMPLE AMOUNT	SPIKE AMT	MEASRD AMOUNT	UNITS	PERCENT RECOVERY	RPD	METHOD
Acenaphthene	**77**	**393**		**ug/kg**	**NC,MSA**		**SW846 8310**
	77	**393**		**ug/kg**	**NC,MSA**		**SW846 8310**
1-Methylnaphthalene	**860**	**393**		**ug/kg**	**NC,MSA**		**SW846 8310**
	860	**393**		**ug/kg**	**NC,MSA**		**SW846 8310**
Chrysene	**370**	**39.3**		**ug/kg**	**NC,MSB**		**SW846 8310**
	370	**39.3**		**ug/kg**	**NC,MSB**		**SW846 8310**
Fluorene	**510**	**393**		**ug/kg**	**NC,MSA**		**SW846 8310**
	510	**393**		**ug/kg**	**NC,MSA**		**SW846 8310**
Naphthalene	**910**	**393**		**ug/kg**	**NC,MSA**		**SW846 8310**
	910	**393**		**ug/kg**	**NC,MSA**		**SW846 8310**
Pyrene	**660**	**39.3**		**ug/kg**	**NC,MSB**		**SW846 8310**
	660	**39.3**		**ug/kg**	**NC,MSB**		**SW846 8310**

SURROGATE	PERCENT RECOVERY	RECOVERY LIMITS
Carbazole	NC,SRD	(17 - 115)
	NC,SRD	(17 - 115)

NOTE(S):

Calculations are performed before rounding to avoid round-off errors in calculated results.

Bold print denotes control parameters

NC The recovery and/or RPD were not calculated.

MSA The recovery and RPD were not calculated because the sample was diluted beyond the ability to quantitate a recovery.

SRD The surrogate recovery was not calculated because the extract was diluted beyond the ability to quantitate a recovery.

MSB The recovery and RPD were not calculated because the sample amount was greater than four times the spike amount.

MATRIX SPIKE SAMPLE EVALUATION REPORT

HPLC

Client Lot #...: UST13701 **Work Order #...:** DJ4XF105-MS **Matrix.....:** SOLID
MS Lot-Sample #: H0H190105-001 DJ4XF106-MSD
Date Sampled...: 08/18/00 **Date Received..:** 08/19/00
Prep Date.....: 08/19/00 **Analysis Date..:** 08/21/00
Prep Batch #...: 0232144
Dilution Factor: 10 **% Moisture.....:** 15

PARAMETER	PERCENT RECOVERY	RECOVERY LIMITS	RPD	RPD LIMITS	METHOD
Acenaphthene	**NC,MSA**	**(41 - 115)**			**SW846 8310**
	NC,MSA	**(41 - 115)**		**(0-30)**	**SW846 8310**
1-Methylnaphthalene	**NC,MSA**	**(45 - 115)**			**SW846 8310**
	NC,MSA	**(45 - 115)**		**(0-27)**	**SW846 8310**
Chrysene	**NC,MSB**	**(45 - 115)**			**SW846 8310**
	NC,MSB	**(45 - 115)**		**(0-27)**	**SW846 8310**
Fluorene	**NC,MSA**	**(42 - 115)**			**SW846 8310**
	NC,MSA	**(42 - 115)**		**(0-28)**	**SW846 8310**
Naphthalene	**NC,MSA**	**(28 - 116)**			**SW846 8310**
	NC,MSA	**(28 - 116)**		**(0-26)**	**SW846 8310**
Pyrene	**NC,MSB**	**(46 - 115)**			**SW846 8310**
	NC,MSB	**(46 - 115)**		**(0-50)**	**SW846 8310**

SURROGATE	PERCENT RECOVERY	RECOVERY LIMITS
Carbazole	NC,SRD	(17 - 115)
	NC,SRD	(17 - 115)

NOTE(S):

Calculations are performed before rounding to avoid round-off errors in calculated results.

Bold print denotes control parameters

NC The recovery and/or RPD were not calculated.

MSA The recovery and RPD were not calculated because the sample was diluted beyond the ability to quantitate a recovery.

SRD The surrogate recovery was not calculated because the extract was diluted beyond the ability to quantitate a recovery.

MSB The recovery and RPD were not calculated because the sample amount was greater than four times the spike amount.

LABORATORY CONTROL SAMPLE DATA REPORT

HPLC

Client Lot #...: UST13701 **Work Order #...:** DJ5AE102 **Matrix.....:** SOLID
LCS Lot-Sample#: B0H190000-144
Prep Date.....: 08/19/00 **Analysis Date..:** 08/21/00
Prep Batch #...: 0232144
Dilution Factor: 1

PARAMETER	SPIKE AMOUNT	MEASURED AMOUNT	UNITS	PERCENT RECOVERY	METHOD
Acenaphthene	333	229	ug/kg	69	SW846 8310
1-Methylnaphthalene	333	231	ug/kg	69	SW846 8310
Chrysene	33.3	22.7	ug/kg	68	SW846 8310
Fluorene	333	225	ug/kg	68	SW846 8310
Naphthalene	333	201	ug/kg	60	SW846 8310
Pyrene	33.3	24.0	ug/kg	72	SW846 8310

SURROGATE	PERCENT RECOVERY	RECOVERY LIMITS
Carbazole	73	(17 - 115)

NOTE(S):

Calculations are performed before rounding to avoid round-off errors in calculated results.

Bold print denotes control parameters

LABORATORY CONTROL SAMPLE EVALUATION REPORT

HPLC

Client Lot #...: UST13701 **Work Order #...:** DJ5AE102 **Matrix.....:** SOLID
LCS Lot-Sample#: B0H190000-144
Prep Date.....: 08/19/00 **Analysis Date..:** 08/21/00
Prep Batch #...: 0232144
Dilution Factor: 1

PARAMETER	PERCENT RECOVERY	RECOVERY LIMITS	METHOD
Acenaphthene	**69**	**(41 - 115)**	**SW846 8310**
1-Methylnaphthalene	**69**	**(45 - 115)**	**SW846 8310**
Chrysene	**68**	**(45 - 115)**	**SW846 8310**
Fluorene	**68**	**(42 - 115)**	**SW846 8310**
Naphthalene	**60**	**(28 - 116)**	**SW846 8310**
Pyrene	**72**	**(46 - 115)**	**SW846 8310**

SURROGATE	PERCENT RECOVERY	RECOVERY LIMITS
Carbazole	73	(17 - 115)

NOTE(S):

Calculations are performed before rounding to avoid round-off errors in calculated results.

Bold print denotes control parameters

IT CORP - FT. MCCLELLAN

Client Sample ID: LK0001

TOTAL Metals

Lot-Sample #...: H0H190105-001 Matrix.....: SOLID
Date Sampled...: 08/18/00 Date Received..: 08/19/00
% Moisture.....: 15

PARAMETER	RESULT	REPORTING LIMIT	UNITS	METHOD	PREPARATION-ANALYSIS DATE	WORK ORDER #
Prep Batch #...: 0233093						
Lead	70.2	3.5	mg/kg	SW846 6010B	08/20-08/22/00	DJ4XF103
		Dilution Factor: 10		Analysis Time..: 12:22	MDL.....: 1.4	

NOTE(S):

Results and reporting limits have been adjusted for dry weight.

IT CORP - FT. MCCLELLAN

Client Sample ID: LK0002

TOTAL Metals

Lot-Sample #...: H0H190105-002 Matrix.....: SOLID
Date Sampled...: 08/18/00 Date Received..: 08/19/00
% Moisture.....: 19

PARAMETER	RESULT	REPORTING LIMIT	UNITS	METHOD	PREPARATION-ANALYSIS DATE	WORK ORDER #
Prep Batch #...: 0233093						
Lead	46.5	3.7	mg/kg	SW846 6010B	08/20-08/22/00	DJ4XG103
		Dilution Factor: 10		Analysis Time..: 12:26	MDL.....: 1.5	

NOTE(S):

Results and reporting limits have been adjusted for dry weight.

IT CORP - FT. MCCLELLAN

Client Sample ID: LK0003

TOTAL Metals

Lot-Sample #...: H0H190105-003 Matrix.....: SOLID
Date Sampled...: 08/18/00 Date Received..: 08/19/00
% Moisture.....: 21

PARAMETER	RESULT	REPORTING LIMIT	UNITS	METHOD	PREPARATION-ANALYSIS DATE	WORK ORDER #
Prep Batch #...: 0233093						
Lead	39.7	3.8	mg/kg	SW846 6010B	08/20-08/22/00	DJ4XH103
		Dilution Factor: 10		Analysis Time..: 12:30	MDL.....: 1.5	

NOTE(S):

Results and reporting limits have been adjusted for dry weight.

IT CORP - FT. MCCLELLAN

Client Sample ID: LK0004

TOTAL Metals

Lot-Sample #...: H0H190105-004 **Matrix.....:** SOLID
Date Sampled...: 08/18/00 **Date Received..:** 08/19/00
% Moisture.....: 18

PARAMETER	RESULT	REPORTING LIMIT	UNITS	METHOD	PREPARATION-ANALYSIS DATE	WORK ORDER #
Prep Batch #...: 0233093						
Lead	**27.7**	**3.7**	**mg/kg**	**SW846 6010B**	**08/20-08/22/00**	**DJ4XJ103**
		Dilution Factor: 10		Analysis Time..: 12:35	MDL.....: 1.5	

NOTE(S):

Results and reporting limits have been adjusted for dry weight.

IT CORP - FT. MCCLELLAN

Client Sample ID: LK0005

TOTAL Metals

Lot-Sample #...: H0H190105-005 **Matrix.....:** SOLID
Date Sampled...: 08/18/00 **Date Received..:** 08/19/00
% Moisture.....: 21

PARAMETER	RESULT	REPORTING LIMIT	UNITS	METHOD	PREPARATION-ANALYSIS DATE	WORK ORDER #
Prep Batch #...: 0233093						
Lead	**25.3**	**3.8**	**mg/kg**	**SW846 6010B**	**08/20-08/22/00**	**DJ4XK103**
		Dilution Factor: 10		Analysis Time..: 12:50	MDL.....: 1.5	

NOTE(S):

Results and reporting limits have been adjusted for dry weight.

IT CORP - FT. MCCLELLAN

Client Sample ID: LK0010

TOTAL Metals

Lot-Sample #...: H0H190105-006 Matrix.....: SOLID
Date Sampled...: 08/18/00 Date Received..: 08/19/00
% Moisture.....: 14

PARAMETER	RESULT	REPORTING LIMIT	UNITS	METHOD	PREPARATION-ANALYSIS DATE	WORK ORDER #
Prep Batch #...: 0233093						
Lead	30.5	3.5	mg/kg	SW846 6010B	08/20-08/22/00	DJ4XL103
		Dilution Factor: 10		Analysis Time..: 12:55	MDL.....: 1.4	

NOTE(S):

Results and reporting limits have been adjusted for dry weight.

IT CORP - FT. MCCLELLAN

Client Sample ID: LK0011

TOTAL Metals

Lot-Sample #...: H0H190105-007 **Matrix.....:** SOLID
Date Sampled...: 08/18/00 **Date Received..:** 08/19/00
% Moisture.....: 16

PARAMETER	RESULT	REPORTING LIMIT	UNITS	METHOD	PREPARATION-ANALYSIS DATE	WORK ORDER #
Prep Batch #...: 0233093						
Lead	**22.3**	**3.6**	**mg/kg**	**SW846 6010B**	**08/20-08/22/00**	**DJ4XM103**
		Dilution Factor: 10		Analysis Time..: 12:59	MDL.....: 1.4	

NOTE(S):

Results and reporting limits have been adjusted for dry weight.

IT CORP - FT. MCCLELLAN

Client Sample ID: LK0012

TOTAL Metals

Lot-Sample #...: H0H190105-008 Matrix.....: SOLID
Date Sampled...: 08/18/00 Date Received..: 08/19/00
% Moisture.....: 18

PARAMETER	RESULT	REPORTING LIMIT	UNITS	METHOD	PREPARATION-ANALYSIS DATE	WORK ORDER #
Prep Batch #...: 0233093						
Lead	31.4	3.7	mg/kg	SW846 6010B	08/20-08/22/00	DJ4XN103
		Dilution Factor: 10		Analysis Time..: 13:03	MDL.....: 1.5	

NOTE(S):

Results and reporting limits have been adjusted for dry weight.

IT CORP - FT. MCCLELLAN

Client Sample ID: LK0013

TOTAL Metals

Lot-Sample #...: H0H190105-009 Matrix.....: SOLID
Date Sampled...: 08/18/00 Date Received..: 08/19/00
% Moisture.....: 15

PARAMETER	RESULT	REPORTING LIMIT	UNITS	METHOD	PREPARATION-ANALYSIS DATE	WORK ORDER #
Prep Batch #...: 0233093						
Lead	17.9	3.5	mg/kg	SW846 6010B	08/20-08/22/00	DJ4XP103
		Dilution Factor: 10		Analysis Time..: 13:08	MDL.....: 1.4	

NOTE(S):

Results and reporting limits have been adjusted for dry weight.

IT CORP - FT. MCCLELLAN

Client Sample ID: LK0014

TOTAL Metals

Lot-Sample #...: H0H190105-010 Matrix.....: SOLID
Date Sampled...: 08/18/00 Date Received..: 08/19/00
% Moisture.....: 24

PARAMETER	RESULT	REPORTING LIMIT	UNITS	METHOD	PREPARATION-ANALYSIS DATE	WORK ORDER #
Prep Batch #...: 0233093						
Lead	44.9	4.0	mg/kg	SW846 6010B	08/20-08/22/00	DJ4XQ103
		Dilution Factor: 10		Analysis Time..: 13:12	MDL.....: 1.6	

NOTE(S):

Results and reporting limits have been adjusted for dry weight.

IT CORP - FT. MCCLELLAN

Client Sample ID: LK8001

TOTAL Metals

Lot-Sample #...: H0H190105-011 Matrix.....: SOLID
Date Sampled...: 08/18/00 Date Received..: 08/19/00
% Moisture.....: 3.9

PARAMETER	RESULT	REPORTING LIMIT	UNITS	METHOD	PREPARATION-ANALYSIS DATE	WORK ORDER #
Prep Batch #...: 0233093						
Lead	10.8	3.1	mg/kg	SW846 6010B	08/20-08/22/00	DJ4XR102
		Dilution Factor: 10		Analysis Time..: 13:30	MDL.....: 1.2	

NOTE(S):

Results and reporting limits have been adjusted for dry weight.

IT CORP - FT. MCCLELLAN

Client Sample ID: LK8003

TOTAL Metals

Lot-Sample #...: H0H190105-012 **Matrix.....:** SOLID
Date Sampled...: 08/18/00 **Date Received..:** 08/19/00
% Moisture.....: 5.2

PARAMETER	RESULT	REPORTING LIMIT	UNITS	METHOD	PREPARATION-ANALYSIS DATE	WORK ORDER #
Prep Batch #...: 0233093						
Lead	**48.8**	**3.2**	**mg/kg**	**SW846 6010B**	**08/20-08/22/00**	**DJ4XV102**
		Dilution Factor: 10		Analysis Time..: 13:43	MDL.....: 1.3	

NOTE(S):

Results and reporting limits have been adjusted for dry weight.

IT CORP - FT. MCCLELLAN

Client Sample ID: LK8004

TOTAL Metals

Lot-Sample #...: H0H190105-013 **Matrix.....:** SOLID
Date Sampled...: 08/18/00 **Date Received..:** 08/19/00
% Moisture.....: 5.0

PARAMETER	RESULT	REPORTING LIMIT	UNITS	METHOD	PREPARATION-ANALYSIS DATE	WORK ORDER #
Prep Batch #...: 0233093						
Lead	**13.0**	**3.2**	**mg/kg**	**SW846 6010B**	**08/20-08/22/00**	**DJ4XW102**
		Dilution Factor: 10		Analysis Time..: 13:48	MDL.....: 1.3	

NOTE(S):

Results and reporting limits have been adjusted for dry weight.

METHOD BLANK REPORT

TOTAL Metals

Client Lot #...: H0H190105 **Matrix.....:** SOLID

PARAMETER	RESULT	REPORTING LIMIT	UNITS	METHOD	PREPARATION-ANALYSIS DATE	WORK ORDER #
MB Lot-Sample #: H0H200000-093 **Prep Batch #...:** 0233093						
Lead	ND	0.30	mg/kg	SW846 6010B	08/20-08/22/00	DJ5EA101
		Dilution Factor: 1				
		Analysis Time..: 11:02				

NOTE(S):

Calculations are performed before rounding to avoid round-off errors in calculated results.

MATRIX SPIKE SAMPLE DATA REPORT

TOTAL Metals

Client Lot #...: H0H190105 **Matrix.....:** SOLID
Date Sampled...: 08/18/00 **Date Received..:** 08/19/00

PARAMETER	SAMPLE AMOUNT	SPIKE AMT	MEASURED AMOUNT	UNITS	PERCNT RECVRY	RPD	METHOD	PREPARATION-ANALYSIS DATE	WORK ORDER #
MS Lot-Sample #: H0H190105-010 **Prep Batch #...:** 0233093									
Lead									
	44.9	65.9	126	mg/kg	123		SW846 6010B	08/20-08/22/00	DJ4XQ105
	44.9	65.9	104	mg/kg	89	20	SW846 6010B	08/20-08/22/00	DJ4XQ106

Dilution Factor: 10
Analysis Time..: 13:17

NOTE(S):

Calculations are performed before rounding to avoid round-off errors in calculated results.

Results and reporting limits have been adjusted for dry weight.

LABORATORY CONTROL SAMPLE DATA REPORT

TOTAL Metals

Lot-Sample #...: H0H190105 **Matrix.....:** SOLID

PARAMETER	SPIKE AMOUNT	MEASURED AMOUNT	UNITS	PERCNT RECVRY	RPD	METHOD	PREPARATION-ANALYSIS DATE	PREP BATCH #
Lead	50.0	50.0	mg/kg	100		SW846 6010B	08/20-08/22/00	0233093
	50.0	50.4	mg/kg	101	0.68	SW846 6010B	08/20-08/22/00	0233093

Dilution Factor: 1

NOTE(S):

Calculations are performed before rounding to avoid round-off errors in calculated results.

LABORATORY CONTROL SAMPLE EVALUATION REPORT

TOTAL Metals

Lot-Sample #...: H0H190105 **Matrix.....:** SOLID

PARAMETER	PERCENT RECOVERY	RECOVERY LIMITS	RPD	RPD LIMITS	METHOD	PREPARATION-ANALYSIS DATE	PREP-BATCH #
Lead	100	(80 - 120)			SW846 6010B	08/20-08/22/00	0233093
	101	(80 - 120)	0.68	(0-20)	SW846 6010B	08/20-08/22/00	0233093

Dilution Factor: 1

NOTE(S):

Calculations are performed before rounding to avoid round-off errors in calculated results.

IT CORP - FT. MCCLELLAN

Client Sample ID: LK0001

General Chemistry

Lot-Sample #...: H0H190105-001 **Work Order #...:** DJ4XF **Matrix.....:** SOLID
Date Sampled...: 08/18/00 **Date Received..:** 08/19/00
% Moisture.....: 15

PARAMETER	RESULT	RL	UNITS	METHOD	PREPARATION-ANALYSIS DATE	PREP BATCH #
Percent Moisture	15.1	0.10	%	MCAWW 160.3 MOD	08/21-08/22/00	0235153

Dilution Factor: 1 MDL.....:

IT CORP - FT. MCCLELLAN

Client Sample ID: LK0002

General Chemistry

Lot-Sample #...: H0H190105-002 **Work Order #...:** DJ4XG **Matrix.....:** SOLID
Date Sampled...: 08/18/00 **Date Received..:** 08/19/00
% Moisture.....: 19

PARAMETER	RESULT	RL	UNITS	METHOD	PREPARATION-ANALYSIS DATE	PREP BATCH #
Percent Moisture	19.0	0.10	%	MCAWW 160.3 MOD	08/21-08/22/00	0235153

Dilution Factor: 1 MDL.....:

IT CORP - FT. MCCLELLAN

Client Sample ID: LK0003

General Chemistry

Lot-Sample #...: H0H190105-003 **Work Order #...:** DJ4XH **Matrix.....:** SOLID
Date Sampled...: 08/18/00 **Date Received..:** 08/19/00
% Moisture.....: 21

PARAMETER	RESULT	RL	UNITS	METHOD	PREPARATION-ANALYSIS DATE	PREP BATCH #
Percent Moisture	**21.4**	**0.10**	**%**	**MCAWW 160.3 MOD**	**08/21-08/22/00**	**0235153**

Dilution Factor: 1 MDL.....:

IT CORP - FT. MCCLELLAN

Client Sample ID: LK0004

General Chemistry

Lot-Sample #...: H0H190105-004 **Work Order #...:** DJ4XJ **Matrix.....:** SOLID
Date Sampled...: 08/18/00 **Date Received..:** 08/19/00
% Moisture.....: 18

PARAMETER	RESULT	RL	UNITS	METHOD	PREPARATION-ANALYSIS DATE	PREP BATCH #
Percent Moisture	**18.2**	**0.10**	**%**	**MCAWW 160.3 MOD**	**08/21-08/22/00**	**0235153**

Dilution Factor: 1 MDL.....:

IT CORP - FT. MCCLELLAN

Client Sample ID: LK0005

General Chemistry

Lot-Sample #...: H0H190105-005 **Work Order #...:** DJ4XK **Matrix.....:** SOLID
Date Sampled...: 08/18/00 **Date Received..:** 08/19/00
% Moisture.....: 21

PARAMETER	RESULT	RL	UNITS	METHOD	PREPARATION-ANALYSIS DATE	PREP BATCH #
Percent Moisture	21.3	0.10	%	MCAWW 160.3 MOD	08/21-08/22/00	0235153

Dilution Factor: 1 MDL.....:

IT CORP - FT. MCCLELLAN

Client Sample ID: LK0010

General Chemistry

Lot-Sample #...: H0H190105-006 **Work Order #...:** DJ4XL **Matrix.....:** SOLID
Date Sampled...: 08/18/00 **Date Received..:** 08/19/00
% Moisture.....: 14

PARAMETER	RESULT	RL	UNITS	METHOD	PREPARATION-ANALYSIS DATE	PREP BATCH #
Percent Moisture	**13.8**	**0.10**	**%**	**MCAWW 160.3 MOD**	**08/21-08/22/00**	**0235153**

Dilution Factor: 1 MDL.....:

IT CORP - FT. MCCLELLAN

Client Sample ID: LK0011

General Chemistry

Lot-Sample #...: H0H190105-007 **Work Order #...:** DJ4XM **Matrix.....:** SOLID
Date Sampled...: 08/18/00 **Date Received..:** 08/19/00
% Moisture.....: 16

PARAMETER	RESULT	RL	UNITS	METHOD	PREPARATION-ANALYSIS DATE	PREP BATCH #
Percent Moisture	**15.8**	**0.10**	**%**	**MCAWW 160.3 MOD**	**08/21-08/22/00**	**0235153**

Dilution Factor: 1 MDL.....:

IT CORP - FT. MCCLELLAN

Client Sample ID: LK0012

General Chemistry

Lot-Sample #...: H0H190105-008 **Work Order #...:** DJ4XN **Matrix.....:** SOLID
Date Sampled...: 08/18/00 **Date Received..:** 08/19/00
% Moisture.....: 18

PARAMETER	RESULT	RL	UNITS	METHOD	PREPARATION-ANALYSIS DATE	PREP BATCH #
Percent Moisture	**18.3**	**0.10**	**%**	**MCAWW 160.3 MOD**	**08/21-08/22/00**	**0235153**

Dilution Factor: 1 MDL.....:

IT CORP - FT. MCCLELLAN

Client Sample ID: LK0013

General Chemistry

Lot-Sample #...: H0H190105-009 **Work Order #...:** DJ4XP **Matrix.....:** SOLID
Date Sampled...: 08/18/00 **Date Received..:** 08/19/00
% Moisture.....: 15

PARAMETER	RESULT	RL	UNITS	METHOD	PREPARATION-ANALYSIS DATE	PREP BATCH #
Percent Moisture	**15.3**	**0.10**	**%**	**MCAWW 160.3 MOD**	**08/21-08/22/00**	**0235153**

Dilution Factor: 1 MDL.....:

IT CORP - FT. MCCLELLAN

Client Sample ID: LK0014

General Chemistry

Lot-Sample #...: H0H190105-010 Work Order #...: DJ4XQ Matrix.....: SOLID
Date Sampled...: 08/18/00 Date Received..: 08/19/00
% Moisture.....: 24

PARAMETER	RESULT	RL	UNITS	METHOD	PREPARATION-ANALYSIS DATE	PREP BATCH #
Percent Moisture	24.1	0.10	%	MCAWW 160.3 MOD	08/21-08/22/00	0235153

Dilution Factor: 1 MDL.....:

IT CORP - FT. MCCLELLAN

Client Sample ID: LK8001

General Chemistry

Lot-Sample #...: H0H190105-011 **Work Order #...:** DJ4XR **Matrix.....:** SOLID
Date Sampled...: 08/18/00 **Date Received..:** 08/19/00
% Moisture.....: 3.9

PARAMETER	RESULT	RL	UNITS	METHOD	PREPARATION-ANALYSIS DATE	PREP BATCH #
Paint Filter Test	**NO**		**No Units**	**SW846 9095**	**08/22/00**	**0235144**
		Dilution Factor: 1		MDL.....:		
Percent Moisture	**3.9**	**0.10**	**%**	**MCAWW 160.3 MOD**	**08/21-08/22/00**	**0235153**
		Dilution Factor: 1		MDL.....:		

IT CORP - FT. MCCLELLAN

Client Sample ID: LK8003

General Chemistry

Lot-Sample #...: H0H190105-012 Work Order #...: DJ4XV Matrix.....: SOLID
Date Sampled...: 08/18/00 Date Received..: 08/19/00
% Moisture.....: 5.2

PARAMETER	RESULT	RL	UNITS	METHOD	PREPARATION-ANALYSIS DATE	PREP BATCH #
Paint Filter Test	NO		No Units	SW846 9095	08/22/00	0235144
		Dilution Factor: 1		MDL.....:		
Percent Moisture	5.2	0.10	%	MCAWW 160.3 MOD	08/21-08/22/00	0235153
		Dilution Factor: 1		MDL.....:		

IT CORP - FT. MCCLELLAN

Client Sample ID: LK8004

General Chemistry

Lot-Sample #...: H0H190105-013 **Work Order #...:** DJ4XW **Matrix.....:** SOLID
Date Sampled...: 08/18/00 **Date Received..:** 08/19/00
% Moisture.....: 5.0

PARAMETER	RESULT	RL	UNITS	METHOD	PREPARATION-ANALYSIS DATE	PREP BATCH #
Paint Filter Test	**NO**		**No Units**	**SW846 9095**	**08/22/00**	**0235144**
		Dilution Factor: 1		MDL.....:		
Percent Moisture	**5.0**	**0.10**	**%**	**MCAWW 160.3 MOD**	**08/21-08/22/00**	**0235153**
		Dilution Factor: 1		MDL.....:		

SAMPLE DUPLICATE EVALUATION REPORT

General Chemistry

Client Lot #...: H0H190105 **Work Order #...:** DJ4XW-SMP DJ4XW-DUP **Matrix.....:** SOLID

Date Sampled...: 08/18/00 **Date Received..:** 08/19/00

% Moisture.....: 5.0

PARAM	RESULT	DUPLICATE RESULT	UNITS	RPD	RPD LIMIT	METHOD	PREPARATION-ANALYSIS DATE	PREP BATCH #
Paint Filter Test						SD Lot-Sample #:	H0H190105-013	
			No Units	0	(0-0.0)	SW846 9095	08/22/00	0235144

Dilution Factor: 1

Sample Receipt Documentation

SEVERN TRENT
Environmental Services

Sample Delivery Group Assignment Form

IT CORPORATION
FT McCLELLAN
UST 137

SDG# UST13701

*	DATE REC'D	LOT#	CLIENT ID	VOA	PAH	PEST	EXP	MET	PCB	PH	DRO	GRO	PAINT
				8021B	8310	8081A	8330	6010B	8082	9045	8015	8015	FILTER
1	8/19/00	H0H190105	LK0001	T	T			X					
2			LK0002	T	T			X					
3			LK0003	T	T			X					
4			LK0004	T	T			X					
5			LK0005	T	T			X					
6			LK0010	T	T			X					
7			LK0011	T	T			X					
8			LK0012	T	T			X					
9			LK0013	T	T			X					
10			LK0014	T	T			X					
11			LK8001					X			T	T	T
12			LK8003					X			T	T	T
13			LK8004					X			T	T	T
14													
15													
16													
17													
18													
19													
20													

NC = NORTH CANTON
T = STL TAMPA
D= STL DENVER
WS = STL WEST SACRAMENTO
P = PITTSBURGH
IT = IT CORP KNOX

MATRIX: SOIL
ANALYTICAL DUE: 8-23-00
REPORT DUE: 8-30-00
CLOSED? YES

8/19/009:04 AM

MOH190105

IT CORPORATION
A Member of The IT Group

ANALYSIS REQUEST AND CHAIN OF CUSTODY RECORD

Reference Document No: 137-081800-QSK

Project Number: 783149
Project Name: Fort McClellan, SAD TERC
Sample Coordinator: Oliver Allen
Turnaround Time: 48 hour Turn

Samples Shipment Date: 18 AUG 2000
Lab Destination: Quanterra Environmental Services - Knoxville
Lab Contact: John Reynolds
Project Contact: Randy McBride
Carrier/Waybill No.: Fed Ex/790343550853

Bill To: Duane Nielsen
312 Directors Drive
Knoxville TN 37923

Report To: Duane Nielsen
312 Directors Drive
Knoxville TN 37923

Special Instructions: 48 Hour Turn around

Possible Hazard Indentification:
Non-hazard ☐ Flammable ☐ Skin Irritant ☐ Poison B ☐ Unknown ☑

Sample Disposal:
Return to Client ☐ Disposal by Lab ☑ Archive (mos.)

1. Relinquished By (Signature/Affiliation) D.K. Allen	Date: 8-18-00 Time: 1600	1. Received By (Signature/Affiliation) Bryan K Stevenson	Date: 08-19-00 Time: 09:25
2. Relinquished By (Signature/Affiliation)	Date: Time:	2. Received By (Signature/Affiliation)	Date: Time:
3. Relinquished By (Signature/Affiliation)	Date: Time:	3. Received By (Signature/Affiliation)	Date: Time:

Comments: None

Custody seals intact received at 2°C BKD 8-19-00

Sample No	Sample Name	Sample Date	Sample Time	Container	Ctr Qty	Preservative	Requested Testing Program	Fil	CID	Condition On Receipt
LK0001	UST-137A1-CS01-CS-LK0001-REG	18 AUG 2000	14:00	8 oz CWM	1	None except cool to 4 C	Lead by 6010B	N		
LK0002	UST-137A1-CS02-CS-LK0002-REG	18 AUG 2000	14:08	8 oz CWM	1	None except cool to 4 C	Lead by 6010B	N		
LK0003	UST-137A1-CS03-CS-LK0003-REG	18 AUG 2000	14:00	8 oz CWM	1	None except cool to 4 C	Lead by 6010B	N		
LK0004	UST-137A1-CS04-CS-LK0004-REG	18 AUG 2000	14:15	8 oz CWM	1	None except cool to 4 C	Lead by 6010B	N		
LK0005	UST-137A1-CS05-CS-LK0005-REG	18 AUG 2000	13:30	8 oz CWM	1	None except cool to 4 C	Lead by 6010B	N		
LK0010	UST-137A2-CS01-CS-LK0010-REG	18 AUG 2000	09:30	8 oz CWM	1	None except cool to 4 C	Lead by 6010B	N		
LK0011	UST-137A2-CS02-CS-LK0011-REG	18 AUG 2000	09:30	8 oz CWM	1	None except cool to 4 C	Lead by 6010B	N		
LK0012	UST-137A2-CS03-CS-LK0012-REG	18 AUG 2000	09:30	8 oz CWM	1	None except cool to 4 C	Lead by 6010B	N		

IT CORPORATION
A Member of The IT Group

ANALYSIS REQUEST AND CHAIN OF CUSTODY RECORD

Reference Document No: 137-081800-QSK

Sample No	Sample Name	Sample Date	Sample Time	Container		Preservative	Requested Testing Program	Fil	CID	Condition On Receipt
LK0013	UST-137A2-CS04-CS-LK0013-REG	18 AUG 2000	09:30	8 oz CWM	1	None except cool to 4 C	Lead by 6010B	N		
LK0014	UST-137A2-CS05-CS-LK0014-REG	18 AUG 2000	09:30	8 oz CWM	1	None except cool to 4 C	Lead by 6010B	N		
LK8001	UST-137A1-SP01-SP-LK8001-REG	18 AUG 2000	14:30	8 oz CWM	1	None except cool to 4 C	Lead by 6010B	N		
LK8003	UST-137A2-SP02-SP-LK8003-REG	18 AUG 2000	14:30	8 oz CWM	1	None except cool to 4 C	Lead by 6010B	N		
LK8004	UST-137A1-SP02-SP-LK8004-REG	18 AUG 2000	14:30	8 oz CWM	1	None except cool to 4 C	Lead by 6010B	N		

STL KNOXVILLE

SAMPLE RECEIPT/CONDITION UPON RECEIPT ANOMALY CHECKLIST

Page 1 of 2

CLIENT: IT CORP PROJECT: FT McCLELLAN Lot No.: HDH190105

TO BE COMPLETED BY SAMPLE RECEIPT ASSOCIATE:

1. Sample Receipt:	YES	NO	NA
a. Do sample container labels match COC? (IDs, Dates, Times)	✓		
b. Is the cooler temperature within acceptance limits?	✓		
c. Were samples received with correct preservative (excluding Encore)?	✓		
d. Were custody seals present/intact on cooler and/or containers?	✓		
e. Were all of the samples listed on the COC received?	✓		
f. Were all of the sample containers received intact?	✓		
g. Were containers received for VOAs received without headspace?			✓
h. Were samples received in the appropriate containers?	✓		
i. Did you check for residual chlorine, if necessary?			✓
j. Were samples received within 1/2 of the (QAMP) holding time?	✓		
k. Were samples screened for radioactivity?			✓
l. Were client's sample documents (RFA/COC) received?	✓		
m. Has the RFA/COC been relinquished? (Signed, Dated, Timed)	✓		
n. Are test/parameters listed for each sample?	✓		
o. Is the matrix of the samples noted?	✓		
p. Is the date/time of sample collection noted?	✓		
q. Is the client and project name/No. identified?	✓		

SAMPLE RECEIVING ASSOCIATE: [signature] DATE: 8-19-00

TO BE COMPLETED BY PROJECT MANAGER :

1. Project manager "Sample Greet":	YES	NO	NA
a. Quote number to be logged-in under _____			
b. Informed Login associates of special instructions ?			

2. If custody seals were missing/not intact, was client notified? ___ ___ ___

PROJECT MANAGER : _____ DATE: _____

Client Sample ID	Analysis Requested	Condition (see legend)	Comments/Action

NA gom 8/21/00

☐ Client informed on _____ by _____. Person contacted: _____.

☐ Noted actions in comments section above.

☐ No action necessary; process as is.

Project Manager: _____ Date: _____

STL KNOXVILLE

SAMPLE RECEIPT/CONDITION UPON RECEIPT ANOMALY CHECKLIST
LEGEND

Item	Condition
Cooler:	1a Not received, COC available
	1b Leaking
	1c Other:_____
Temperature:	2a Temp Blank = _____
	2b Cooler Temp = _____
	(cooler temp should be used only if there is no temp blank)
Container:	3a Leaking
	3b Broken
	3c Extra
	3d No labels
	3e Headspace (VOA only)
	3f Other: _____
Samples:	4a Samples received but not on COC
	4b Samples not received but on COC
	4c Holding time expired
	4d Sample received with < ½ holding time remaining
	4e Sample preservative: _____
	4f Other: _____
Custody Seals:	5a None
	5b Not intact
	5c Other:_____
Chain of Custody (COC):	6a Not relinquished by client
	6b Incomplete information
	6c Other:_____
Container Labels:	7a Doesn't match COC
	7b Incomplete information
	7c Marking smeared
	7d Label torn
	7e Other:_____

Other (8): _____

_____

_____

_____

STL KNOXVILLE

SAMPLE LOG-IN (LOT SUMMARY) REVIEW CHECKLIST

CLIENT: IT PROJECT: Ft McClellan Lot No.: H0H190105

TO BE COMPETED BY PROJECT MANAGER:

	YES	NO	NA
1. Client Documents (Request for Analysis/Chain of Custody):			
a. Was QuanTIMS lot number documented on all paperwork?	X		
b. Was RFA/COC signed upon receipt, including date/time?	X		
c. Is preservative check (pH) noted on RFA/COC?			X
d. Is cooler temperature & custody seal condition noted on COC?	X		
2. Log-in (Lot Folder) Review:	YES	NO	NA
a. Do client IDs on Client Summaries match RFA/COC?	X		
b. Were tests/parameters assigned correctly?	X		
c. Were correct analytical and report due dates assigned?	X		
d. Has the correct fax due date been assigned to the lot?	X		
e. Is the correct report format noted in the lot summary?	X		
f. Is percent moisture logged for samples requiring this analysis?	X		
g. Are client assigned QC samples properly defined?			X
3. Contract/Subcontract Review:	YES	NO	NA
a. Is there a contract number or PO for this work?			X
b If the purchase order number is given, is it noted in Lot header?			X
c. If samples were subcontracted, was copy of COC in folder?		X	~~X~~ gm 8/21/00
4. SDG Review:	YES	NO	NA
a. If SDG is required, is SDG form in Lot folder?	X		~~X~~ gm 8/21/00
b Is SDG number noted in Lot header & sample comments?	X		X
c. If SDG is complete, has the due date been revised & marked closed?	X		
5. Checklist Review:	YES	NO	NA
a. Has Sample Receipt Checklist been filled-out?	X		
b. Was there a CUR?			X
c. Were all issues resolved?			X

LOT FOLDER REVIEWED BY: Jamie McKay DATE: 8/21/00

QA016R3.doc, 4/13/00

H0H020124 Analytical Report 1
Sample Receipt Documentation 48
Invoice 58
Total # of Pages 58

SEVERN TRENT SERVICES

STL Knoxville
5815 Middlebrook Pike
Knoxville, TN 37921-5947

Tel: 865-291-3000
Fax: 865-584-4315
www.stl-inc.com

ANALYTICAL REPORT

PROJECT NO. 800486

Ft. McClellan

Lot #: H0H020124

Duane Nielsen

The IT Group
312 Directors Drive
Knoxville, TN 37922

SEVERN TRENT LABORATORIES, INC.

John Reynolds
Project Manager

August 16, 2000

SAMPLE SUMMARY

H0H020124

WO #	SAMPLE#	CLIENT SAMPLE ID	DATE	TIME
DH6V8	001	080100-TB	08/01/00	08:0
DH6V9	002	LK8002	08/01/00	10:3

NOTE(S):

- The analytical results of the samples listed above are presented on the following pages.
- All calculations are performed before rounding to avoid round-off errors in calculated results.
- Results noted as "ND" were not detected at or above the stated limit.
- This report must not be reproduced, except in full, without the written approval of the laboratory.
- Results for the following parameters are never reported on a dry weight basis: color, corrosivity, density, flashpoint, ignitability, layers, odor, paint filter test, pH, porosity pressure, reactivity, redox potential, specific gravity, spot tests, solids, solubility, temperature, viscosity, and weight.

ANALYTICAL METHODS SUMMARY

H0H020124

PARAMETER	ANALYTICAL METHOD
Chlorinated Herbicides by GC	SW846 8151A
Corrosivity	SW846 9045A
Inductively Coupled Plasma (ICP) Metals	SW846 6010B
Mercury in Liquid Waste (Manual Cold-Vapor)	SW846 7470A
Organochlorine Pesticides	SW846 8081A
Pensky-Martens Method for Determining Ignitability	SW846 1010
PCBs by SW-846 8082	SW846 8082
Reactive Cyanide	SW846 7.3.3
Reactive Sulfide	SW846 7.3.4
Semivolatile Organic Compounds by GC/MS	SW846 8270C
Trace Inductively Coupled Plasma (ICP) Metals	SW846 6010B
Volatile Organics by GC/MS	SW846 8260B

References:

SW846 "Test Methods for Evaluating Solid Waste, Physical/Chemical Methods", Third Edition, November 1986 and its updates.

PROJECT NARRATIVE
H0H020124

The results reported herein are applicable to the samples submitted for analysis only.

The original chain of custody documentation is included with this report.

Sample Receipt

The container label for sample LK8002 was not noted with the collection time. The sample was processed per the collection time listed on the RFA/COC.

Two – one liter containers were received for sample LK8002 but were not listed on the chain of custody.

Subcontract

The following analyses were performed by STL Pittsburgh, 450 William Pitt Way, Pittsburgh, PA 15238: Semi-Volatiles (SW846 8270C), Pesticides (SW846 8081A), PCBs (SW846 8082), Metals (SW846 6010B/7470A) and Herbicides (SW846 8151A).

The following analyses were performed by STL North Canton, 4101 Shuffel Drive NW, North Canton, OH 44720: Flashpoint (SW846 1010) Reactive Cyanide (SW846 7.3.3), Reactive Sulfide (SW846 7.3.4) and Corrosivity (SW846 9045A).

Quality Control

All holding times and QC criteria were met with the following exceptions:

<u>Semi-Volatiles</u>

The laboratory control sample recoveries of N-nitroso-di-n-propylamine and the RPD of 4-nitrophenol in the laboratory control sample duplicate were outside control limits. However, as the analytes were not detected in the associated samples, and all other spike analyte results were acceptable, the results are submitted as is.

This report shall not be reproduced except in full, without the written approval of the laboratory.

STL Knoxville (formerly Quanterra Incorporated), Knoxville Laboratory maintains the following certifications, approvals and accreditations: California ELAP Cert. #2100, Connecticut DPH Cert. #PH-0233, Florida DOH SDWA Cert. #87293, Florida DOH Environmental Water Cert. #E87177, Florida DEP CompQAP #880566, Georgia EPD by US EPA Region IV, Hawaii DOH, Kentucky DEP Lab ID #90101, Maryland DHMH Cert. #277, Massachusetts Cert. #M-TN009, New York DOH Lab #10781, North Carolina DEHNR Cert. #64, North Dakota DOHCL Cert. #R-134, Ohio EPA VAP #CL0059, Oklahoma DEQ ID #9415, South Carolina DHEC Lab ID #84001, Tennessee DOH Lab ID #02014, Tennessee DEC UST, Utah DOH Cust. ID QUAN#, Virginia DGS Lab ID #00165, Washington DOE Lab #C120, Wisconsin DNR Lab ID #998044300, AALA Cert. #486.01, US Army Corps of Engineers, Naval Facilities Engineering Service Center, and USDA Soil Permit #S-3929. This list of approvals is subject to change and does not imply that laboratory certification is available for all parameters reported in this environmental sample data report.

EXECUTIVE SUMMARY - Detection Highlights

H0H020124

PARAMETER	RESULT	REPORTING LIMIT	UNITS	ANALYTICAL METHOD
080100-TB 08/01/00 08:00 001				
Acetone	2.0 J	10	ug/L	SW846 8260B
Carbon disulfide	0.12 J	1.0	ug/L	SW846 8260B
Methylene chloride	1.1 B	1.0	ug/L	SW846 8260B
Vinyl chloride	0.12 J	2.0	ug/L	SW846 8260B
LK8002 08/01/00 10:30 002				
Endosulfan I	0.018 J,P	0.050	ug/L	SW846 8081A
Endrin	0.014 J,P	0.050	ug/L	SW846 8081A
4,4'-DDT	0.039 J	0.050	ug/L	SW846 8081A
2,4-DB	4.5 P	4.0	ug/L	SW846 8151A
Zinc	5.1 B	20.0	ug/L	SW846 6010B
Aluminum	62.6 B	200	ug/L	SW846 6010B
Arsenic	11.5	10.0	ug/L	SW846 6010B
Barium	49.4 B	200	ug/L	SW846 6010B
Calcium	11400	5000	ug/L	SW846 6010B
Iron	3510	100	ug/L	SW846 6010B
Magnesium	7510	5000	ug/L	SW846 6010B
Manganese	109	15.0	ug/L	SW846 6010B
Lead	8.2	3.0	ug/L	SW846 6010B
Vanadium	3.3 B	50.0	ug/L	SW846 6010B
Potassium	1840 B	5000	ug/L	SW846 6010B
Sodium	3990 B	5000	ug/L	SW846 6010B
2-Methylnaphthalene	230	200	ug/L	SW846 8270C
Naphthalene	1100	200	ug/L	SW846 8270C
Benzene	110 J	200	ug/L	SW846 8260B
n-Butylbenzene	110 J	200	ug/L	SW846 8260B
2-Chlorotoluene	620	200	ug/L	SW846 8260B
4-Chlorotoluene	160 J	200	ug/L	SW846 8260B
Ethylbenzene	78 J	200	ug/L	SW846 8260B
Methylene chloride	170 J,B	200	ug/L	SW846 8260B
Naphthalene	1300	200	ug/L	SW846 8260B
Styrene	160 J	200	ug/L	SW846 8260B
Toluene	510	200	ug/L	SW846 8260B
1,2,4-Trimethylbenzene	5100	200	ug/L	SW846 8260B
1,3,5-Trimethylbenzene	1400	200	ug/L	SW846 8260B
o-Xylene	5100	200	ug/L	SW846 8260B
m-Xylene & p-Xylene	9300	200	ug/L	SW846 8260B
Flashpoint	>180		deg F	SW846 1010
Corrosivity	7.5		No Units	SW846 9045A

IT CORP - FT. MCCLELLAN

Client Sample ID: 080100-TB

GC/MS Volatiles

Lot-Sample #...: H0H020124-001 **Work Order #...:** DH6V8101 **Matrix.....:** WATER
Date Sampled...: 08/01/00 **Date Received..:** 08/02/00
Prep Date.....: 08/02/00 **Analysis Date..:** 08/02/00
Prep Batch #...: 0215262
Dilution Factor: 1 **Method.....:** SW846 8260B

PARAMETER	RESULT	REPORTING LIMIT	UNITS
Acetone	**2.0 J**	**10**	**ug/L**
Benzene	ND	1.0	ug/L
Bromobenzene	ND	1.0	ug/L
Bromochloromethane	ND	1.0	ug/L
Bromodichloromethane	ND	1.0	ug/L
Bromoform	ND	1.0	ug/L
Bromomethane	ND	2.0	ug/L
2-Butanone	ND	5.0	ug/L
n-Butylbenzene	ND	1.0	ug/L
sec-Butylbenzene	ND	1.0	ug/L
tert-Butylbenzene	ND	1.0	ug/L
Carbon disulfide	**0.12 J**	**1.0**	**ug/L**
Carbon tetrachloride	ND	1.0	ug/L
Chlorobenzene	ND	1.0	ug/L
Chlorodibromomethane	ND	1.0	ug/L
Chloroethane	ND	2.0	ug/L
Chloroform	ND	1.0	ug/L
Chloromethane	ND	2.0	ug/L
2-Chlorotoluene	ND	1.0	ug/L
4-Chlorotoluene	ND	1.0	ug/L
1,2-Dibromo-3-chloro-propane	ND	2.0	ug/L
1,2-Dibromoethane	ND	1.0	ug/L
Dibromomethane	ND	1.0	ug/L
1,2-Dichlorobenzene	ND	1.0	ug/L
1,3-Dichlorobenzene	ND	1.0	ug/L
1,4-Dichlorobenzene	ND	1.0	ug/L
Dichlorodifluoromethane	ND	2.0	ug/L
1,1-Dichloroethane	ND	1.0	ug/L
1,2-Dichloroethane	ND	1.0	ug/L
1,1-Dichloroethene	ND	1.0	ug/L
cis-1,2-Dichloroethene	ND	1.0	ug/L
trans-1,2-Dichloroethene	ND	1.0	ug/L
1,2-Dichloropropane	ND	1.0	ug/L
1,3-Dichloropropane	ND	1.0	ug/L
2,2-Dichloropropane	ND	1.0	ug/L
1,1-Dichloropropene	ND	1.0	ug/L
cis-1,3-Dichloropropene	ND	1.0	ug/L
trans-1,3-Dichloropropene	ND	1.0	ug/L

(Continued on next page)

IT CORP - FT. MCCLELLAN

Client Sample ID: 080100-TB

GC/MS Volatiles

Lot-Sample #...: H0H020124-001 **Work Order #...:** DH6V8101 **Matrix.....:** WATER

PARAMETER	RESULT	REPORTING LIMIT	UNITS
Ethylbenzene	ND	1.0	ug/L
Hexachlorobutadiene	ND	1.0	ug/L
2-Hexanone	ND	5.0	ug/L
Isopropylbenzene	ND	1.0	ug/L
p-Isopropyltoluene	ND	1.0	ug/L
Methylene chloride	**1.1 B**	**1.0**	**ug/L**
4-Methyl-2-pentanone	ND	5.0	ug/L
Naphthalene	ND	1.0	ug/L
n-Propylbenzene	ND	1.0	ug/L
Styrene	ND	1.0	ug/L
1,1,1,2-Tetrachloroethane	ND	1.0	ug/L
1,1,2,2-Tetrachloroethane	ND	1.0	ug/L
Tetrachloroethene	ND	1.0	ug/L
Toluene	ND	1.0	ug/L
1,2,3-Trichlorobenzene	ND	1.0	ug/L
1,2,4-Trichloro-benzene	ND	1.0	ug/L
1,1,1-Trichloroethane	ND	1.0	ug/L
1,1,2-Trichloroethane	ND	1.0	ug/L
Trichloroethene	ND	1.0	ug/L
Trichlorofluoromethane	ND	2.0	ug/L
1,2,3-Trichloropropane	ND	1.0	ug/L
1,2,4-Trimethylbenzene	ND	1.0	ug/L
1,3,5-Trimethylbenzene	ND	1.0	ug/L
Vinyl chloride	**0.12 J**	**2.0**	**ug/L**
o-Xylene	ND	1.0	ug/L
m-Xylene & p-Xylene	ND	1.0	ug/L

SURROGATE	PERCENT RECOVERY	RECOVERY LIMITS
Dibromofluoromethane	98	(73 - 126)
1,2-Dichloroethane-d4	103	(67 - 131)
Toluene-d8	100	(80 - 123)
Bromofluorobenzene	105	(75 - 140)

NOTE(S):

J Estimated result. Result is less than RL.

B Method blank contamination. The associated method blank contains the target analyte at a reportable level.

IT CORP - FT. MCCLELLAN

Client Sample ID: LK8002

GC/MS Volatiles

Lot-Sample #...: H0H020124-002 Work Order #...: DH6V9108 Matrix.....: WATER
Date Sampled...: 08/01/00 Date Received..: 08/02/00
Prep Date.....: 08/03/00 Analysis Date..: 08/03/00
Prep Batch #...: 0216170
Dilution Factor: 200 Method.....: SW846 8260B

PARAMETER	RESULT	REPORTING LIMIT	UNITS
Acetone	ND	2000	ug/L
Benzene	**110 J**	**200**	**ug/L**
Bromobenzene	ND	200	ug/L
Bromochloromethane	ND	200	ug/L
Bromodichloromethane	ND	200	ug/L
Bromoform	ND	200	ug/L
Bromomethane	ND	400	ug/L
2-Butanone	ND	1000	ug/L
n-Butylbenzene	**110 J**	**200**	**ug/L**
sec-Butylbenzene	ND	200	ug/L
tert-Butylbenzene	ND	200	ug/L
Carbon disulfide	ND	200	ug/L
Carbon tetrachloride	ND	200	ug/L
Chlorobenzene	ND	200	ug/L
Chlorodibromomethane	ND	200	ug/L
Chloroethane	ND	400	ug/L
Chloroform	ND	200	ug/L
Chloromethane	ND	400	ug/L
2-Chlorotoluene	**620**	**200**	**ug/L**
4-Chlorotoluene	**160 J**	**200**	**ug/L**
1,2-Dibromo-3-chloro-propane	ND	400	ug/L
1,2-Dibromoethane	ND	200	ug/L
Dibromomethane	ND	200	ug/L
1,2-Dichlorobenzene	ND	200	ug/L
1,3-Dichlorobenzene	ND	200	ug/L
1,4-Dichlorobenzene	ND	200	ug/L
Dichlorodifluoromethane	ND	400	ug/L
1,1-Dichloroethane	ND	200	ug/L
1,2-Dichloroethane	ND	200	ug/L
1,1-Dichloroethene	ND	200	ug/L
cis-1,2-Dichloroethene	ND	200	ug/L
trans-1,2-Dichloroethene	ND	200	ug/L
1,2-Dichloropropane	ND	200	ug/L
1,3-Dichloropropane	ND	200	ug/L
2,2-Dichloropropane	ND	200	ug/L
1,1-Dichloropropene	ND	200	ug/L
cis-1,3-Dichloropropene	ND	200	ug/L
trans-1,3-Dichloropropene	ND	200	ug/L

(Continued on next page)

IT CORP - FT. MCCLELLAN

Client Sample ID: LK8002

GC/MS Volatiles

Lot-Sample #...: H0H020124-002 **Work Order #...:** DH6V9108 **Matrix.....:** WATER

PARAMETER	RESULT	REPORTING LIMIT	UNITS
Ethylbenzene	**78 J**	**200**	**ug/L**
Hexachlorobutadiene	ND	200	ug/L
2-Hexanone	ND	1000	ug/L
Isopropylbenzene	ND	200	ug/L
p-Isopropyltoluene	ND	200	ug/L
Methylene chloride	**170 J,B**	**200**	**ug/L**
4-Methyl-2-pentanone	ND	1000	ug/L
Naphthalene	**1300**	**200**	**ug/L**
n-Propylbenzene	ND	200	ug/L
Styrene	**160 J**	**200**	**ug/L**
1,1,1,2-Tetrachloroethane	ND	200	ug/L
1,1,2,2-Tetrachloroethane	ND	200	ug/L
Tetrachloroethene	ND	200	ug/L
Toluene	**510**	**200**	**ug/L**
1,2,3-Trichlorobenzene	ND	200	ug/L
1,2,4-Trichloro-benzene	ND	200	ug/L
1,1,1-Trichloroethane	ND	200	ug/L
1,1,2-Trichloroethane	ND	200	ug/L
Trichloroethene	ND	200	ug/L
Trichlorofluoromethane	ND	400	ug/L
1,2,3-Trichloropropane	ND	200	ug/L
1,2,4-Trimethylbenzene	**5100**	**200**	**ug/L**
1,3,5-Trimethylbenzene	**1400**	**200**	**ug/L**
Vinyl chloride	ND	400	ug/L
o-Xylene	**5100**	**200**	**ug/L**
m-Xylene & p-Xylene	**9300**	**200**	**ug/L**

SURROGATE	PERCENT RECOVERY	RECOVERY LIMITS
Dibromofluoromethane	98	(73 - 126)
1,2-Dichloroethane-d4	100	(67 - 131)
Toluene-d8	102	(80 - 123)
Bromofluorobenzene	102	(75 - 140)

NOTE(S):

J Estimated result. Result is less than RL.

B Method blank contamination. The associated method blank contains the target analyte at a reportable level.

METHOD BLANK REPORT

GC/MS Volatiles

Client Lot #...: H0H020124 **Work Order #...:** DH76P101 **Matrix.....:** WATER
MB Lot-Sample #: H0H020000-262

Prep Date.....: 08/02/00
Analysis Date..: 08/02/00 **Prep Batch #...:** 0215262
Dilution Factor: 1

PARAMETER	RESULT	REPORTING LIMIT	UNITS	METHOD
Acetone	ND	10	ug/L	SW846 8260B
Benzene	ND	1.0	ug/L	SW846 8260B
Bromobenzene	ND	1.0	ug/L	SW846 8260B
Bromochloromethane	ND	1.0	ug/L	SW846 8260B
Bromodichloromethane	ND	1.0	ug/L	SW846 8260B
Bromoform	ND	1.0	ug/L	SW846 8260B
Bromomethane	ND	2.0	ug/L	SW846 8260B
2-Butanone	ND	5.0	ug/L	SW846 8260B
n-Butylbenzene	ND	1.0	ug/L	SW846 8260B
sec-Butylbenzene	ND	1.0	ug/L	SW846 8260B
tert-Butylbenzene	ND	1.0	ug/L	SW846 8260B
Carbon disulfide	ND	1.0	ug/L	SW846 8260B
Carbon tetrachloride	ND	1.0	ug/L	SW846 8260B
Chlorobenzene	ND	1.0	ug/L	SW846 8260B
Chlorodibromomethane	ND	1.0	ug/L	SW846 8260B
Chloroethane	ND	2.0	ug/L	SW846 8260B
Chloroform	ND	1.0	ug/L	SW846 8260B
Chloromethane	ND	2.0	ug/L	SW846 8260B
2-Chlorotoluene	ND	1.0	ug/L	SW846 8260B
4-Chlorotoluene	ND	1.0	ug/L	SW846 8260B
1,2-Dibromo-3-chloro-propane	ND	2.0	ug/L	SW846 8260B
1,2-Dibromoethane	ND	1.0	ug/L	SW846 8260B
Dibromomethane	ND	1.0	ug/L	SW846 8260B
1,2-Dichlorobenzene	ND	1.0	ug/L	SW846 8260B
1,3-Dichlorobenzene	ND	1.0	ug/L	SW846 8260B
1,4-Dichlorobenzene	ND	1.0	ug/L	SW846 8260B
Dichlorodifluoromethane	ND	2.0	ug/L	SW846 8260B
1,1-Dichloroethane	ND	1.0	ug/L	SW846 8260B
1,2-Dichloroethane	ND	1.0	ug/L	SW846 8260B
1,1-Dichloroethene	ND	1.0	ug/L	SW846 8260B
cis-1,2-Dichloroethene	ND	1.0	ug/L	SW846 8260B
trans-1,2-Dichloroethene	ND	1.0	ug/L	SW846 8260B
1,2-Dichloropropane	ND	1.0	ug/L	SW846 8260B
1,3-Dichloropropane	ND	1.0	ug/L	SW846 8260B
2,2-Dichloropropane	ND	1.0	ug/L	SW846 8260B
1,1-Dichloropropene	ND	1.0	ug/L	SW846 8260B
cis-1,3-Dichloropropene	ND	1.0	ug/L	SW846 8260B
trans-1,3-Dichloropropene	ND	1.0	ug/L	SW846 8260B
Ethylbenzene	ND	1.0	ug/L	SW846 8260B
Hexachlorobutadiene	ND	1.0	ug/L	SW846 8260B

(Continued on next page)

METHOD BLANK REPORT

GC/MS Volatiles

Client Lot #...: H0H020124 **Work Order #...:** DH76P101 **Matrix.....:** WATER

PARAMETER	RESULT	REPORTING LIMIT	UNITS	METHOD
2-Hexanone	ND	5.0	ug/L	SW846 8260B
Isopropylbenzene	ND	1.0	ug/L	SW846 8260B
p-Isopropyltoluene	ND	1.0	ug/L	SW846 8260B
Methylene chloride	**0.37 J**	**1.0**	**ug/L**	**SW846 8260B**
4-Methyl-2-pentanone	ND	5.0	ug/L	SW846 8260B
Naphthalene	ND	1.0	ug/L	SW846 8260B
n-Propylbenzene	ND	1.0	ug/L	SW846 8260B
Styrene	ND	1.0	ug/L	SW846 8260B
1,1,1,2-Tetrachloroethane	ND	1.0	ug/L	SW846 8260B
1,1,2,2-Tetrachloroethane	ND	1.0	ug/L	SW846 8260B
Tetrachloroethene	ND	1.0	ug/L	SW846 8260B
Toluene	ND	1.0	ug/L	SW846 8260B
1,2,3-Trichlorobenzene	**0.11 J**	**1.0**	**ug/L**	**SW846 8260B**
1,2,4-Trichloro-benzene	ND	1.0	ug/L	SW846 8260B
1,1,1-Trichloroethane	ND	1.0	ug/L	SW846 8260B
1,1,2-Trichloroethane	ND	1.0	ug/L	SW846 8260B
Trichloroethene	ND	1.0	ug/L	SW846 8260B
Trichlorofluoromethane	ND	2.0	ug/L	SW846 8260B
1,2,3-Trichloropropane	ND	1.0	ug/L	SW846 8260B
1,2,4-Trimethylbenzene	ND	1.0	ug/L	SW846 8260B
1,3,5-Trimethylbenzene	ND	1.0	ug/L	SW846 8260B
Vinyl chloride	ND	2.0	ug/L	SW846 8260B
o-Xylene	ND	1.0	ug/L	SW846 8260B
m-Xylene & p-Xylene	ND	1.0	ug/L	SW846 8260B

SURROGATE	PERCENT RECOVERY	RECOVERY LIMITS
Dibromofluoromethane	102	(73 - 126)
1,2-Dichloroethane-d4	105	(67 - 131)
Toluene-d8	100	(80 - 123)
Bromofluorobenzene	109	(75 - 140)

NOTE(S):

Calculations are performed before rounding to avoid round-off errors in calculated results.

J Estimated result. Result is less than RL.

LABORATORY CONTROL SAMPLE DATA REPORT

GC/MS Volatiles

Client Lot #...: H0H020124 **Work Order #...:** DH76P102-LCS **Matrix.....:** WATER
LCS Lot-Sample#: H0H020000-262 DH76P103-LCSD
Prep Date.....: 08/02/00 **Analysis Date..:** 08/02/00
Prep Batch #...: 0215262
Dilution Factor: 1

PARAMETER	SPIKE AMOUNT	MEASURED AMOUNT	UNITS	PERCENT RECOVERY	RPD	METHOD
Benzene	**10.0**	**10.1**	**ug/L**	**101**		**SW846 8260B**
	10.0	**9.96**	**ug/L**	**100**	**1.1**	**SW846 8260B**
Chlorobenzene	**10.0**	**9.68**	**ug/L**	**97**		**SW846 8260B**
	10.0	**9.80**	**ug/L**	**98**	**1.2**	**SW846 8260B**
1,1-Dichloroethene	**10.0**	**10.2**	**ug/L**	**102**		**SW846 8260B**
	10.0	**10.1**	**ug/L**	**101**	**0.97**	**SW846 8260B**
Toluene	**10.0**	**9.99**	**ug/L**	**100**		**SW846 8260B**
	10.0	**9.85**	**ug/L**	**98**	**1.4**	**SW846 8260B**
Trichloroethene	**10.0**	**10.5**	**ug/L**	**105**		**SW846 8260B**
	10.0	**10.3**	**ug/L**	**103**	**1.1**	**SW846 8260B**

SURROGATE	PERCENT RECOVERY	RECOVERY LIMITS
Dibromofluoromethane	100	(73 - 126)
	101	(73 - 126)
1,2-Dichloroethane-d4	103	(67 - 131)
	102	(67 - 131)
Toluene-d8	100	(80 - 123)
	99	(80 - 123)
Bromofluorobenzene	100	(75 - 140)
	104	(75 - 140)

NOTE(S):

Calculations are performed before rounding to avoid round-off errors in calculated results.

Bold print denotes control parameters

LABORATORY CONTROL SAMPLE EVALUATION REPORT

GC/MS Volatiles

Client Lot #...: H0H020124 **Work Order #...:** DH76P102-LCS **Matrix.....:** WATER
LCS Lot-Sample#: H0H020000-262 DH76P103-LCSD
Prep Date.....: 08/02/00 **Analysis Date..:** 08/02/00
Prep Batch #...: 0215262
Dilution Factor: 1

PARAMETER	PERCENT RECOVERY	RECOVERY LIMITS	RPD	RPD LIMITS	METHOD
Benzene	**101**	**(75 - 120)**			**SW846 8260B**
	100	**(75 - 120)**	**1.1**	**(0-20)**	**SW846 8260B**
Chlorobenzene	**97**	**(75 - 120)**			**SW846 8260B**
	98	**(75 - 120)**	**1.2**	**(0-20)**	**SW846 8260B**
1,1-Dichloroethene	**102**	**(65 - 131)**			**SW846 8260B**
	101	**(65 - 131)**	**0.97**	**(0-20)**	**SW846 8260B**
Toluene	**100**	**(76 - 120)**			**SW846 8260B**
	98	**(76 - 120)**	**1.4**	**(0-20)**	**SW846 8260B**
Trichloroethene	**105**	**(74 - 120)**			**SW846 8260B**
	103	**(74 - 120)**	**1.1**	**(0-20)**	**SW846 8260B**

SURROGATE	PERCENT RECOVERY	RECOVERY LIMITS
Dibromofluoromethane	100	(73 - 126)
	101	(73 - 126)
1,2-Dichloroethane-d4	103	(67 - 131)
	102	(67 - 131)
Toluene-d8	100	(80 - 123)
	99	(80 - 123)
Bromofluorobenzene	100	(75 - 140)
	104	(75 - 140)

NOTE(S):

Calculations are performed before rounding to avoid round-off errors in calculated results.

Bold print denotes control parameters

METHOD BLANK REPORT

GC/MS Volatiles

Client Lot #...: H0H020124 **Work Order #...:** DH8XL101 **Matrix.....:** WATER
MB Lot-Sample #: H0H030000-170

Prep Date.....: 08/03/00
Analysis Date..: 08/03/00 **Prep Batch #...:** 0216170
Dilution Factor: 1

PARAMETER	RESULT	REPORTING LIMIT	UNITS	METHOD
Acetone	ND	10	ug/L	SW846 8260B
Benzene	ND	1.0	ug/L	SW846 8260B
Bromobenzene	ND	1.0	ug/L	SW846 8260B
Bromochloromethane	ND	1.0	ug/L	SW846 8260B
Bromodichloromethane	ND	1.0	ug/L	SW846 8260B
Bromoform	ND	1.0	ug/L	SW846 8260B
Bromomethane	ND	2.0	ug/L	SW846 8260B
2-Butanone	ND	5.0	ug/L	SW846 8260B
n-Butylbenzene	ND	1.0	ug/L	SW846 8260B
sec-Butylbenzene	ND	1.0	ug/L	SW846 8260B
tert-Butylbenzene	ND	1.0	ug/L	SW846 8260B
Carbon disulfide	ND	1.0	ug/L	SW846 8260B
Carbon tetrachloride	ND	1.0	ug/L	SW846 8260B
Chlorobenzene	ND	1.0	ug/L	SW846 8260B
Chlorodibromomethane	ND	1.0	ug/L	SW846 8260B
Chloroethane	ND	2.0	ug/L	SW846 8260B
Chloroform	ND	1.0	ug/L	SW846 8260B
Chloromethane	ND	2.0	ug/L	SW846 8260B
2-Chlorotoluene	ND	1.0	ug/L	SW846 8260B
4-Chlorotoluene	ND	1.0	ug/L	SW846 8260B
1,2-Dibromo-3-chloro-propane	ND	2.0	ug/L	SW846 8260B
1,2-Dibromoethane	ND	1.0	ug/L	SW846 8260B
Dibromomethane	ND	1.0	ug/L	SW846 8260B
1,2-Dichlorobenzene	ND	1.0	ug/L	SW846 8260B
1,3-Dichlorobenzene	ND	1.0	ug/L	SW846 8260B
1,4-Dichlorobenzene	ND	1.0	ug/L	SW846 8260B
Dichlorodifluoromethane	ND	2.0	ug/L	SW846 8260B
1,1-Dichloroethane	ND	1.0	ug/L	SW846 8260B
1,2-Dichloroethane	ND	1.0	ug/L	SW846 8260B
1,1-Dichloroethene	ND	1.0	ug/L	SW846 8260B
cis-1,2-Dichloroethene	ND	1.0	ug/L	SW846 8260B
trans-1,2-Dichloroethene	ND	1.0	ug/L	SW846 8260B
1,2-Dichloropropane	ND	1.0	ug/L	SW846 8260B
1,3-Dichloropropane	ND	1.0	ug/L	SW846 8260B
2,2-Dichloropropane	ND	1.0	ug/L	SW846 8260B
1,1-Dichloropropene	ND	1.0	ug/L	SW846 8260B
cis-1,3-Dichloropropene	ND	1.0	ug/L	SW846 8260B
trans-1,3-Dichloropropene	ND	1.0	ug/L	SW846 8260B
Ethylbenzene	ND	1.0	ug/L	SW846 8260B
Hexachlorobutadiene	ND	1.0	ug/L	SW846 8260B

(Continued on next page)

METHOD BLANK REPORT

GC/MS Volatiles

Client Lot #...: H0H020124 **Work Order #...:** DH8XL101 **Matrix.....:** WATER

PARAMETER	RESULT	REPORTING LIMIT	UNITS	METHOD
2-Hexanone	ND	5.0	ug/L	SW846 8260B
Isopropylbenzene	ND	1.0	ug/L	SW846 8260B
p-Isopropyltoluene	ND	1.0	ug/L	SW846 8260B
Methylene chloride	**0.58 J**	**1.0**	**ug/L**	**SW846 8260B**
4-Methyl-2-pentanone	ND	5.0	ug/L	SW846 8260B
Naphthalene	ND	1.0	ug/L	SW846 8260B
n-Propylbenzene	ND	1.0	ug/L	SW846 8260B
Styrene	ND	1.0	ug/L	SW846 8260B
1,1,1,2-Tetrachloroethane	ND	1.0	ug/L	SW846 8260B
1,1,2,2-Tetrachloroethane	ND	1.0	ug/L	SW846 8260B
Tetrachloroethene	ND	1.0	ug/L	SW846 8260B
Toluene	ND	1.0	ug/L	SW846 8260B
1,2,3-Trichlorobenzene	ND	1.0	ug/L	SW846 8260B
1,2,4-Trichloro-benzene	ND	1.0	ug/L	SW846 8260B
1,1,1-Trichloroethane	ND	1.0	ug/L	SW846 8260B
1,1,2-Trichloroethane	ND	1.0	ug/L	SW846 8260B
Trichloroethene	ND	1.0	ug/L	SW846 8260B
Trichlorofluoromethane	ND	2.0	ug/L	SW846 8260B
1,2,3-Trichloropropane	ND	1.0	ug/L	SW846 8260B
1,2,4-Trimethylbenzene	ND	1.0	ug/L	SW846 8260B
1,3,5-Trimethylbenzene	ND	1.0	ug/L	SW846 8260B
Vinyl chloride	ND	2.0	ug/L	SW846 8260B
o-Xylene	ND	1.0	ug/L	SW846 8260B
m-Xylene & p-Xylene	ND	1.0	ug/L	SW846 8260B

SURROGATE	PERCENT RECOVERY	RECOVERY LIMITS
Dibromofluoromethane	102	(73 - 126)
1,2-Dichloroethane-d4	104	(67 - 131)
Toluene-d8	99	(80 - 123)
Bromofluorobenzene	105	(75 - 140)

NOTE(S):

Calculations are performed before rounding to avoid round-off errors in calculated results.

J Estimated result. Result is less than RL.

LABORATORY CONTROL SAMPLE DATA REPORT

GC/MS Volatiles

Client Lot #...: H0H020124 **Work Order #...:** DH8XL102 **Matrix.....:** WATER
LCS Lot-Sample#: H0H030000-170
Prep Date.....: 08/03/00 **Analysis Date..:** 08/03/00
Prep Batch #...: 0216170
Dilution Factor: 1

PARAMETER	SPIKE AMOUNT	MEASURED AMOUNT	UNITS	PERCENT RECOVERY	METHOD
Benzene	**10.0**	**8.78**	**ug/L**	**88**	**SW846 8260B**
Chlorobenzene	**10.0**	**8.50**	**ug/L**	**85**	**SW846 8260B**
1,1-Dichloroethene	**10.0**	**8.07**	**ug/L**	**81**	**SW846 8260B**
Toluene	**10.0**	**8.60**	**ug/L**	**86**	**SW846 8260B**
Trichloroethene	**10.0**	**8.67**	**ug/L**	**87**	**SW846 8260B**

SURROGATE	PERCENT RECOVERY	RECOVERY LIMITS
Dibromofluoromethane	101	(73 - 126)
1,2-Dichloroethane-d4	100	(67 - 131)
Toluene-d8	100	(80 - 123)
Bromofluorobenzene	102	(75 - 140)

NOTE(S):

Calculations are performed before rounding to avoid round-off errors in calculated results.

Bold print denotes control parameters

LABORATORY CONTROL SAMPLE EVALUATION REPORT

GC/MS Volatiles

Client Lot #...: H0H020124 **Work Order #...:** DH8XL102 **Matrix.....:** WATER
LCS Lot-Sample#: H0H030000-170
Prep Date.....: 08/03/00 **Analysis Date..:** 08/03/00
Prep Batch #...: 0216170
Dilution Factor: 1

PARAMETER	PERCENT RECOVERY	RECOVERY LIMITS	METHOD
Benzene	**88**	**(75 - 120)**	**SW846 8260B**
Chlorobenzene	**85**	**(75 - 120)**	**SW846 8260B**
1,1-Dichloroethene	**81**	**(65 - 131)**	**SW846 8260B**
Toluene	**86**	**(76 - 120)**	**SW846 8260B**
Trichloroethene	**87**	**(74 - 120)**	**SW846 8260B**

SURROGATE	PERCENT RECOVERY	RECOVERY LIMITS
Dibromofluoromethane	101	(73 - 126)
1,2-Dichloroethane-d4	100	(67 - 131)
Toluene-d8	100	(80 - 123)
Bromofluorobenzene	102	(75 - 140)

NOTE(S):

Calculations are performed before rounding to avoid round-off errors in calculated results.

Bold print denotes control parameters

IT CORP - FT. MCCLELLAN

Client Sample ID: LK8002

GC/MS Semivolatiles

Lot-Sample #...: H0H020124-002 **Work Order #...:** DH6V9105 **Matrix.....:** WATER
Date Sampled...: 08/01/00 **Date Received..:** 08/02/00
Prep Date.....: 08/03/00 **Analysis Date..:** 08/07/00
Prep Batch #...: 0217121
Dilution Factor: 20 **Method.....:** SW846 8270C

PARAMETER	RESULT	REPORTING LIMIT	UNITS
Acenaphthene	ND	200	ug/L
Acenaphthylene	ND	200	ug/L
Anthracene	ND	200	ug/L
Benzo(a)anthracene	ND	200	ug/L
Benzo(a)pyrene	ND	200	ug/L
Benzo(b)fluoranthene	ND	200	ug/L
Benzo(k)fluoranthene	ND	200	ug/L
Benzo(ghi)perylene	ND	200	ug/L
bis(2-Chloroethoxy) methane	ND	200	ug/L
bis(2-Chloroethyl)-ether	ND	200	ug/L
bis(2-Ethylhexyl) phthalate	ND	200	ug/L
4-Bromophenyl phenyl ether	ND	200	ug/L
Butyl benzyl phthalate	ND	200	ug/L
Carbazole	ND	200	ug/L
4-Chloroaniline	ND	200	ug/L
4-Chloro-3-methylphenol	ND	200	ug/L
2-Chloronaphthalene	ND	200	ug/L
2-Chlorophenol	ND	200	ug/L
4-Chlorophenyl phenyl ether	ND	200	ug/L
Chrysene	ND	200	ug/L
Dibenz(a,h)anthracene	ND	200	ug/L
Dibenzofuran	ND	200	ug/L
1,2-Dichlorobenzene	ND	200	ug/L
1,3-Dichlorobenzene	ND	200	ug/L
1,4-Dichlorobenzene	ND	200	ug/L
3,3'-Dichlorobenzidine	ND	1000	ug/L
2,4-Dichlorophenol	ND	200	ug/L
Diethyl phthalate	ND	200	ug/L
2,4-Dimethylphenol	ND	200	ug/L
Dimethyl phthalate	ND	200	ug/L
Di-n-butyl phthalate	ND	200	ug/L
Di-n-octyl phthalate	ND	200	ug/L
2,4-Dinitrophenol	ND	1000	ug/L
4,6-Dinitro-2-methylphenol	ND	1000	ug/L

(Continued on next page)

IT CORP - FT. MCCLELLAN

Client Sample ID: LK8002

GC/MS Semivolatiles

Lot-Sample #...: H0H020124-002 **Work Order #...:** DH6V9105 **Matrix.....:** WATER

PARAMETER	RESULT	REPORTING LIMIT	UNITS
2,4-Dinitrotoluene	ND	200	ug/L
2,6-Dinitrotoluene	ND	200	ug/L
Fluoranthene	ND	200	ug/L
Fluorene	ND	200	ug/L
Hexachlorobenzene	ND	200	ug/L
Hexachlorobutadiene	ND	200	ug/L
Hexachlorocyclopenta-diene	ND	1000	ug/L
Hexachloroethane	ND	200	ug/L
Indeno(1,2,3-cd)pyrene	ND	200	ug/L
Isophorone	ND	200	ug/L
2-Methylnaphthalene	**230**	**200**	**ug/L**
2-Methylphenol	ND	200	ug/L
4-Methylphenol	ND	200	ug/L
Naphthalene	**1100**	**200**	**ug/L**
2-Nitroaniline	ND	1000	ug/L
3-Nitroaniline	ND	1000	ug/L
4-Nitroaniline	ND	1000	ug/L
Nitrobenzene	ND	200	ug/L
2-Nitrophenol	ND	200	ug/L
4-Nitrophenol	ND	1000	ug/L
N-Nitrosodi-n-propyl-amine	ND	200	ug/L
N-Nitrosodiphenylamine	ND	200	ug/L
2,2'-oxybis(1-Chloropropane)	ND	200	ug/L
Pentachlorophenol	ND	1000	ug/L
Phenanthrene	ND	200	ug/L
Phenol	ND	200	ug/L
Pyrene	ND	200	ug/L
1,2,4-Trichloro-benzene	ND	200	ug/L
2,4,5-Trichloro-phenol	ND	200	ug/L
2,4,6-Trichloro-phenol	ND	200	ug/L

SURROGATE	PERCENT RECOVERY	RECOVERY LIMITS
Phenol-d5	81	(10 - 113)
2-Fluorobiphenyl	78	(30 - 110)
Nitrobenzene-d5	81	(32 - 112)
Terphenyl-d14	78	(10 - 144)
2-Fluorophenol	77	(13 - 110)
2,4,6-Tribromophenol	56	(21 - 122)

METHOD BLANK REPORT

GC/MS Semivolatiles

Client Lot #...: H0H020124 **Work Order #...:** DHCQ8101 **Matrix.....:** WATER
MB Lot-Sample #: C0H040000-121

Prep Date.....: 08/03/00
Analysis Date..: 08/07/00 **Prep Batch #...:** 0217121
Dilution Factor: 1

PARAMETER	RESULT	REPORTING LIMIT	UNITS	METHOD
Acenaphthene	ND	10	ug/L	SW846 8270C
Acenaphthylene	ND	10	ug/L	SW846 8270C
Anthracene	ND	10	ug/L	SW846 8270C
Benzo(a)anthracene	ND	10	ug/L	SW846 8270C
Benzo(a)pyrene	ND	10	ug/L	SW846 8270C
Benzo(b)fluoranthene	ND	10	ug/L	SW846 8270C
Benzo(k)fluoranthene	ND	10	ug/L	SW846 8270C
Benzo(ghi)perylene	ND	10	ug/L	SW846 8270C
bis(2-Chloroethoxy) methane	ND	10	ug/L	SW846 8270C
bis(2-Chloroethyl)-ether	ND	10	ug/L	SW846 8270C
bis(2-Ethylhexyl) phthalate	ND	10	ug/L	SW846 8270C
4-Bromophenyl phenyl ether	ND	10	ug/L	SW846 8270C
Butyl benzyl phthalate	ND	10	ug/L	SW846 8270C
Carbazole	ND	10	ug/L	SW846 8270C
4-Chloroaniline	ND	10	ug/L	SW846 8270C
4-Chloro-3-methylphenol	ND	10	ug/L	SW846 8270C
2-Chloronaphthalene	ND	10	ug/L	SW846 8270C
2-Chlorophenol	ND	10	ug/L	SW846 8270C
4-Chlorophenyl phenyl ether	ND	10	ug/L	SW846 8270C
Chrysene	ND	10	ug/L	SW846 8270C
Dibenz(a,h)anthracene	ND	10	ug/L	SW846 8270C
Dibenzofuran	ND	10	ug/L	SW846 8270C
1,2-Dichlorobenzene	ND	10	ug/L	SW846 8270C
1,3-Dichlorobenzene	ND	10	ug/L	SW846 8270C
1,4-Dichlorobenzene	ND	10	ug/L	SW846 8270C
3,3'-Dichlorobenzidine	ND	50	ug/L	SW846 8270C
2,4-Dichlorophenol	ND	10	ug/L	SW846 8270C
Diethyl phthalate	ND	10	ug/L	SW846 8270C
2,4-Dimethylphenol	ND	10	ug/L	SW846 8270C
Dimethyl phthalate	ND	10	ug/L	SW846 8270C
Di-n-butyl phthalate	ND	10	ug/L	SW846 8270C
Di-n-octyl phthalate	ND	10	ug/L	SW846 8270C
2,4-Dinitrophenol	ND	50	ug/L	SW846 8270C
4,6-Dinitro-2-methylphenol	ND	50	ug/L	SW846 8270C
2,4-Dinitrotoluene	ND	10	ug/L	SW846 8270C

(Continued on next page)

METHOD BLANK REPORT

GC/MS Semivolatiles

Client Lot #...: H0H020124 **Work Order #...:** DHCQ8101 **Matrix.....:** WATER

PARAMETER	RESULT	REPORTING LIMIT	UNITS	METHOD
2,6-Dinitrotoluene	ND	10	ug/L	SW846 8270C
Fluoranthene	ND	10	ug/L	SW846 8270C
Fluorene	ND	10	ug/L	SW846 8270C
Hexachlorobenzene	ND	10	ug/L	SW846 8270C
Hexachlorobutadiene	ND	10	ug/L	SW846 8270C
Hexachlorocyclopenta-diene	ND	50	ug/L	SW846 8270C
Hexachloroethane	ND	10	ug/L	SW846 8270C
Indeno(1,2,3-cd)pyrene	ND	10	ug/L	SW846 8270C
Isophorone	ND	10	ug/L	SW846 8270C
2-Methylnaphthalene	ND	10	ug/L	SW846 8270C
2-Methylphenol	ND	10	ug/L	SW846 8270C
4-Methylphenol	ND	10	ug/L	SW846 8270C
Naphthalene	ND	10	ug/L	SW846 8270C
2-Nitroaniline	ND	50	ug/L	SW846 8270C
3-Nitroaniline	ND	50	ug/L	SW846 8270C
4-Nitroaniline	ND	50	ug/L	SW846 8270C
Nitrobenzene	ND	10	ug/L	SW846 8270C
2-Nitrophenol	ND	10	ug/L	SW846 8270C
4-Nitrophenol	ND	50	ug/L	SW846 8270C
N-Nitrosodi-n-propyl-amine	ND	10	ug/L	SW846 8270C
N-Nitrosodiphenylamine	ND	10	ug/L	SW846 8270C
2,2'-oxybis(1-Chloropropa	ND	10	ug/L	SW846 8270C
Pentachlorophenol	ND	50	ug/L	SW846 8270C
Phenanthrene	ND	10	ug/L	SW846 8270C
Phenol	ND	10	ug/L	SW846 8270C
Pyrene	ND	10	ug/L	SW846 8270C
1,2,4-Trichloro-benzene	ND	10	ug/L	SW846 8270C
2,4,5-Trichloro-phenol	ND	10	ug/L	SW846 8270C
2,4,6-Trichloro-phenol	ND	10	ug/L	SW846 8270C

SURROGATE	PERCENT RECOVERY	RECOVERY LIMITS
Phenol-d5	77	(10 - 113)
2-Fluorobiphenyl	67	(30 - 110)
Nitrobenzene-d5	69	(32 - 112)
Terphenyl-d14	87	(10 - 144)
2-Fluorophenol	71	(13 - 110)
2,4,6-Tribromophenol	71	(21 - 122)

NOTE(S):

Calculations are performed before rounding to avoid round-off errors in calculated results.

LABORATORY CONTROL SAMPLE DATA REPORT

GC/MS Semivolatiles

Client Lot #...: H0H020124 **Work Order #...:** DHCQ8102-LCS **Matrix.....:** WATER
LCS Lot-Sample#: C0H040000-121 DHCQ8103-LCSD
Prep Date.....: 08/03/00 **Analysis Date..:** 08/07/00
Prep Batch #...: 0217121
Dilution Factor: 1

PARAMETER	SPIKE AMOUNT	MEASURED AMOUNT	UNITS	PERCENT RECOVERY	RPD	METHOD
Acenaphthene	50.0	42.2	ug/L	84		SW846 8270C
	50.0	38.7	ug/L	77	8.6	SW846 8270C
4-Chloro-3-methylphenol	75.0	65.1	ug/L	87		SW846 8270C
	75.0	59.1	ug/L	79	9.7	SW846 8270C
2-Chlorophenol	75.0	56.2	ug/L	75		SW846 8270C
	75.0	54.0	ug/L	72	4.0	SW846 8270C
1,4-Dichlorobenzene	50.0	34.5	ug/L	69		SW846 8270C
	50.0	34.6	ug/L	69	0.28	SW846 8270C
2,4-Dinitrotoluene	50.0	27.9	ug/L	56		SW846 8270C
	50.0	23.9	ug/L	48	15	SW846 8270C
4-Nitrophenol	75.0	33.6	ug/L	45		SW846 8270C
	75.0	22.3 p	ug/L	30	40	SW846 8270C
N-Nitrosodi-n-propyl-amine	50.0	65.9 a	ug/L	132		SW846 8270C
	50.0	66.7 a	ug/L	133	1.2	SW846 8270C
Pentachlorophenol	75.0	75.4	ug/L	101		SW846 8270C
	75.0	51.6	ug/L	69	37	SW846 8270C
Phenol	75.0	58.2	ug/L	78		SW846 8270C
	75.0	56.6	ug/L	75	2.8	SW846 8270C
Pyrene	50.0	43.2	ug/L	86		SW846 8270C
	50.0	42.1	ug/L	84	2.6	SW846 8270C
1,2,4-Trichloro-benzene	50.0	35.1	ug/L	70		SW846 8270C
	50.0	33.3	ug/L	67	5.3	SW846 8270C

SURROGATE	PERCENT RECOVERY	RECOVERY LIMITS
Phenol-d5	69	(10 - 113)
	69	(10 - 113)
2-Fluorobiphenyl	90	(30 - 110)
	81	(30 - 110)
Nitrobenzene-d5	64	(32 - 112)
	62	(32 - 112)
Terphenyl-d14	84	(10 - 144)
	87	(10 - 144)
2-Fluorophenol	70	(13 - 110)
	67	(13 - 110)
2,4,6-Tribromophenol	76	(21 - 122)
	63	(21 - 122)

(Continued on next page)

LABORATORY CONTROL SAMPLE DATA REPORT

GC/MS Semivolatiles

Client Lot #...: H0H020124 **Work Order #...:** DHCQ8102-LCS **Matrix.....:** WATER
LCS Lot-Sample#: C0H040000-121 DHCQ8103-LCSD

SURROGATE	PERCENT RECOVERY	RECOVERY LIMITS

NOTE(S):

Calculations are performed before rounding to avoid round-off errors in calculated results.

Bold print denotes control parameters

p Relative percent difference (RPD) is outside stated control limits.

a Spiked analyte recovery is outside stated control limits.

LABORATORY CONTROL SAMPLE EVALUATION REPORT

GC/MS Semivolatiles

Client Lot #...: H0H020124 Work Order #...: DHCQ8102-LCS Matrix.....: WATER
LCS Lot-Sample#: C0H040000-121 DHCQ8103-LCSD
Prep Date.....: 08/03/00 Analysis Date..: 08/07/00
Prep Batch #...: 0217121
Dilution Factor: 1

PARAMETER	PERCENT RECOVERY	RECOVERY LIMITS	RPD	RPD LIMITS	METHOD
Acenaphthene	84	(39 - 118)			SW846 8270C
	77	(39 - 118)	8.6	(0-35)	SW846 8270C
4-Chloro-3-methylphenol	87	(29 - 124)			SW846 8270C
	79	(29 - 124)	9.7	(0-55)	SW846 8270C
2-Chlorophenol	75	(19 - 124)			SW846 8270C
	72	(19 - 124)	4.0	(0-43)	SW846 8270C
1,4-Dichlorobenzene	69	(28 - 110)			SW846 8270C
	69	(28 - 110)	0.28	(0-36)	SW846 8270C
2,4-Dinitrotoluene	56	(47 - 131)			SW846 8270C
	48	(47 - 131)	15	(0-32)	SW846 8270C
4-Nitrophenol	45	(19 - 144)			SW846 8270C
	30 p	(19 - 144)	40	(0-34)	SW846 8270C
N-Nitrosodi-n-propyl-amine	132 a	(30 - 115)			SW846 8270C
	133 a	(30 - 115)	1.2	(0-36)	SW846 8270C
Pentachlorophenol	101	(10 - 140)			SW846 8270C
	69	(10 - 140)	37	(0-56)	SW846 8270C
Phenol	78	(10 - 131)			SW846 8270C
	75	(10 - 131)	2.8	(0-43)	SW846 8270C
Pyrene	86	(46 - 130)			SW846 8270C
	84	(46 - 130)	2.6	(0-31)	SW846 8270C
1,2,4-Trichloro-benzene	70	(31 - 110)			SW846 8270C
	67	(31 - 110)	5.3	(0-37)	SW846 8270C

SURROGATE	PERCENT RECOVERY	RECOVERY LIMITS
Phenol-d5	69	(10 - 113)
	69	(10 - 113)
2-Fluorobiphenyl	90	(30 - 110)
	81	(30 - 110)
Nitrobenzene-d5	64	(32 - 112)
	62	(32 - 112)
Terphenyl-d14	84	(10 - 144)
	87	(10 - 144)
2-Fluorophenol	70	(13 - 110)
	67	(13 - 110)
2,4,6-Tribromophenol	76	(21 - 122)
	63	(21 - 122)

(Continued on next page)

LABORATORY CONTROL SAMPLE EVALUATION REPORT

GC/MS Semivolatiles

Client Lot #...: H0H020124 **Work Order #...:** DHCQ8102-LCS **Matrix.....:** WATER
LCS Lot-Sample#: C0H040000-121 DHCQ8103-LCSD

SURROGATE	PERCENT RECOVERY	RECOVERY LIMITS

NOTE(S):

Calculations are performed before rounding to avoid round-off errors in calculated results.

Bold print denotes control parameters

p Relative percent difference (RPD) is outside stated control limits.

a Spiked analyte recovery is outside stated control limits.

IT CORP - FT. MCCLELLAN

Client Sample ID: LK8002

GC Semivolatiles

Lot-Sample #...:	H0H020124-002	**Work Order #...:**	DH6V9106	**Matrix.....:**	WATER
Date Sampled...:	08/01/00	**Date Received..:**	08/02/00		
Prep Date.....:	08/03/00	**Analysis Date..:**	08/05/00		
Prep Batch #...:	0216507				
Dilution Factor:	1	**Method.....:**	SW846 8081A		

PARAMETER	RESULT	REPORTING LIMIT	UNITS
alpha-BHC	ND	0.050	ug/L
beta-BHC	ND	0.050	ug/L
delta-BHC	ND	0.050	ug/L
gamma-BHC (Lindane)	ND	0.050	ug/L
Heptachlor	ND	0.050	ug/L
Aldrin	ND	0.050	ug/L
Heptachlor epoxide	ND	0.050	ug/L
Endosulfan I	**0.018 J,P**	**0.050**	**ug/L**
Dieldrin	ND	0.050	ug/L
4,4'-DDE	ND	0.050	ug/L
Endrin	**0.014 J,P**	**0.050**	**ug/L**
Endrin ketone	ND	0.050	ug/L
Endrin aldehyde	ND	0.050	ug/L
Endosulfan II	ND	0.050	ug/L
4,4'-DDD	ND	0.050	ug/L
Endosulfan sulfate	ND	0.050	ug/L
4,4'-DDT	**0.039 J**	**0.050**	**ug/L**
Methoxychlor	ND	0.10	ug/L
alpha-Chlordane	ND	0.050	ug/L
gamma-Chlordane	ND	0.050	ug/L
Toxaphene	ND	2.0	ug/L

SURROGATE	PERCENT RECOVERY	RECOVERY LIMITS
Tetrachloro-m-xylene	70	(39 - 130)
Decachlorobiphenyl	94	(10 - 147)

NOTE(S):

J Estimated result. Result is less than RL.

P The percent difference between the original and confirmation analyses is greater than 25%.

METHOD BLANK REPORT

GC Semivolatiles

Client Lot #...: H0H020124 **Work Order #...:** DHCJ5101 **Matrix.....:** WATER
MB Lot-Sample #: C0H030000-507

Prep Date.....: 08/03/00
Analysis Date..: 08/04/00 **Prep Batch #...:** 0216507
Dilution Factor: 1

PARAMETER	RESULT	REPORTING LIMIT	UNITS	METHOD
alpha-BHC	ND	0.050	ug/L	SW846 8081A
beta-BHC	ND	0.050	ug/L	SW846 8081A
delta-BHC	ND	0.050	ug/L	SW846 8081A
gamma-BHC (Lindane)	ND	0.050	ug/L	SW846 8081A
Heptachlor	ND	0.050	ug/L	SW846 8081A
Aldrin	ND	0.050	ug/L	SW846 8081A
Heptachlor epoxide	ND	0.050	ug/L	SW846 8081A
Endosulfan I	ND	0.050	ug/L	SW846 8081A
Dieldrin	ND	0.050	ug/L	SW846 8081A
4,4'-DDE	ND	0.050	ug/L	SW846 8081A
Endrin	ND	0.050	ug/L	SW846 8081A
Endrin ketone	ND	0.050	ug/L	SW846 8081A
Endrin aldehyde	ND	0.050	ug/L	SW846 8081A
Endosulfan II	ND	0.050	ug/L	SW846 8081A
4,4'-DDD	ND	0.050	ug/L	SW846 8081A
Endosulfan sulfate	ND	0.050	ug/L	SW846 8081A
4,4'-DDT	ND	0.050	ug/L	SW846 8081A
Methoxychlor	ND	0.10	ug/L	SW846 8081A
alpha-Chlordane	ND	0.050	ug/L	SW846 8081A
gamma-Chlordane	ND	0.050	ug/L	SW846 8081A
Toxaphene	ND	2.0	ug/L	SW846 8081A

SURROGATE	PERCENT RECOVERY	RECOVERY LIMITS
Tetrachloro-m-xylene	90	(39 - 130)
Decachlorobiphenyl	96	(10 - 147)

NOTE(S):

Calculations are performed before rounding to avoid round-off errors in calculated results.

LABORATORY CONTROL SAMPLE DATA REPORT

GC Semivolatiles

Client Lot #...: H0H020124 **Work Order #...:** DHCJ5102-LCS **Matrix.....:** WATER
LCS Lot-Sample#: C0H030000-507 DHCJ5103-LCSD
Prep Date.....: 08/03/00 **Analysis Date..:** 08/05/00
Prep Batch #...: 0216507
Dilution Factor: 1

PARAMETER	SPIKE AMOUNT	MEASURED AMOUNT	UNITS	PERCENT RECOVERY	RPD	METHOD
gamma-BHC (Lindane)	**0.250**	**0.246**	**ug/L**	**98**		**SW846 8081A**
	0.250	**0.222**	**ug/L**	**89**	**10**	**SW846 8081A**
Heptachlor	**0.250**	**0.250**	**ug/L**	**100**		**SW846 8081A**
	0.250	**0.229**	**ug/L**	**91**	**8.8**	**SW846 8081A**
Aldrin	**0.250**	**0.241**	**ug/L**	**96**		**SW846 8081A**
	0.250	**0.220**	**ug/L**	**88**	**9.2**	**SW846 8081A**
Dieldrin	**0.500**	**0.529**	**ug/L**	**106**		**SW846 8081A**
	0.500	**0.479**	**ug/L**	**96**	**9.9**	**SW846 8081A**
Endrin	**0.500**	**0.441**	**ug/L**	**88**		**SW846 8081A**
	0.500	**0.405**	**ug/L**	**81**	**8.4**	**SW846 8081A**
4,4'-DDT	**0.500**	**0.492**	**ug/L**	**98**		**SW846 8081A**
	0.500	**0.445**	**ug/L**	**89**	**10**	**SW846 8081A**

SURROGATE	PERCENT RECOVERY	RECOVERY LIMITS
Tetrachloro-m-xylene	96	(39 - 130)
	88	(39 - 130)
Decachlorobiphenyl	105	(10 - 147)
	96	(10 - 147)

NOTE(S):

Calculations are performed before rounding to avoid round-off errors in calculated results.

Bold print denotes control parameters

LABORATORY CONTROL SAMPLE EVALUATION REPORT

GC Semivolatiles

Client Lot #...: H0H020124 **Work Order #...:** DHCJ5102-LCS **Matrix.....:** WATER
LCS Lot-Sample#: C0H030000-507 DHCJ5103-LCSD
Prep Date.....: 08/03/00 **Analysis Date..:** 08/05/00
Prep Batch #...: 0216507
Dilution Factor: 1

PARAMETER	PERCENT RECOVERY	RECOVERY LIMITS	RPD	RPD LIMITS	METHOD
gamma-BHC (Lindane)	**98**	**(49 - 137)**			**SW846 8081A**
	89	**(49 - 137)**	**10**	**(0-22)**	**SW846 8081A**
Heptachlor	**100**	**(57 - 124)**			**SW846 8081A**
	91	**(57 - 124)**	**8.8**	**(0-32)**	**SW846 8081A**
Aldrin	**96**	**(62 - 120)**			**SW846 8081A**
	88	**(62 - 120)**	**9.2**	**(0-33)**	**SW846 8081A**
Dieldrin	**106**	**(68 - 130)**			**SW846 8081A**
	96	**(68 - 130)**	**9.9**	**(0-37)**	**SW846 8081A**
Endrin	**88**	**(46 - 137)**			**SW846 8081A**
	81	**(46 - 137)**	**8.4**	**(0-40)**	**SW846 8081A**
4,4'-DDT	**98**	**(60 - 140)**			**SW846 8081A**
	89	**(60 - 140)**	**10**	**(0-50)**	**SW846 8081A**

SURROGATE	PERCENT RECOVERY	RECOVERY LIMITS
Tetrachloro-m-xylene	96	(39 - 130)
	88	(39 - 130)
Decachlorobiphenyl	105	(10 - 147)
	96	(10 - 147)

NOTE(S):

Calculations are performed before rounding to avoid round-off errors in calculated results.

Bold print denotes control parameters

IT CORP - FT. MCCLELLAN

Client Sample ID: LK8002

GC Semivolatiles

Lot-Sample #...: H0H020124-002 **Work Order #...:** DH6V9107 **Matrix.....:** WATER
Date Sampled...: 08/01/00 **Date Received..:** 08/02/00
Prep Date.....: 08/03/00 **Analysis Date..:** 08/04/00
Prep Batch #...: 0216508
Dilution Factor: 1 **Method.....:** SW846 8082

PARAMETER	RESULT	REPORTING LIMIT	UNITS
Aroclor 1016	ND	1.0	ug/L
Aroclor 1221	ND	1.0	ug/L
Aroclor 1232	ND	1.0	ug/L
Aroclor 1242	ND	1.0	ug/L
Aroclor 1248	ND	1.0	ug/L
Aroclor 1254	ND	1.0	ug/L
Aroclor 1260	ND	1.0	ug/L

SURROGATE	PERCENT RECOVERY	RECOVERY LIMITS
Tetrachloro-m-xylene	55	(45 - 120)
Decachlorobiphenyl	84	(24 - 128)

METHOD BLANK REPORT

GC Semivolatiles

Client Lot #...: H0H020124 **Work Order #...:** DHCJD101 **Matrix.....:** WATER
MB Lot-Sample #: C0H030000-508

Prep Date.....: 08/03/00
Analysis Date..: 08/04/00 **Prep Batch #...:** 0216508
Dilution Factor: 1

PARAMETER	RESULT	REPORTING LIMIT	UNITS	METHOD
Aroclor 1016	ND	1.0	ug/L	SW846 8082
Aroclor 1221	ND	1.0	ug/L	SW846 8082
Aroclor 1232	ND	1.0	ug/L	SW846 8082
Aroclor 1242	ND	1.0	ug/L	SW846 8082
Aroclor 1248	ND	1.0	ug/L	SW846 8082
Aroclor 1254	ND	1.0	ug/L	SW846 8082
Aroclor 1260	ND	1.0	ug/L	SW846 8082

SURROGATE	PERCENT RECOVERY	RECOVERY LIMITS
Tetrachloro-m-xylene	78	(45 - 120)
Decachlorobiphenyl	89	(24 - 128)

NOTE(S):

Calculations are performed before rounding to avoid round-off errors in calculated results.

LABORATORY CONTROL SAMPLE DATA REPORT

GC Semivolatiles

Client Lot #...: H0H020124 **Work Order #...:** DHCJD102-LCS **Matrix.....:** WATER
LCS Lot-Sample#: C0H030000-508 DHCJD103-LCSD
Prep Date.....: 08/03/00 **Analysis Date..:** 08/04/00
Prep Batch #...: 0216508
Dilution Factor: 1

PARAMETER	SPIKE AMOUNT	MEASURED AMOUNT	UNITS	PERCENT RECOVERY	RPD	METHOD
Aroclor 1016	**10.0**	**7.64**	**ug/L**	**76**		**SW846 8082**
	10.0	**7.91**	**ug/L**	**79**	**3.5**	**SW846 8082**
Aroclor 1260	**10.0**	**8.09**	**ug/L**	**81**		**SW846 8082**
	10.0	**8.13**	**ug/L**	**81**	**0.51**	**SW846 8082**

SURROGATE	PERCENT RECOVERY	RECOVERY LIMITS
Tetrachloro-m-xylene	77	(45 - 120)
	79	(45 - 120)
Decachlorobiphenyl	90	(24 - 128)
	88	(24 - 128)

NOTE(S):

Calculations are performed before rounding to avoid round-off errors in calculated results.

Bold print denotes control parameters

LABORATORY CONTROL SAMPLE EVALUATION REPORT

GC Semivolatiles

Client Lot #...: H0H020124 **Work Order #...:** DHCJD102-LCS **Matrix.....:** WATER
LCS Lot-Sample#: C0H030000-508 DHCJD103-LCSD
Prep Date.....: 08/03/00 **Analysis Date..:** 08/04/00
Prep Batch #...: 0216508
Dilution Factor: 1

PARAMETER	PERCENT RECOVERY	RECOVERY LIMITS	RPD	RPD LIMITS	METHOD
Aroclor 1016	**76**	**(61 - 118)**			**SW846 8082**
	79	**(61 - 118)**	**3.5**	**(0-20)**	**SW846 8082**
Aroclor 1260	**81**	**(61 - 124)**			**SW846 8082**
	81	**(61 - 124)**	**0.51**	**(0-27)**	**SW846 8082**

SURROGATE	PERCENT RECOVERY	RECOVERY LIMITS
Tetrachloro-m-xylene	77	(45 - 120)
	79	(45 - 120)
Decachlorobiphenyl	90	(24 - 128)
	88	(24 - 128)

NOTE(S):

Calculations are performed before rounding to avoid round-off errors in calculated results.

Bold print denotes control parameters

IT CORP - FT. MCCLELLAN

Client Sample ID: LK8002

GC Semivolatiles

Lot-Sample #...: H0H020124-002 **Work Order #...:** DH6V9110 **Matrix.....:** WATER
Date Sampled...: 08/01/00 **Date Received..:** 08/02/00
Prep Date.....: 08/03/00 **Analysis Date..:** 08/07/00
Prep Batch #...: 0216509
Dilution Factor: 1 **Method.....:** SW846 8151A

PARAMETER	RESULT	REPORTING LIMIT	UNITS
2,4-D	ND	4.0	ug/L
Dalapon	ND	2.0	ug/L
2,4-DB	**4.5 P**	**4.0**	**ug/L**
Dicamba	ND	2.0	ug/L
Dichlorprop	ND	4.0	ug/L
Dinoseb	ND	0.60	ug/L
MCPA	ND	400	ug/L
MCPP	ND	400	ug/L
Pentachlorophenol	ND	1.0	ug/L
2,4,5-TP (Silvex)	ND	1.0	ug/L
2,4,5-T	ND	1.0	ug/L

SURROGATE	PERCENT RECOVERY	RECOVERY LIMITS
DCAA	94	(53 - 119)

NOTE(S):

P The percent difference between the original and confirmation analyses is greater than 25%.

METHOD BLANK REPORT

GC Semivolatiles

Client Lot #...: H0H020124 **Work Order #...:** DHCJK101 **Matrix.....:** WATER
MB Lot-Sample #: C0H030000-509

Prep Date.....: 08/03/00
Analysis Date..: 08/07/00 **Prep Batch #...:** 0216509
Dilution Factor: 1

PARAMETER	RESULT	REPORTING LIMIT	UNITS	METHOD
2,4-D	ND	4.0	ug/L	SW846 8151A
Dalapon	ND	2.0	ug/L	SW846 8151A
2,4-DB	ND	4.0	ug/L	SW846 8151A
Dicamba	ND	2.0	ug/L	SW846 8151A
Dichlorprop	ND	4.0	ug/L	SW846 8151A
Dinoseb	ND	0.60	ug/L	SW846 8151A
MCPA	ND	400	ug/L	SW846 8151A
MCPP	ND	400	ug/L	SW846 8151A
Pentachlorophenol	ND	1.0	ug/L	SW846 8151A
2,4,5-TP (Silvex)	ND	1.0	ug/L	SW846 8151A
2,4,5-T	ND	1.0	ug/L	SW846 8151A

SURROGATE	PERCENT RECOVERY	RECOVERY LIMITS
DCAA	65	(53 - 119)

NOTE(S):

Calculations are performed before rounding to avoid round-off errors in calculated results.

LABORATORY CONTROL SAMPLE DATA REPORT

GC Semivolatiles

Client Lot #...: H0H020124 **Work Order #...:** DHCJK102-LCS **Matrix.....:** WATER
LCS Lot-Sample#: C0H030000-509 DHCJK103-LCSD
Prep Date.....: 08/03/00 **Analysis Date..:** 08/07/00
Prep Batch #...: 0216509
Dilution Factor: 1

PARAMETER	SPIKE AMOUNT	MEASURED AMOUNT	UNITS	PERCENT RECOVERY	RPD	METHOD
2,4-D	**16.0**	**15.6**	**ug/L**	**97**		**SW846 8151A**
	16.0	**15.6**	**ug/L**	**98**	**0.32**	**SW846 8151A**
2,4,5-TP (Silvex)	**4.00**	**3.91**	**ug/L**	**98**		**SW846 8151A**
	4.00	**3.80**	**ug/L**	**95**	**2.7**	**SW846 8151A**
2,4,5-T	**4.00**	**4.18**	**ug/L**	**104**		**SW846 8151A**
	4.00	**4.15**	**ug/L**	**104**	**0.69**	**SW846 8151A**
Pentachlorophenol	**2.00**	**2.09**	**ug/L**	**105**		**SW846 8151A**
	2.00	**1.76**	**ug/L**	**88**	**18**	**SW846 8151A**

SURROGATE	PERCENT RECOVERY	RECOVERY LIMITS
DCAA	104	(53 - 119)
	102	(53 - 119)

NOTE(S):

Calculations are performed before rounding to avoid round-off errors in calculated results.

Bold print denotes control parameters

LABORATORY CONTROL SAMPLE EVALUATION REPORT

GC Semivolatiles

Client Lot #...: H0H020124 **Work Order #...:** DHCJK102-LCS **Matrix.....:** WATER
LCS Lot-Sample#: C0H030000-509 DHCJK103-LCSD
Prep Date.....: 08/03/00 **Analysis Date..:** 08/07/00
Prep Batch #...: 0216509
Dilution Factor: 1

PARAMETER	PERCENT RECOVERY	RECOVERY LIMITS	RPD	RPD LIMITS	METHOD
2,4-D	**97**	**(46 - 124)**			**SW846 8151A**
	98	**(46 - 124)**	**0.32**	**(0-20)**	**SW846 8151A**
2,4,5-TP (Silvex)	**98**	**(53 - 127)**			**SW846 8151A**
	95	**(53 - 127)**	**2.7**	**(0-20)**	**SW846 8151A**
2,4,5-T	**104**	**(40 - 126)**			**SW846 8151A**
	104	**(40 - 126)**	**0.69**	**(0-20)**	**SW846 8151A**
Pentachlorophenol	**105**	**(30 - 125)**			**SW846 8151A**
	88	**(30 - 125)**	**18**	**(0-30)**	**SW846 8151A**

SURROGATE	PERCENT RECOVERY	RECOVERY LIMITS
DCAA	104	(53 - 119)
	102	(53 - 119)

NOTE(S):

Calculations are performed before rounding to avoid round-off errors in calculated results.

Bold print denotes control parameters

IT CORP - FT. MCCLELLAN

Client Sample ID: LK8002

TOTAL Metals

Lot-Sample #...: H0H020124-002 **Matrix.....:** WATER
Date Sampled...: 08/01/00 **Date Received..:** 08/02/00

PARAMETER	RESULT	REPORTING LIMIT	UNITS	METHOD	PREPARATION-ANALYSIS DATE	WORK ORDER #
Prep Batch #...: 0217101						
Zinc	**5.1 B**	**20.0**	**ug/L**	**SW846 6010B**	**08/04-08/07/00**	**DH6V910W**
		Dilution Factor: 1				
Silver	ND	5.0	ug/L	SW846 6010B	08/04-08/07/00	DH6V9109
		Dilution Factor: 1				
Aluminum	**62.6 B**	**200**	**ug/L**	**SW846 6010B**	**08/04-08/07/00**	**DH6V910A**
		Dilution Factor: 1				
Arsenic	**11.5**	**10.0**	**ug/L**	**SW846 6010B**	**08/04-08/07/00**	**DH6V910C**
		Dilution Factor: 1				
Barium	**49.4 B**	**200**	**ug/L**	**SW846 6010B**	**08/04-08/07/00**	**DH6V910D**
		Dilution Factor: 1				
Beryllium	ND	5.0	ug/L	SW846 6010B	08/04-08/07/00	DH6V910E
		Dilution Factor: 1				
Calcium	**11400**	**5000**	**ug/L**	**SW846 6010B**	**08/04-08/07/00**	**DH6V910F**
		Dilution Factor: 1				
Cadmium	ND	5.0	ug/L	SW846 6010B	08/04-08/07/00	DH6V910G
		Dilution Factor: 1				
Cobalt	ND	50.0	ug/L	SW846 6010B	08/04-08/07/00	DH6V910H
		Dilution Factor: 1				
Chromium	ND	5.0	ug/L	SW846 6010B	08/04-08/07/00	DH6V910J
		Dilution Factor: 1				
Copper	ND	25.0	ug/L	SW846 6010B	08/04-08/07/00	DH6V910K
		Dilution Factor: 1				
Iron	**3510**	**100**	**ug/L**	**SW846 6010B**	**08/04-08/07/00**	**DH6V910L**
		Dilution Factor: 1				
Potassium	**1840 B**	**5000**	**ug/L**	**SW846 6010B**	**08/04-08/07/00**	**DH6V912H**
		Dilution Factor: 1				
Magnesium	**7510**	**5000**	**ug/L**	**SW846 6010B**	**08/04-08/07/00**	**DH6V910M**
		Dilution Factor: 1				

(Continued on next page)

IT CORP - FT. MCCLELLAN

Client Sample ID: LK8002

TOTAL Metals

Lot-Sample #...: H0H020124-002 Matrix.....: WATER

PARAMETER	RESULT	REPORTING LIMIT	UNITS	METHOD	PREPARATION-ANALYSIS DATE	WORK ORDER #
Manganese	**109**	**15.0**	**ug/L**	**SW846 6010B**	**08/04-08/07/00**	**DH6V910N**
		Dilution Factor: 1				
Sodium	**3990 B**	**5000**	**ug/L**	**SW846 6010B**	**08/04-08/07/00**	**DH6V912J**
		Dilution Factor: 1				
Nickel	ND	40.0	ug/L	SW846 6010B	08/04-08/07/00	DH6V910P
		Dilution Factor: 1				
Lead	**8.2**	**3.0**	**ug/L**	**SW846 6010B**	**08/04-08/07/00**	**DH6V910Q**
		Dilution Factor: 1				
Antimony	ND	10.0	ug/L	SW846 6010B	08/04-08/07/00	DH6V910R
		Dilution Factor: 1				
Selenium	ND	5.0	ug/L	SW846 6010B	08/04-08/07/00	DH6V910T
		Dilution Factor: 1				
Thallium	ND	10.0	ug/L	SW846 6010B	08/04-08/07/00	DH6V910U
		Dilution Factor: 1				
Vanadium	**3.3 B**	**50.0**	**ug/L**	**SW846 6010B**	**08/04-08/07/00**	**DH6V910V**
		Dilution Factor: 1				
Prep Batch #...: 0217370						
Mercury	ND	0.20	ug/L	SW846 7470A	08/05/00	DH6V910X
		Dilution Factor: 1				

NOTE(S):

B Estimated result. Result is less than RL.

METHOD BLANK REPORT

TOTAL Metals

Client Lot #...: H0H020124 **Matrix.....:** WATER

PARAMETER	RESULT	REPORTING LIMIT	UNITS	METHOD	PREPARATION-ANALYSIS DATE	WORK ORDER #
MB Lot-Sample #: C0H040000-101 **Prep Batch #...:** 0217101						
Aluminum	ND	200	ug/L	SW846 6010B	08/04-08/07/00	DHCPA101
		Dilution Factor: 1				
Antimony	ND	10.0	ug/L	SW846 6010B	08/04-08/07/00	DHCPA10G
		Dilution Factor: 1				
Arsenic	ND	10.0	ug/L	SW846 6010B	08/04-08/07/00	DHCPA102
		Dilution Factor: 1				
Barium	ND	200	ug/L	SW846 6010B	08/04-08/07/00	DHCPA103
		Dilution Factor: 1				
Beryllium	ND	5.0	ug/L	SW846 6010B	08/04-08/07/00	DHCPA104
		Dilution Factor: 1				
Cadmium	ND	5.0	ug/L	SW846 6010B	08/04-08/07/00	DHCPA106
		Dilution Factor: 1				
Calcium	ND	5000	ug/L	SW846 6010B	08/04-08/07/00	DHCPA105
		Dilution Factor: 1				
Chromium	ND	5.0	ug/L	SW846 6010B	08/04-08/07/00	DHCPA108
		Dilution Factor: 1				
Cobalt	ND	50.0	ug/L	SW846 6010B	08/04-08/07/00	DHCPA107
		Dilution Factor: 1				
Copper	ND	25.0	ug/L	SW846 6010B	08/04-08/07/00	DHCPA10S
		Dilution Factor: 1				
Iron	ND	100	ug/L	SW846 6010B	08/04-08/07/00	DHCPA10A
		Dilution Factor: 1				
Lead	ND	3.0	ug/L	SW846 6010B	08/04-08/07/00	DHCPA10F
		Dilution Factor: 1				
Magnesium	ND	5000	ug/L	SW846 6010B	08/04-08/07/00	DHCPA10C
		Dilution Factor: 1				
Manganese	ND	15.0	ug/L	SW846 6010B	08/04-08/07/00	DHCPA10D
		Dilution Factor: 1				
Nickel	ND	40.0	ug/L	SW846 6010B	08/04-08/07/00	DHCPA10E
		Dilution Factor: 1				

(Continued on next page)

METHOD BLANK REPORT

TOTAL Metals

Client Lot #...: H0H020124 **Matrix.....:** WATER

PARAMETER	RESULT	REPORTING LIMIT	UNITS	METHOD	PREPARATION-ANALYSIS DATE	WORK ORDER #
Potassium	ND	5000	ug/L	SW846 6010B	08/04-08/07/00	DHCPA11E
		Dilution Factor: 1				
Selenium	ND	5.0	ug/L	SW846 6010B	08/04-08/07/00	DHCPA10H
		Dilution Factor: 1				
Silver	ND	5.0	ug/L	SW846 6010B	08/04-08/07/00	DHCPA10M
		Dilution Factor: 1				
Sodium	**140 B**	**5000**	**ug/L**	**SW846 6010B**	**08/04-08/07/00**	**DHCPA11F**
		Dilution Factor: 1				
Thallium	ND	10.0	ug/L	SW846 6010B	08/04-08/07/00	DHCPA10J
		Dilution Factor: 1				
Vanadium	ND	50.0	ug/L	SW846 6010B	08/04-08/07/00	DHCPA10K
		Dilution Factor: 1				
Zinc	ND	20.0	ug/L	SW846 6010B	08/04-08/07/00	DHCPA10L
		Dilution Factor: 1				

MB Lot-Sample #: C0H040000-370 **Prep Batch #...:** 0217370

Mercury	ND	0.20	ug/L	SW846 7470A	08/05/00	DHDM8101
		Dilution Factor: 1				

NOTE(S):

Calculations are performed before rounding to avoid round-off errors in calculated results.

B Estimated result. Result is less than RL.

LABORATORY CONTROL SAMPLE DATA REPORT

TOTAL Metals

Client Lot #...: H0H020124 **Matrix.....:** WATER

LCS Lot-Sample#: C0H040000-101 **Prep Batch #...:** 0217101

PARAMETER	SPIKE AMOUNT	MEASURED AMOUNT	UNITS	PERCNT RECVRY	METHOD	PREPARATION-ANALYSIS DATE	WORK ORDER #
Aluminum	2000	1930	ug/L	97	SW846 6010B	08/04-08/07/00	DHCPA10N
			Dilution Factor: 1				
Arsenic	2000	1970	ug/L	98	SW846 6010B	08/04-08/07/00	DHCPA10P
			Dilution Factor: 1				
Barium	2000	1890	ug/L	94	SW846 6010B	08/04-08/07/00	DHCPA10Q
			Dilution Factor: 1				
Beryllium	50.0	48.7	ug/L	97	SW846 6010B	08/04-08/07/00	DHCPA10R
			Dilution Factor: 1				
Calcium	50000	50600	ug/L	101	SW846 6010B	08/04-08/07/00	DHCPA10T
			Dilution Factor: 1				
Cadmium	50.0	47.3	ug/L	95	SW846 6010B	08/04-08/07/00	DHCPA10U
			Dilution Factor: 1				
Cobalt	500	474	ug/L	95	SW846 6010B	08/04-08/07/00	DHCPA10V
			Dilution Factor: 1				
Chromium	200	202	ug/L	101	SW846 6010B	08/04-08/07/00	DHCPA10W
			Dilution Factor: 1				
Copper	250	235	ug/L	94	SW846 6010B	08/04-08/07/00	DHCPA10X
			Dilution Factor: 1				
Silver	50.0	50.0	ug/L	100	SW846 6010B	08/04-08/07/00	DHCPA11A
			Dilution Factor: 1				
Potassium	50000	47100	ug/L	94	SW846 6010B	08/04-08/07/00	DHCPA11C
			Dilution Factor: 1				
Sodium	50000	47700	ug/L	95	SW846 6010B	08/04-08/07/00	DHCPA11D
			Dilution Factor: 1				
Iron	1000	1010	ug/L	101	SW846 6010B	08/04-08/07/00	DHCPA110
			Dilution Factor: 1				
Magnesium	50000	49000	ug/L	98	SW846 6010B	08/04-08/07/00	DHCPA111
			Dilution Factor: 1				

(Continued on next page)

LABORATORY CONTROL SAMPLE DATA REPORT

TOTAL Metals

Client Lot #...: H0H020124 **Matrix.....:** WATER

PARAMETER	SPIKE AMOUNT	MEASURED AMOUNT	UNITS	PERCNT RECVRY	METHOD	PREPARATION-ANALYSIS DATE	WORK ORDER #
Manganese	500	474	ug/L	95	SW846 6010B	08/04-08/07/00	DHCPA112
			Dilution Factor: 1				
Nickel	500	495	ug/L	99	SW846 6010B	08/04-08/07/00	DHCPA113
			Dilution Factor: 1				
Lead	500	495	ug/L	99	SW846 6010B	08/04-08/07/00	DHCPA114
			Dilution Factor: 1				
Antimony	500	495	ug/L	99	SW846 6010B	08/04-08/07/00	DHCPA115
			Dilution Factor: 1				
Selenium	2000	1990	ug/L	99	SW846 6010B	08/04-08/07/00	DHCPA116
			Dilution Factor: 1				
Thallium	2000	2060	ug/L	103	SW846 6010B	08/04-08/07/00	DHCPA117
			Dilution Factor: 1				
Vanadium	500	473	ug/L	95	SW846 6010B	08/04-08/07/00	DHCPA118
			Dilution Factor: 1				
Zinc	500	466	ug/L	93	SW846 6010B	08/04-08/07/00	DHCPA119
			Dilution Factor: 1				

LCS Lot-Sample#: C0H040000-370 **Prep Batch #...:** 0217370

Mercury	2.50	2.60	ug/L	104	SW846 7470A	08/05/00	DHDM8102
			Dilution Factor: 1				

NOTE(S):

Calculations are performed before rounding to avoid round-off errors in calculated results.

LABORATORY CONTROL SAMPLE EVALUATION REPORT

TOTAL Metals

Client Lot #...: H0H020124 **Matrix.....:** WATER

PARAMETER	PERCENT RECOVERY	RECOVERY LIMITS	METHOD	PREPARATION-ANALYSIS DATE	WORK ORDER #
LCS Lot-Sample#: C0H040000-101 **Prep Batch #...:** 0217101					
Aluminum	97	(80 - 120)	SW846 6010B Dilution Factor: 1	08/04-08/07/00	DHCPA10N
Arsenic	98	(80 - 120)	SW846 6010B Dilution Factor: 1	08/04-08/07/00	DHCPA10P
Barium	94	(80 - 120)	SW846 6010B Dilution Factor: 1	08/04-08/07/00	DHCPA10Q
Beryllium	97	(80 - 120)	SW846 6010B Dilution Factor: 1	08/04-08/07/00	DHCPA10R
Calcium	101	(80 - 120)	SW846 6010B Dilution Factor: 1	08/04-08/07/00	DHCPA10T
Cadmium	95	(80 - 120)	SW846 6010B Dilution Factor: 1	08/04-08/07/00	DHCPA10U
Cobalt	95	(80 - 120)	SW846 6010B Dilution Factor: 1	08/04-08/07/00	DHCPA10V
Chromium	101	(80 - 120)	SW846 6010B Dilution Factor: 1	08/04-08/07/00	DHCPA10W
Copper	94	(80 - 120)	SW846 6010B Dilution Factor: 1	08/04-08/07/00	DHCPA10X
Silver	100	(80 - 120)	SW846 6010B Dilution Factor: 1	08/04-08/07/00	DHCPA11A
Potassium	94	(80 - 120)	SW846 6010B Dilution Factor: 1	08/04-08/07/00	DHCPA11C
Sodium	95	(80 - 120)	SW846 6010B Dilution Factor: 1	08/04-08/07/00	DHCPA11D
Iron	101	(80 - 120)	SW846 6010B Dilution Factor: 1	08/04-08/07/00	DHCPA110
Magnesium	98	(80 - 120)	SW846 6010B Dilution Factor: 1	08/04-08/07/00	DHCPA111

(Continued on next page)

LABORATORY CONTROL SAMPLE EVALUATION REPORT

TOTAL Metals

Client Lot #...: H0H020124 **Matrix.....:** WATER

PARAMETER	PERCENT RECOVERY	RECOVERY LIMITS	METHOD	PREPARATION-ANALYSIS DATE	WORK ORDER #
Manganese	95	(80 - 120)	SW846 6010B	08/04-08/07/00	DHCPA112
		Dilution Factor: 1			
Nickel	99	(80 - 120)	SW846 6010B	08/04-08/07/00	DHCPA113
		Dilution Factor: 1			
Lead	99	(80 - 120)	SW846 6010B	08/04-08/07/00	DHCPA114
		Dilution Factor: 1			
Antimony	99	(80 - 120)	SW846 6010B	08/04-08/07/00	DHCPA115
		Dilution Factor: 1			
Selenium	99	(80 - 120)	SW846 6010B	08/04-08/07/00	DHCPA116
		Dilution Factor: 1			
Thallium	103	(80 - 120)	SW846 6010B	08/04-08/07/00	DHCPA117
		Dilution Factor: 1			
Vanadium	95	(80 - 120)	SW846 6010B	08/04-08/07/00	DHCPA118
		Dilution Factor: 1			
Zinc	93	(80 - 120)	SW846 6010B	08/04-08/07/00	DHCPA119
		Dilution Factor: 1			

LCS Lot-Sample#: C0H040000-370 **Prep Batch #...:** 0217370

Mercury	104	(80 - 120)	SW846 7470A	08/05/00	DHDM8102
		Dilution Factor: 1			

NOTE(S):

Calculations are performed before rounding to avoid round-off errors in calculated results.

IT CORP - FT. MCCLELLAN

Client Sample ID: LK8002

General Chemistry

Lot-Sample #...: H0H020124-002 **Work Order #...:** DH6V9 **Matrix.....:** WATER
Date Sampled...: 08/01/00 **Date Received..:** 08/02/00

PARAMETER	RESULT	RL	UNITS	METHOD	PREPARATION-ANALYSIS DATE	PREP BATCH #
Corrosivity	**7.5**		**No Units**	**SW846 9045A**	**08/03/00**	**0216426**
	Dilution Factor: 1					
Flashpoint	**>180**		**deg F**	**SW846 1010**	**08/03/00**	**0216345**
	Dilution Factor: 1					
Reactive Cyanide	ND	200	mg/kg	SW846 7.3.3	08/03/00	0216356
	Dilution Factor: 1					
Reactive Sulfide	ND	200	mg/kg	SW846 7.3.4	08/03/00	0216351
	Dilution Factor: 1					

METHOD BLANK REPORT

General Chemistry

Client Lot #...: H0H020124 **Matrix.....:** WATER

PARAMETER	RESULT	REPORTING LIMIT	UNITS	METHOD	PREPARATION-ANALYSIS DATE	PREP BATCH #
Reactive Cyanide		Work Order #: DH9TQ101		MB Lot-Sample #:	A0H030000-356	
	ND	200	mg/kg	SW846 7.3.3	08/03/00	0216356
		Dilution Factor: 1				
Reactive Sulfide		Work Order #: DH9RV101		MB Lot-Sample #:	A0H030000-351	
	ND	200	mg/kg	SW846 7.3.4	08/03/00	0216351
		Dilution Factor: 1				

NOTE(S):

Calculations are performed before rounding to avoid round-off errors in calculated results.

H0H020124

IT CORPORATION
A Member of The IT Group

ANALYSIS REQUEST AND CHAIN OF CUSTODY RECORD

Reference Document No: 137-080100-QSK

Project Number: 800486
Project Name: Fort McClellan
Sample Coordinator: Oliver Allen
Turnaround Time:

Samples Shipment Date: 01 AUG 2000
Lab Destination: Quanterra Environmental Services - Knoxville
Lab Contact: John Reynolds
Project Contact: Randy McBride
Carrier/Waybill No.: Fed Ex/792627293554

Bill To: Duane Nielsen
312 Directors Drive
Knoxville TN 37923

Report To: Duane Nielsen
312 Directors Drive
Knoxville TN 37923

Special Instructions: 48 Hour Turnaround

Possible Hazard Indentification:
Non-hazard ☐ Flammable ☐ Skin Irritant ☐ Poison B ☐ Unknown ☑

Sample Disposal:
Return to Client ☐ Disposal by Lab ☑ Archive (mos.)

1. Relinquished By (Signature/Affiliation) D.K. Allen	Date: 8-1-00 Time: 1400	1. Received By (Signature/Affiliation) Matthew F. Howard	Date: 8/2/00 Time: 0910c
2. Relinquished By (Signature/Affiliation)	Date: Time:	2. Received By (Signature/Affiliation)	Date: Time:
3. Relinquished By (Signature/Affiliation)	Date: Time:	3. Received By (Signature/Affiliation)	Date: Time:

Comments: None

Rec'd Temp. MF# 8-2-00 ≈ 3°C
Custody Seals Intact
MF#- 8-2-00

Sample No	Sample Name	Sample Date	Sample Time	Container	Ctr Qty	Preservative	Requested Testing Program	Fil	CID	Condition On Receipt
080100-TB	FIELDQC-BW-080100-TB-TB	01 AUG 2000	08:00	40 ml VOA VIAL	2	HCl<pH 2	Volatiles by 8260B	N		
LK8002	UST-137A1-WS01-WA-LK8002-REG	01 AUG 2000	10:30	40 ml VOA VIAL	3	HCl<pH 2	Volatiles by 8260B	N		
LK8002	UST-137A1-WS01-WA-LK8002-REG	01 AUG 2000	10:30	1 L Amb. Glass	12	None except cool to 4 C	Semivolatiles by 8270C	N		
LK8002	UST-137A1-WS01-WA-LK8002-REG	01 AUG 2000	10:30	1 L HDPE	1	HNO3<pH 2	TAL Metals by 6010B/7470A - Water	N		pH<2
LK8002	UST-137A1-WS01-WA-LK8002-REG	01 AUG 2000	10:30	1 L Amb. Glass	12	None except cool to 4 C	PCBs by 8082	N		
LK8002	UST-137A1-WS01-WA-LK8002-REG	01 AUG 2000	10:30	1 L Amb. Glass	12	None except cool to 4 C	Cl Pesticides by 8081A	N		
LK8002	UST-137A1-WS01-WA-LK8002-REG	01 AUG 2000	10:30	1 L Amb. Glass	12	None except cool to 4 C	Cl Herbicides by 8151A	N		
LK8002	UST-137A1-WS01-WA-LK8002-REG	01 AUG 2000	10:30	1 L HDPE	1	None except cool to 4 C	Reactive CN by 9030 - Reactive Sulfide	N		

MUMU20129

IT CORPORATION

A Member of The IT Group

ANALYSIS REQUEST AND CHAIN OF CUSTODY RECORD

Reference Document No: 137-080100-QSK

Sample No	Sample Name	Sample Date	Sample Time	Container		Preservative	Requested Testing Program	Fil	CID	Condition On Receipt
							by 9010			
LK8002	UST-137A1-WS01-WA-LK8002-REG	01 AUG 2000	10:30	500 mL HDPE	1	None except cool to 4 C	Corrosivity by 1110	N		
LK8002	UST-137A1-WS01-WA-LK8002-REG	01 AUG 2000	10:30	500 mL HDPE	1	None except cool to 4 C	Ignitability by 1010	N		

Severn Trent Laboratories, Inc
SAMPLE ANALYSIS REQUISITION

ABORATORY: STL Pittsburgh
450 William Pitt Way
Pittsburgh PA 15238,DAM ER

NEED ANALYTICAL REPORT BY
8/06/00
ROUTINE

ATTN:

RUSH

B PURCHASE ORDER: SR025085

CLIENT CODE: 394097 PROJECT MANAGER: John D. Reynolds

NUMBER OF SAMPLES IN LOT: 0000

SAMPLE I.D.	SAMPLING DATE	ANALYSIS REQUIRED
H0H020124-002 DH6V9-1-05	8/01/00	Base/Neutrals and Acids (8270C) (MS8270_L) METHOD: 8270C
H0H020124-002 DH6V9-1-06	8/01/00	Pesticides (8081A) (GC8081_L) METHOD: 8081A
H0H020124-002 DH6V9-1-07	8/01/00	PCBs (8082) (GC8082_A) METHOD: 8082
H0H020124-002 DH6V9-1-09	8/01/00	Inductively Coupled Plasma (6010B Trace) (MT6010_L) METHOD: 6010B
H0H020124-002 DH6V9-1-0A	8/01/00	Inductively Coupled Plasma (6010B Trace) (MT6010_L) METHOD: 6010B
H0H020124-002 DH6V9-1-0C	8/01/00	Inductively Coupled Plasma (6010B Trace) (MT6010_L) METHOD: 6010B
H0H020124-002 DH6V9-1-0D	8/01/00	Inductively Coupled Plasma (6010B Trace) (MT6010_L) METHOD: 6010B
H0H020124-002 DH6V9-1-0E	8/01/00	Inductively Coupled Plasma (6010B Trace) (MT6010_L) METHOD: 6010B
H0H020124-002 DH6V9-1-0F	8/01/00	Inductively Coupled Plasma (6010B Trace) (MT6010_L) METHOD: 6010B
H0H020124-002 DH6V9-1-0G	8/01/00	Inductively Coupled Plasma (6010B Trace) (MT6010_L) METHOD: 6010B

****
* CONTINUED *
****

Severn Trent Laboratories, Inc
SAMPLE ANALYSIS REQUISITION

ABORATORY: STL Pittsburgh
450 William Pitt Way
Pittsburgh PA 15238,DAM ER

NEED ANALYTICAL REPORT BY
8/06/00
ROUTINE

ATTN:

AB PURCHASE ORDER: SR025085

CLIENT CODE: 394097 PROJECT MANAGER: John D. Reynolds

NUMBER OF SAMPLES IN LOT: 0000

SAMPLE I.D.	SAMPLING DATE	ANALYSIS REQUIRED
H0H020124-002 DH6V9-1-0H	8/01/00	Inductively Coupled Plasma (6010B Trace) (MT6010_L) METHOD: 6010B
H0H020124-002 DH6V9-1-0J	8/01/00	Inductively Coupled Plasma (6010B Trace) (MT6010_L) METHOD: 6010B
H0H020124-002 DH6V9-1-0K	8/01/00	Inductively Coupled Plasma (6010B Trace) (MT6010_L) METHOD: 6010B
H0H020124-002 DH6V9-1-0L	8/01/00	Inductively Coupled Plasma (6010B Trace) (MT6010_L) METHOD: 6010B
H0H020124-002 DH6V9-1-0M	8/01/00	Inductively Coupled Plasma (6010B Trace) (MT6010_L) METHOD: 6010B
H0H020124-002 DH6V9-1-0N	8/01/00	Inductively Coupled Plasma (6010B Trace) (MT6010_L) METHOD: 6010B
H0H020124-002 DH6V9-1-0P	8/01/00	Inductively Coupled Plasma (6010B Trace) (MT6010_L) METHOD: 6010B
H0H020124-002 DH6V9-1-0Q	8/01/00	Inductively Coupled Plasma (6010B Trace) (MT6010_L) METHOD: 6010B
H0H020124-002 DH6V9-1-0R	8/01/00	Inductively Coupled Plasma (6010B Trace) (MT6010_L) METHOD: 6010B
H0H020124-002 DH6V9-1-0T	8/01/00	Inductively Coupled Plasma (6010B Trace) (MT6010_L) METHOD: 6010B

****
* CONTINUED *
****

Severn Trent Laboratories, Inc
SAMPLE ANALYSIS REQUISITION

ABORATORY: STL Pittsburgh
450 William Pitt Way
Pittsburgh PA 15238,DAM ER

NEED ANALYTICAL REPORT BY
8/06/00
ROUTINE

ATTN:

.B PURCHASE ORDER: SR025085

CLIENT CODE: 394097 PROJECT MANAGER: John D. Reynolds

NUMBER OF SAMPLES IN LOT: 0000

SAMPLE I.D.	SAMPLING DATE	ANALYSIS REQUIRED
H0H020124-002 DH6V9-1-0U	8/01/00	Inductively Coupled Plasma (6010B Trace) (MT6010_L) METHOD: 6010B
H0H020124-002 DH6V9-1-0V	8/01/00	Inductively Coupled Plasma (6010B Trace) (MT6010_L) METHOD: 6010B
H0H020124-002 DH6V9-1-0W	8/01/00	Inductively Coupled Plasma (6010B Trace) (MT6010_L) METHOD: 6010B
H0H020124-002 DH6V9-1-0X	8/01/00	Mercury (7470A, Cold Vapor) - Liquid (M7470_L) METHOD: 7470A
H0H020124-002 DH6V9-1-10	8/01/00	Herbicides (8151A) (GC8151_L) METHOD: 8151A

AIRBORNE EXPRESS.

Ship. # 6055629-436 Svcs. EXP
Desc. H0H020124
Bill Ref. 140220

6055629 436

08/02/00 Wt. 66 LB 1 Pc
Dims
Bill To

2001 (10/98) W SENDER'S COPY
Zip/Postal Code 15238
Chg. $66.45

NEED DETECTION LIMIT AND ANALYSIS DATE INCLUDED IN REPORT.

SHIPPING METHOD: AIRBORNE DATE: 8/02/00

SEND REPORT TO: JOHN REYNOLDS

SAMPLE RECEIVED BY: _____ DATE: _____

PLEASE SEND A SIGNED COPY OF THIS FORM WITH REPORT AT COMPLETION OF ANALYSIS.

THANK YOU.

STL Knoxville
INT: _____ 8/02/00 9:01:04
STL Pittsburgh
450 William Pitt Way
Pittsburgh PA 15238,DAM ER

RELINQUISHED BY: Matthew J. Hunt DATE/TIME: 8/02/00, 9:00

RELINQUISHED BY: _____ DATE/TIME: _____

RECEIVED FOR LAB BY: _____ DATE/TIME: _____

PLEASE RETURN ORIGINAL SAMPLE ANALYSIS REQUISITION

Severn Trent Laboratories, Inc
SAMPLE ANALYSIS REQUISITION

LABORATORY: STL N Canton
4101 Shuffel Drive NW
North Canton OH 44720,DAM ER

NEED ANALYTICAL REPORT BY
8/06/00

RUSH

ATTN:

LAB PURCHASE ORDER: SR025084

CLIENT CODE: 394097 PROJECT MANAGER: John D. Reynolds

NUMBER OF SAMPLES IN LOT: 0000

SAMPLE I.D.	SAMPLING DATE	ANALYSIS REQUIRED
H0H020124-002 DH6V9-1-01	8/01/00	Flash Point (1010, Closed Cup) (FLASH_L) METHOD: 1010
H0H020124-002 DH6V9-1-02	8/01/00	Cyanide, Reactive (SW7.3.3) (CNREACT) METHOD: 7.3.3
H0H020124-002 DH6V9-1-03	8/01/00	Sulfide, Reactive (SW7.3.4) (SULREACT) METHOD: 7.3.4
H0H020124-002 DH6V9-1-04	8/01/00	Corrosivity (9045) (CORROS) METHOD: 9045A

NEED DETECTION LIMIT AND ANALYSIS DATE INCLUDED IN REPORT.

SHIPPING METHOD: AIRBORNE DATE: 8/02/00

SEND REPORT TO: JOHN REYNOLDS

SAMPLE RECEIVED BY: _____ DATE: _____

PLEASE SEND A SIGNED COPY OF THIS FORM WITH REPORT AT COMPLETION OF ANALYSIS.

THANK YOU.

STL Knoxville
INT: _____ 8/02/00 9:01:04
STL N Canton
4101 Shuffel Drive NW
North Canton OH 44720,DAM ER

RELINQUISHED BY: Matthew F. Howard DATE/TIME: 8/02/00, 09:00

RELINQUISHED BY: _____ DATE/TIME: _____

RECEIVED FOR LAB BY: _____ DATE/TIME: _____

PLEASE RETURN ORIGINAL SAMPLE ANALYSIS REQUISITION

AIRBORNE EXPRESS
Ship. # 6055628-633
Desc. H0H020124
Bill Ref. 140220
Svcs. EXP
6055628 633
08/02/00
Wt. 42 LB
Dims
Bill To
1 Pc
2001 (10/98) W SENDER'S COPY
Zip/Postal Code 44720
Chg. $46.55

STL KNOXVILLE

SAMPLE RECEIPT/CONDITION UPON RECEIPT ANOMALY CHECKLIST

CLIENT: IT CORP PROJECT: FT McCLELLAN Lot No.: 1H01H020124

TO BE COMPLETED BY SAMPLE RECEIPT ASSOCIATE:

1. Sample Receipt:	YES	NO	NA
a. Do sample container labels match COC? (IDs, Dates, Times)		✓	
b. Is the cooler temperature within acceptance limits?	✓		
c. Were samples received with correct preservative (excluding Encore)?	✓		
d. Were custody seals present/intact on cooler and/or containers?	✓		
e. Were all of the samples listed on the COC received?	✓		
f. Were all of the sample containers received intact?	✓		
g. Were containers received for VOAs received without headspace?	✓		
h. Were samples received in the appropriate containers?	✓		
i. Did you check for residual chlorine, if necessary?			✓
j. Were samples received within 1/2 of the (QAMP) holding time?	✓		
k. Were samples screened for radioactivity?			✓
l. Were client's sample documents (RFA/COC) received?	✓		
m. Has the RFA/COC been relinquished? (Signed, Dated, Timed)	✓		
n. Are test/parameters listed for each sample?	✓		
o. Is the matrix of the samples noted?	✓		
p. Is the date/time of sample collection noted?	✓		
q. Is the client and project name/No. identified?	✓		

SAMPLE RECEIVING ASSOCIATE: ~~272Sta~~ [illegible] DATE: 8-2-00

TO BE COMPLETED BY PROJECT MANAGER :

1. Project manager "Sample Greet":	YES	NO	NA
a. Quote number to be logged-in under 27256			
b. Informed Login associates of special instructions ? FAX 8-7-00 ASAP, 8-11-00	✓		
2. If custody seals were missing/not intact, was client notified?			✓

PROJECT MANAGER : [illegible] DATE: 8/2/00

Client Sample ID	Analysis Requested	Condition (see legend)	Comments/Action
LK8002	ALL	7B	NO TIME ON LABEL
↓	↓	3C	RECEIVED 2x1LG NOT ON COC

☐ Client informed on _____ by _____. Person contacted: _____.

☑ Noted actions in comments section above.

☐ No action necessary; process as is.

Project Manager: [illegible] Date: 8/2/00

STL KNOXVILLE

SAMPLE RECEIPT/CONDITION UPON RECEIPT ANOMALY CHECKLIST LEGEND

Item	Condition
Cooler:	1a Not received, COC available
	1b Leaking
	1c Other: _____
Temperature:	2a Temp Blank = _____
	2b Cooler Temp = _____
	(cooler temp should be used only if there is no temp blank)
Container:	3a Leaking
	3b Broken
	3c Extra
	3d No labels
	3e Headspace (VOA only)
	3f Other: _____
Samples:	4a Samples received but not on COC
	4b Samples not received but on COC
	4c Holding time expired
	4d Sample received with < ½ holding time remaining
	4e Sample preservative: _____
	4f Other: _____
Custody Seals:	5a None
	5b Not intact
	5c Other: _____
Chain of Custody (COC):	6a Not relinquished by client
	6b Incomplete information
	6c Other: _____
Container Labels:	7a Doesn't match COC
	7b Incomplete information
	7c Marking smeared
	7d Label torn
	7e Other: _____

Other (8): _____

STL KNOXVILLE

SAMPLE LOG-IN (LOT SUMMARY) REVIEW CHECKLIST

CLIENT: ITKnx PROJECT: FMC Lot No.: H0H020124

TO BE COMPETED BY PROJECT MANAGER:

	YES	NO	NA
1. Client Documents (Request for Analysis/Chain of Custody):			
a. Was QuanTIMS lot number documented on all paperwork?	✓		
b. Was RFA/COC signed upon receipt, including date/time?	✓		
c. Is preservative check (pH) noted on RFA/COC?	✓		
d. Is cooler temperature & custody seal condition noted on COC?	✓		
2. Log-in (Lot Folder) Review:			
a. Do client IDs on Client Summaries match RFA/COC?	✓		
b. Were tests/parameters assigned correctly?	✓		
c. Were correct analytical and report due dates assigned?	✓		
d. Has the correct fax due date been assigned to the lot?	✓		
e. Is the correct report format noted in the lot summary?	✓		
f. Is percent moisture logged for samples requiring this analysis?			✓
g. Are client assigned QC samples properly defined?			✓
3. Contract/Subcontract Review:			
a. Is there a contract number or PO for this work?	✓		
b If the purchase order number is given, is it noted in Lot header?	✓		
c. If samples were subcontracted, was copy of COC in folder?	✓		
4. SDG Review:			
a. If SDG is required, is SDG form in Lot folder?			✓
b Is SDG number noted in Lot header & sample comments?			✓
c. If SDG is complete, has the due date been revised & marked closed?			✓
5. Checklist Review:			
a. Has Sample Receipt Checklist been filled-out?	✓		
b. Was there a CUR?	✓		
c. Were all issues resolved?			✓

LOT FOLDER REVIEWED BY: [signature] DATE: 8/3/00