Sign Installation
Site-Specific Work Plan
Choccolocco Corridor Ranges
Fort McClellan, Calhoun County, Alabama

Prepared for:

U.S. Army Corps of Engineers, Mobile District
109 St. Joseph Street
Mobile, Alabama

Prepared by:

Shaw Environmental, Inc.
312 Directors Drive
Knoxville, Tennessee 37923

Task Order CK10
Contract No. DACA21-96-D-0018
Project No. 796887

May 2004

Sign Installation
Site-Specific Work Plan
Choccolocco Corridor Ranges
Fort McClellan, Calhoun County, Alabama

1.0 Introduction

As requested by the U.S. Army Corps of Engineers (USACE), Mobile District, the Army will install signage at the Choccolocco Corridor Ranges located at Fort McClellan (FTMC), Alabama. The USACE contracted Shaw Environmental, Inc. (Shaw) (formerly IT Corporation [IT]) to perform this work, under Contract Number DACA21-96-D-0018, Task Order CK10. The objective of the task is to install 116 metal signs along the perimeter of the Choccolocco Corridor Ranges to indicate that the area is restricted because of the presence of lead in surface soil. This work plan provides guidance for the installation of the signage at the Corridor Ranges.

This site-specific plan will be used in conjunction with the installation-wide sampling and analysis plan (SAP), which includes the installation-wide safety and health plan (SHP) (IT, 2002).

Site Description and History

The Choccolocco Corridor Ranges include the following four primary sets of ranges and their associated parcels:

- Former Range 40, Parcel 94Q; and Range, Choccolocco Corridor, Parcel 146Q
- Former Range 41, Parcel 95Q; and Impact Area, Parcel 131Q-X
- Former Range 42, Parcel 96Q; Range, Choccolocco Corridor, Parcel 145Q-X; and Impact Area, Choccolocco Corridor, Parcel 148Q-X
- Former Range 43, Parcel 97Q; Range, Choccolocco Corridor, Parcel 144Q-X; and Impact Area, Choccolocco Corridor, Parcel 147Q-X.

The Choccolocco Corridor Ranges are located east of the Choccolocco Mountains in the northwestern portion of the Choccolocco Corridor east of the FTMC Main Post (Figure 1). The Choccolocco Corridor, which is currently managed by the Alabama Forestry Commission, was leased by the U.S. government from the State of Alabama from 1941 until 1998.

The information presented herein was compiled from the *Final Environmental Baseline Survey, Fort McClellan, Alabama*, (EBS) (Environmental Science and Engineering, Inc. [ESE], 1998) and the *Archives Search Report, Fort McClellan, Anniston, Alabama* (ASR) (USACE, 2001).

Former Range 40, Parcel 94Q; and Range, Parcel 146Q. Former Range 40, Parcel 94Q, and Range, Choccolocco Corridor, Parcel 146Q overlap and include approximately 125 acres. Former Range 40, Parcel 94Q, a former small arms range, is described in the ASR (USACE, 2001) as 30 acres in size (EBS map shows a parcel of 25 acres). Interviews with former FTMC personnel indicated that Former Range 40, Parcel 94Q, was used for small arms training during World War II, the Korean War, and the Vietnam War.

Range, Choccolocco Corridor, Parcel 146Q, identified in the EBS as approximately 102 acres in size, is a presumed small arms range. This parcel overlaps with Parcel 94Q. A portion of the southeastern corner of Parcel 146Q extends beyond the FTMC Choccolocco Corridor boundary to the south. The Environmental Photographic Interpretation Center (EPIC) reports that this range appears to be active in aerial photographs dated 1949, 1954, and 1972 (ESE, 1998).

Former Range 41, Parcel 95Q; and Impact Area, Parcel 131Q-X. The area of Parcels 95Q and 131Q-X is approximately 12 acres. Former Range 41, Parcel 95Q, is 8.5 acres in size. There are conflicting reports of the dates of use for Parcel 95Q, but the area was most likely active during the 1960s and 1970s. The history of use for Former Range 41 is unclear. The range appeared on 1966 and 1971 historical maps, which would coincide with reports from long-time FTMC personnel who indicate that this area was a small arms range during the Vietnam War era (ESE, 1998). The ASR indicates that Former Range 41 was built during the Vietnam War, was listed as a "Battle Drill & Assault Range," probably did not include live fire, and was abandoned by 1974 (USACE, 2001). Expended M-16 rifle blanks, smoke grenades, and 40-millimeter target practice grenade cases were found on this range, as indicated in the ASR. Parcel 131Q-X is described as a former impact area within the Range 40 area. Parcel 131Q-X is 4.4 acres in size (ESE, 1998).

Former Range 42, Parcel 96Q; Range, Parcel 145Q-X; and Impact Area, Parcel 148Q-X. The ASR states that Former Range 42, Parcel 96Q, was built during the Vietnam War era and was known as the "Squad Defense Range" (USACE, 2001). However, some FTMC personnel remember the area being used during World War II and the Korean War. According to the ASR, the range was abandoned by 1974. Former Range 42 is 23.8 acres and was probably used during the 1960s and 1970s.

Range, Choccolocco Corridor, Parcel 145Q-X, is approximately 44 acres in size. The southern boundary of Parcel 145Q-X overlaps Former Range 41, Parcel 95Q. Parcel 145Q-X was identified by EPIC and appears to be active in EPIC aerial photo composites dated 1949, 1954, and 1972. The EBS describes Impact Area, Choccolocco Corridor, Parcel 148Q-X, as an impact area that occupies 5.8 acres within Parcels 96Q and 145Q-X.

Former Range 43, Parcel 97Q; Range, Parcel 144Q-X; and Impact Area, Parcel 147Q-X. Former Range 43, Parcel 97Q, is identified as a former small arms range. The EBS identifies Range 43 as approximately 4 acres in size (in the ASR, Range 43 is reported as approximately 7 acres). Approximately two-thirds of Parcel 97Q is located within the boundaries of Range, Choccolocco Corridor, Parcel 144Q-X. The Parcel 97Q range was previously designated as Range 43 and Range 3, but the dimensions of these previous ranges are not documented in the EBS. Interviews with long time FTMC personnel indicated that the Parcel 97Q range was used for small arms training during World War II, the Korean War, and the Vietnam War. Evidence of smoke training has also been observed in the vicinity of this former range (ESE, 1998).

Range, Choccolocco Corridor, Parcel 144Q-X, identified as a former range, is approximately 19 acres in size. Parcel 144Q-X encompasses about two thirds of Parcel 97Q and most of Impact Area, Choccolocco Corridor, Parcel 147Q-X. This range appears to be active in EPIC aerial photographs dated 1949, 1954, and 1972 (ESE, 1998).

Impact Area, Parcel 147Q-X, is approximately 3 acres in size. It is not known which range is associated with this impact area. This parcel is located within the boundaries of Parcel 144Q-X.

Previous Investigations. Based on the results of site investigations conducted by Shaw at the Choccolocco Corridor Ranges, past training operations at these ranges have adversely impacted the environment. Specifically, soils at these sites are contaminated with certain metals (e.g., lead) at levels that may pose an unacceptable risk to human health and the environment (Shaw, 2003a,b,c,d).

Shaw initiated remedial investigation activities at these ranges to determine the nature and extent of the metals contamination in soil. As part of the remedial investigation, Shaw conducted x-ray fluorescence screening and sampling of surface soil for lead at over 700 locations to better define the extent of lead contamination. In addition, fixed-base sampling was conducted.

2.0 Sign Location Survey

The sign locations will be marked using wooden stakes and surveyed using global positioning system or conventional civil survey techniques to obtain the horizontal coordinates. Horizontal coordinates will be referenced to the U.S. State Plane Coordinate System, Alabama East Zone, North American Datum 1983.

3.0 Sign Installation

Signs will be installed at the locations proposed on Figure 2 and described in Table 1. The sign posts will be 6 feet in length and made of high tensile strength galvanized 12-gauge steel. The "U-channel" posts will be driven to a depth of 24 inches below ground surface as shown on Figure 3. The sign posts will be installed using a hand-held post driver. Holes of 3/8-inch diameter spaced on 1-inch centers will accommodate sign attachment. The signs will be oriented such that they face away from the ranges.

Signage. The signs will be made of 0.040 aluminum with a white reflective background. The dimensions of each sign will be 10 inches wide and 14 inches long, as shown on Detail 1 of Figure 3. The signs will be custom-screened printing with black lettering: "KEEP OUT — RESTRICTED AREA," as shown on Detail 1. The aluminum signs will be attached to the steel posts using one-way tamper-resistant hardware (bolts 2-inch-long x 5/16-inch diameter with fluted nuts). The hardware will be fastened using a nonstandard special tool that further prevents possible tampering.

4.0 Site-Specific Health and Safety Plan Amendment

This plan will be used in conjunction with the SAP, which includes the SHP as Appendix A (IT, 2002). Safety and health plan requirements for the sign installation are provided in SHP. Activity hazard analyses for this effort are described in Appendix A of the SAP. Additional activity hazard analysis is not required because the proposed activities and equipment associated with this task have been adequately addressed in Appendix A of the SAP. Documentation is provided in Attachment 1 of this plan.

Foster Wheeler Environmental Corporation conducted an ordnance and explosives (OE) engineering evaluation/cost analysis (EE/CA) investigation in 2002 and 2003. The purpose of the EE/CA was to investigate the nature and extent of unexploded ordnance (UXO) and OE in

Charlie Area (which includes Choccolocco Corridor) on FTMC. Based on the results of the field work, USACE-Huntsville Center has issued an internal draft EE/CA report that states that neither UXO nor OE was found within Choccolocco Corridor. Subsequently, the USACE-Huntsville Center issued a memorandum on 20 March 2003 to the USACE-Mobile District stating that UXO avoidance is no longer needed for Choccolocco Corridor of FTMC (Attachment 2).

5.0 Schedule

The anticipated schedule for this task is:

- By 4 June 2004, survey and stake 116 sign locations
- By 25 June 2004, install signs at surveyed and staked locations.

6.0 References

Environmental Science and Engineering, Inc. (ESE), 1998, ***Final Environmental Baseline Survey, Fort McClellan, Alabama***, prepared for U.S. Army Environmental Center, Aberdeen Proving Ground, Maryland, January.

IT Corporation (IT), 2002, ***Draft Installation-Wide Sampling and Analysis Plan, Fort McClellan, Calhoun County, Alabama***, Revision 3, February.

Shaw Environmental, Inc. (Shaw), 2003a, ***Draft Site Investigation Report for Former Range 40, Parcel 94Q, and Range, Choccolocco Corridor, Parcel 146Q, Fort McClellan, Calhoun County, Alabama***, April.

Shaw Environmental, Inc. (Shaw), 2003b, ***Draft Site Investigation Report for Former Range 41, Parcel 95Q and Impact Area, Choccolocco Corridor, Parcel 131Q-X, Fort McClellan, Calhoun County, Alabama***, April.

Shaw Environmental, Inc. (Shaw), 2003c, ***Draft Site Investigation Report for Former Range 42, Parcel 96Q; Range, Choccolocco Corridor, Parcel 145Q-X, and Impact Area, Choccolocco Corridor, Parcel 148Q-X, Fort McClellan, Calhoun County, Alabama***, April.

Shaw Environmental, Inc. (Shaw), 2003d, ***Draft Site Investigation Report for Former Range 43, Parcel 97Q; Range, Choccolocco Corridor, Parcel 144Q-X, and Impact Area, Choccolocco Corridor, Parcel 147Q-X, Fort McClellan, Calhoun County, Alabama***, April.

U.S. Army Corps of Engineers (USACE), 2001, ***Archives Search Report, Maps, Fort McClellan, Anniston, Alabama***, Revision 1, September.

Table 1

Proposed Sign Locations
Choccolocco Corridor Ranges
Fort McClellan, Calhoun County, Alabama

Sign Location	Northing	Easting
HR-CC-SIGN001	1177203.11	693882.51
HR-CC-SIGN002	1177178.81	694068.60
HR-CC-SIGN003	1177121.64	694266.07
HR-CC-SIGN004	1176990.01	694342.86
HR-CC-SIGN005	1176914.33	694192.62
HR-CC-SIGN006	1176778.31	694381.31
HR-CC-SIGN007	1176795.44	694239.68
HR-CC-SIGN008	1176753.08	694224.44
HR-CC-SIGN009	1176606.88	694181.32
HR-CC-SIGN010	1176555.63	694435.06
HR-CC-SIGN011	1176410.56	694326.27
HR-CC-SIGN012	1176463.26	694155.02
HR-CC-SIGN013	1176425.05	694103.65
HR-CC-SIGN014	1176302.50	694069.35
HR-CC-SIGN015	1176301.18	694107.55
HR-CC-SIGN016	1176232.67	694181.37
HR-CC-SIGN017	1176100.90	694048.33
HR-CC-SIGN018	1176091.67	694007.44
HR-CC-SIGN019	1176004.90	693840.73
HR-CC-SIGN020	1175936.39	693916.99
HR-CC-SIGN021	1175914.88	693948.27
HR-CC-SIGN022	1175920.75	694136.94
HR-CC-SIGN023	1175835.67	694265.98
HR-CC-SIGN024	1175808.29	694435.10
HR-CC-SIGN025	1175775.04	694587.60
HR-CC-SIGN026	1175759.40	694742.05
HR-CC-SIGN027	1175766.24	694918.01
HR-CC-SIGN028	1175642.05	695000.13
HR-CC-SIGN029	1175490.48	694875.98
HR-CC-SIGN030	1175423.01	694703.93
HR-CC-SIGN031	1175432.79	694553.38
HR-CC-SIGN032	1175485.59	694378.40
HR-CC-SIGN033	1175467.01	694221.99
HR-CC-SIGN034	1175436.69	694026.43
HR-CC-SIGN035	1175502.48	693800.44
HR-CC-SIGN036	1175615.64	693837.76
HR-CC-SIGN037	1175772.11	693889.62
HR-CC-SIGN038	1175807.31	693865.18
HR-CC-SIGN039	1175667.48	693815.32

Table 1

Proposed Sign Locations
Choccolocco Corridor Ranges
Fort McClellan, Calhoun County, Alabama

Sign Location	Northing	Easting
HR-CC-SIGN040	1175512.78	693764.79
HR-CC-SIGN041	1175357.46	693726.76
HR-CC-SIGN042	1175349.53	693759.24
HR-CC-SIGN043	1175256.81	693921.59
HR-CC-SIGN044	1175222.73	693901.79
HR-CC-SIGN045	1175133.49	694043.50
HR-CC-SIGN046	1175064.29	694207.14
HR-CC-SIGN047	1174991.36	694337.27
HR-CC-SIGN048	1174904.52	694499.43
HR-CC-SIGN049	1174853.25	694655.07
HR-CC-SIGN050	1174780.04	694764.29
HR-CC-SIGN051	1174678.10	694810.41
HR-CC-SIGN052	1174544.16	694735.28
HR-CC-SIGN053	1174583.60	694562.71
HR-CC-SIGN054	1174640.90	694449.64
HR-CC-SIGN055	1174679.59	694285.25
HR-CC-SIGN056	1174701.17	694125.32
HR-CC-SIGN057	1174829.15	693946.05
HR-CC-SIGN058	1175008.47	693906.58
HR-CC-SIGN059	1175179.95	693716.47
HR-CC-SIGN060	1175191.83	693681.56
HR-CC-SIGN061	1174795.45	693571.38
HR-CC-SIGN062	1174760.35	693599.52
HR-CC-SIGN063	1174654.30	693531.38
HR-CC-SIGN064	1174649.75	693567.80
HR-CC-SIGN065	1174629.71	693684.27
HR-CC-SIGN066	1174545.93	693780.82
HR-CC-SIGN067	1174461.24	693949.24
HR-CC-SIGN068	1174366.53	694116.74
HR-CC-SIGN069	1174149.80	694130.40
HR-CC-SIGN070	1174216.28	693966.53
HR-CC-SIGN071	1174270.01	693818.14
HR-CC-SIGN072	1174382.02	693625.15
HR-CC-SIGN073	1174519.53	693520.46
HR-CC-SIGN074	1174519.53	693485.86
HR-CC-SIGN075	1174251.41	693445.34
HR-CC-SIGN076	1174117.53	693463.23
HR-CC-SIGN077	1174096.10	693493.57
HR-CC-SIGN078	1174021.13	693653.30
HR-CC-SIGN079	1173855.99	693738.07

Table 1

Proposed Sign Locations
Choccolocco Corridor Ranges
Fort McClellan, Calhoun County, Alabama

Sign Location	Northing	Easting
HR-CC-SIGN080	1173778.34	693973.64
HR-CC-SIGN081	1173717.64	694101.24
HR-CC-SIGN082	1173619.45	693995.95
HR-CC-SIGN083	1173782.79	693588.11
HR-CC-SIGN084	1173895.27	693456.10
HR-CC-SIGN085	1173914.01	693423.08
HR-CC-SIGN086	1173408.52	693176.90
HR-CC-SIGN087	1173205.28	693270.36
HR-CC-SIGN088	1173102.63	693630.94
HR-CC-SIGN089	1173036.58	693433.87
HR-CC-SIGN090	1172912.61	693863.63
HR-CC-SIGN091	1172820.14	693576.14
HR-CC-SIGN092	1172988.83	693204.33
HR-CC-SIGN093	1172887.21	693018.42
HR-CC-SIGN094	1172992.88	692859.90
HR-CC-SIGN095	1173206.29	692767.45
HR-CC-SIGN096	1173355.67	692913.79
HR-CC-SIGN097	1173476.60	693022.49
HR-CC-SIGN098	1173953.28	693232.07
HR-CC-SIGN099	1174116.63	693263.30
HR-CC-SIGN100	1174238.91	693256.16
HR-CC-SIGN101	1174359.42	693361.51
HR-CC-SIGN102	1174571.43	693296.46
HR-CC-SIGN103	1174763.57	693254.58
HR-CC-SIGN104	1174842.80	693433.01
HR-CC-SIGN105	1174915.52	693122.55
HR-CC-SIGN106	1174874.94	693013.53
HR-CC-SIGN107	1175016.97	693006.94
HR-CC-SIGN108	1175444.62	693606.30
HR-CC-SIGN109	1175925.33	693720.09
HR-CC-SIGN110	1176102.83	693656.23
HR-CC-SIGN111	1176297.23	693733.45
HR-CC-SIGN112	1176464.58	693750.62
HR-CC-SIGN113	1176624.02	693630.75
HR-CC-SIGN114	1176754.47	693730.81
HR-CC-SIGN115	1176853.30	693850.74
HR-CC-SIGN116	1177040.41	693837.51

Horizontal coordinates referenced to the U.S. State Plane Coordinate System, Alabama East Zone, North American Datum 1983. Coordinates are proposed locations only. Actual locations are subject to site suitability and may be placed a few feet away from proposed location.

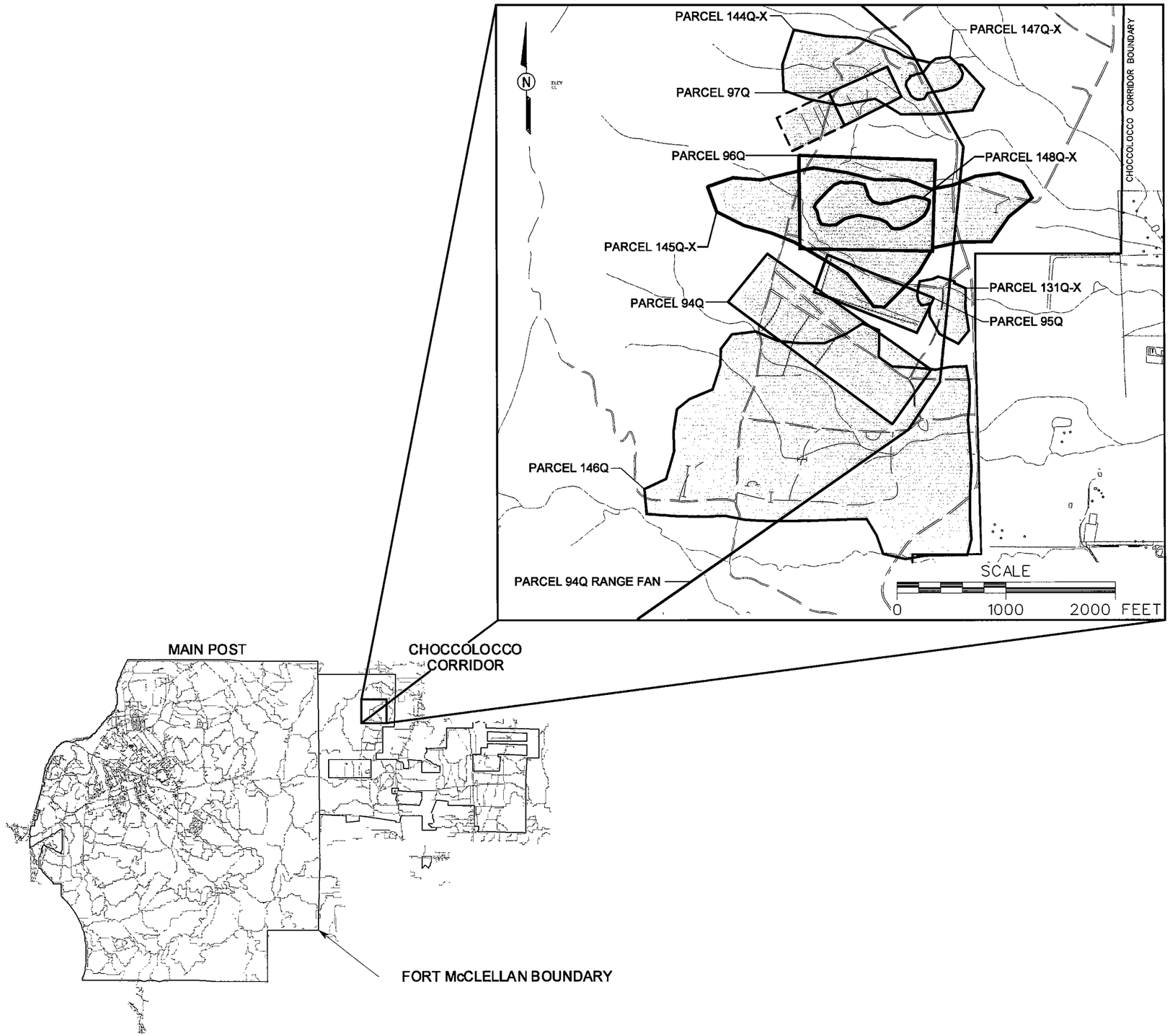

LEGEND

- UNIMPROVED ROAD
- PARCEL BOUNDARY
- SURFACE DRAINAGE / CREEK
- TRENCH
- BERM
- ROW OF WOOD FRAMED TARGET BOXES
- FENCE

FIGURE 1
SITE LOCATION MAP
CHOCCOLOCCO CORRIDOR RANGES
PARCELS 94Q, 95Q, 96Q, AND 97Q

U. S. ARMY CORPS OF ENGINEERS
MOBILE DISTRICT
FORT McCLELLAN
CALHOUN COUNTY, ALABAMA
Contract No. DACA21-96-D-0018

Shaw™ Shaw Environmental, Inc.

STARTING DATE: 05/07/04	DATE LAST REV.:	DRAFT. CHCK. BY:	INITIATOR: G. SISCO
DRAWN BY: D. BOMAR	DRAWN BY:	ENGR. CHCK. BY: S. MORAN	PROJ. MGR.: J. YACOUB
			DWG. NO.: ...\796887es.819
			PROJ. NO.: 796887

5/7/2004 9:31:55 AM
c:\cadd\design\796887es.819
dbomar

30 X 42

dbomar 5/7/2004
c:\cadd\design\796887es.818 8:37:40 AM

STARTING DATE: 05/06/04	DATE LAST REV.:	DRAFT. CHCK. BY:	INITIATOR: G. SISCO	DWG. NO.: ...\796887es.818
DRAWN BY: D. BOMAR	DRAWN BY:	ENGR. CHCK. BY: S. MORAN	PROJ. MGR.: J. YACOUB	PROJ. NO.: 796887

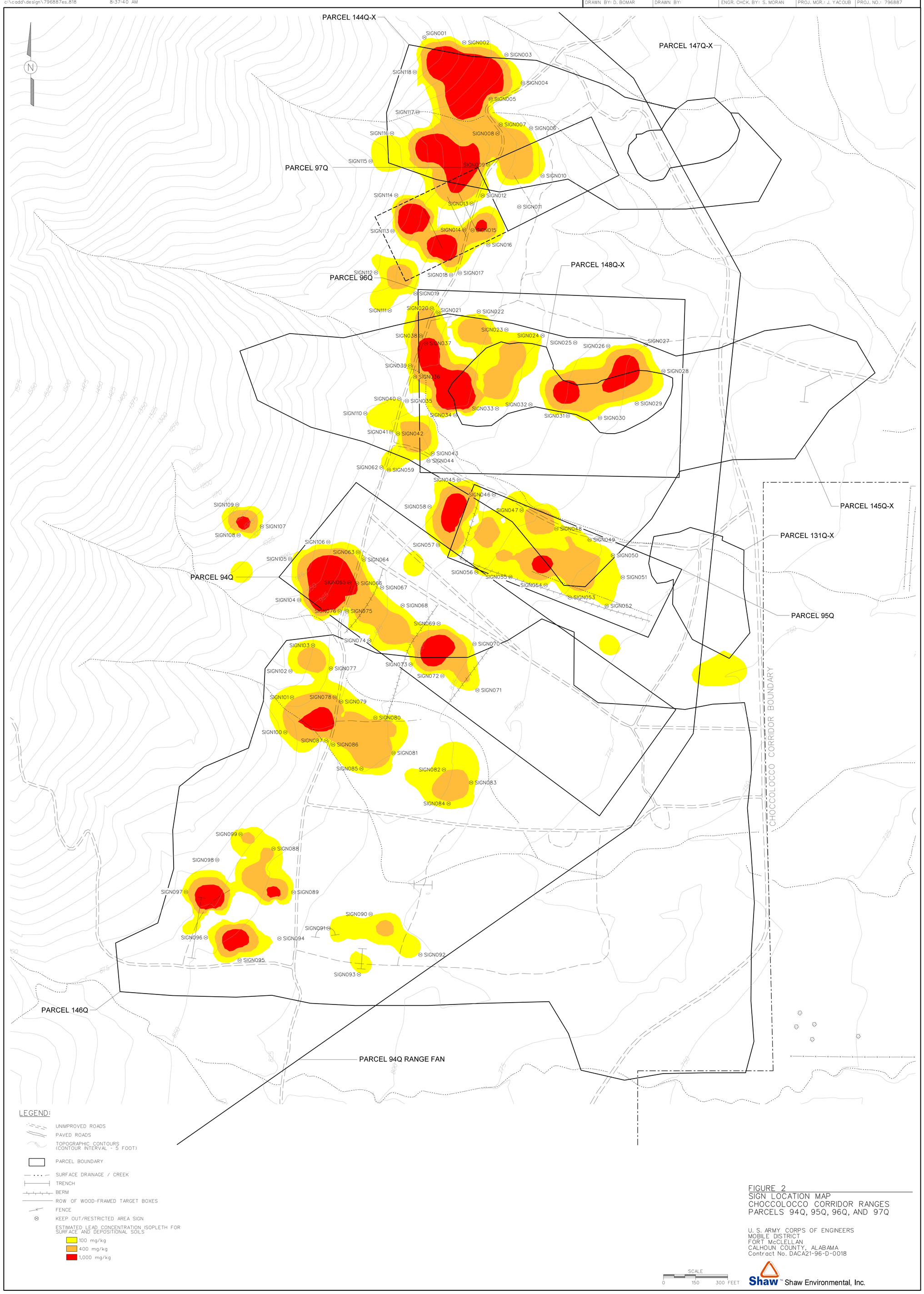

FIGURE 2
SIGN LOCATION MAP
CHOCCOLOCCO CORRIDOR RANGES
PARCELS 94Q, 95Q, 96Q, AND 97Q

U. S. ARMY CORPS OF ENGINEERS
MOBILE DISTRICT
FORT McCLELLAN
CALHOUN COUNTY, ALABAMA
Contract No. DACA21-96-D-0018

Shaw™ Shaw Environmental, Inc.

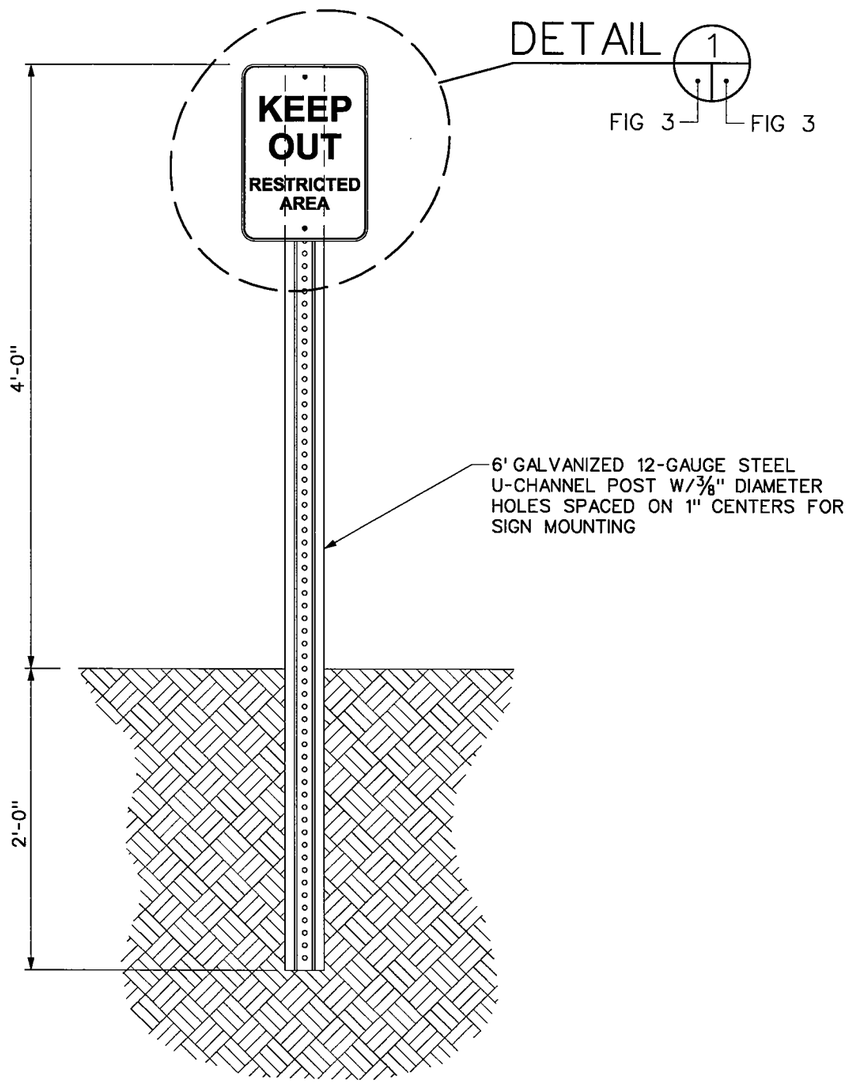

DETAIL TYPICAL SIGN INSTALLATION

SCALE: 1"=1'-0"

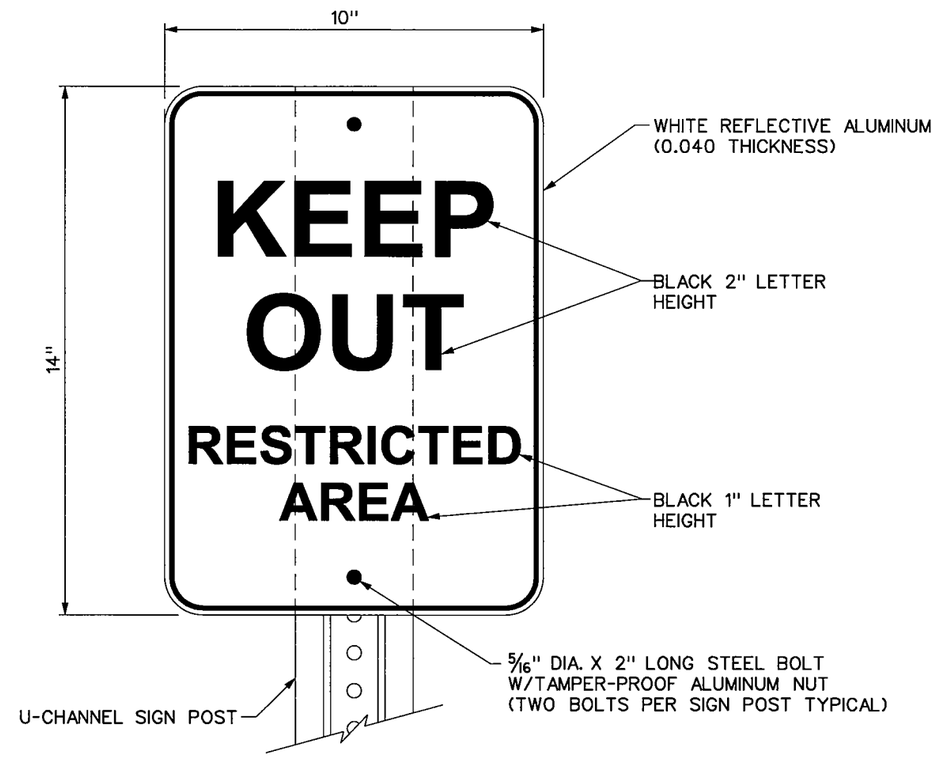

DETAIL SIGN LAYOUT AND MOUNTING TO POST

SCALE: 3"=1'-0"

1

FIG 3 FIG 3

SCALE: 1"=1'-0"

0 1 2 FEET

FIGURE 3
SIGN INSTALLATION DETAIL
CHOCCOLOCCO CORRIDOR
PARCELS 94Q, 95Q, 96Q, AND 97Q

U. S. ARMY CORPS OF ENGINEERS
MOBILE DISTRICT
FORT McCLELLAN
CALHOUN COUNTY, ALABAMA
Contract No. DACA21-96-D-0018

Shaw™ Shaw Environmental, Inc.

DWG. NO796886-cc-001.dgn | PROJ. NO.: 796886
INITIATOR: G. SWANSON | PROJ. MGR.: S. MORAN
DRAFT. CHCK. BY: G. SISCO | ENGR. CHCK. BY: G. SWANSON
DATE LAST REV.: | DRAWN BY:
STARTING DATE: 05/06/04 | DRAWN BY: J. WATERS
5/7/2004 8:24:37 AM
jwaters c:\cadd\design\796886-cc-001.dgn

ATTACHMENT 1

SITE-SPECIFIC HEALTH AND SAFETY PLAN AMENDMENT DOCUMENTATION

Shaw® Shaw Environmental, Inc.

Site Specific Safety and Health Plan
Amendment Documentation

Project No: 796887 **Date:** May 7, 2004

Project Name: Fort McClellan, Calhoun County, Alabama

Amendment Revises: Installation-Wide SHP

Reason for Amendment: Task not included in original scope of work

Amendment:

Amend Section 3.1 Scope of Work to include:

Installation of sign posts and signs
Amend Table 3-1 to include the attached activity hazard analysis (AHA)

Rationale for Amendment:

AHA Table 3-1 in the Installation-Wide SHP did not capture installation of posts and signs. Utilize the attached AHA for the installation of posts and signs at Choccolocco Corridor Ranges.

NOTE: Unexploded ordnance and munitions of explosive concern are not anticipated to be encountered during this task, however, if any suspicious items are encountered, do not disturb the item, contact the UXO safety officer immediately.

Completed By: 5-7-04 **Approved By:** Stephen G. Moran for J. Yacoub
H&S Coordinator Project Management

ACTIVITY HAZARD ANALYSIS
SIGN AND POST INSTALLATION

Activity	Potential Hazards	Recommended Controls
Install sign post and signs	Slip, trip and fall hazards	Determine best access route before transporting equipment.
		Good housekeeping, keep work area picked up and clean as feasible. Continually inspect the work area for slip, trip and fall hazards.
		Look before you step, insure safe and secure footing.
	Heavy lifting	Use proper lifting techniques. Lifts greater than 60 lbs. require assistance or mechanical equipment; size-up lift. Recommend wearing a back support if possible.
	Falling objects	Hard hat, stay alert and clear of materials suspended overhead, steel-toed boots.
	Flying debris, dirt, dust, etc.	Use safety glasses/goggles. Ensure that eye wash is in good working order.
	Pinch points	Keep hands, fingers, and feet clear of moving/suspended materials and equipment.
		Beware of contact points.
		Stay alert at all times!
	Cut hazards	Wear adequate hand protection. Use care when handling steel posts and signs.
	Biological hazards	Inspect work area carefully and avoid placing hands and feet into concealed areas.
		Be alert for bees, spiders, snakes, ticks, and snakes.
	Heat stress/cold stress	"Site Health and Safety Plan"
	Fire	Fire extinguishers shall be suitably placed, distinctly marked, readily accessible, and maintained in a fully charged and operable condition.
		Fuel will be transported and stored in approved containers.

Activity	Potential Hazards	Recommended Controls
Install sign post and signs	Hazard communication	Label all containers as to contents and dispose of properly.
	Noise	Sound levels above 85 dBA mandates hearing protection.
	Cross-contamination and contact with potentially contaminated materials	Technicians will wear proper protective clothing and equipment to safeguard against potential contamination.
		Only qualified personnel will be in the work area.
		All personnel will follow good hygiene practices.
	Strains and sprains	Use the proper tool for the job being performed.
		Get assistance if needed.
		Avoid twisting/turning while pulling on tools, materials, etc.
	Unattended worker	"Buddy system" visual contact will be maintained between technicians during fence installation.
	Heat stress/cold stress	"Site Health and Safety Plan"
	Cut hazards	Wear adequate hand protection.
	Munitions of Explosive Concern (MEC) UXO	Do not disturb any suspicious items. Report suspicious items to the UXO safety officer immediately.
Equipment to be Used	**Inspection Requirements**	**Training Requirements**
Hand tools PPE Post hole driver Magnetometer	Visual prior to use Function Check	Tailgate Safety Meeting Site specific orientation Hazardous waste operations Hazard communication Lead Control Plan (if applicable)

ATTACHMENT 2

CEHNC-OE LETTER
DATED 20 MARCH 2003

DEPARTMENT OF THE ARMY
HUNTSVILLE CENTER, CORPS OF ENGINEERS
P.O. BOX 1600
HUNTSVILLE, ALABAMA 35807-4301

REPLY TO ATTENTION OF:

CEHNC-OE-DC

20 March 2003

MEMORANDUM FOR Commander, U.S. Army Corps of Engineers, Mobile District, ATTN: Mr. Lee Coker (EN-GE), P. O. Box 2288, Mobile, Alabama 36628-0001

SUBJECT: Ordnance and Explosives EE/CA for Charlie Area of Fort McClellan

1. The fieldwork for the Ordnance and Explosives EE/CA for the Charlie Area of Fort McClellan has been completed. The "Draft Charlie EE/CA Report" has been published and there were no UXO found within the Choccolocco Corridor. The expectation is that the recommendations of the EE/CA Report will be No Further Action for this area.

2. It is our assessment that UXO Escort is no longer needed for the Choccolocco Corridor of Fort McClellan.

3. If you have any questions, please call Dan Copeland at 256-895-1567.

JOHN C. POTTER, Ph.D., P.E.
Chief, Design Center for
Ordnance and Explosives Directorate